CITY OF SAN LUIS OBISPO

STENNER CANYON HYDROELECTRIC PLANT

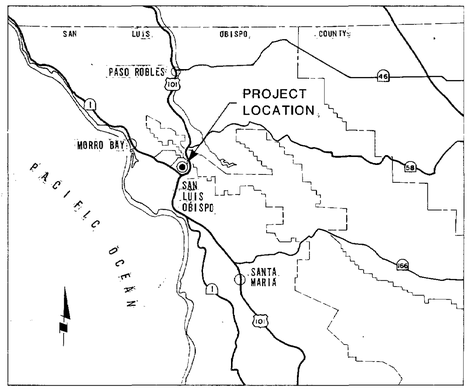

VICINITY MAP

CITY PLAN F-25C

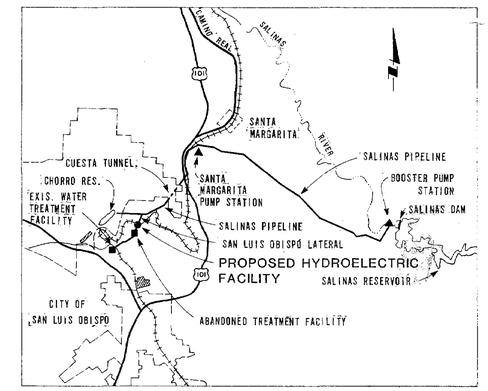

LOCATION MAP

LIST OF DRAWINGS

GENERAL

G-0.1 TITLE SHEET AND LIST OF DRAWINGS

CIVIL

C-0.1 SITE PIPING AND GRADING PLAN

MECHANICAL

M-1.1 HYDROELECTRIC BUILDING - PLAN, SECTIONS, AND 24" OUTLET PIPE PROFILE
M-1.2 VALVE BOX DETAILS
M-1.3 CUESTA TUNNEL MODIFICATIONS

STRUCTURAL

S-0.1 GENERAL NOTES AND TYPICAL DETAILS
S-1.1 HYDROELECTRIC BUILDING - PLANS AND SECTIONS
S-1.2 VALVE BOX AND METER VAULT - PLANS, SECTIONS, AND DETAILS

ELECTRICAL

E-0.1 ELECTRICAL SYMBOLS AND SCHEDULES
E-0.2 SINGLE LINE DIAGRAM
E 0.3 ELECTRICAL SITE PLAN AND DETAILS
E-1.1 HYDROELECTRIC BUILDING POWER PLAN
E-1.2 HYDROELECTRIC BUILDING LIGHTING PLAN AND CONTROL WIRING DIAGRAMS

NO.	DATE	REVISIONS	BY
1	1/15/84	REVISED FOR REBID	EGR

PROJECT NO.	3832		DATE
DESIGNED BY	CTW		
DRAWN BY	RLP		
CHECKED BY			
ENGINEER	[illegible]		
REGISTRATION NO.	19981	DATE 27 Feb 81	

ENGINEERING-SCIENCE
DESIGN • RESEARCH • PLANNING
4611 Teller Avenue • Newport Beach, California 92660 • 714/851-9891
OFFICES IN PRINCIPAL CITIES

STENNER CANYON HYDROELECTRIC PROJECT

SAN LUIS OBISPO, CALIFORNIA

HYDROELECTRIC PLANT

TITLE SHEET AND LIST OF DRAWINGS

SCALE

SHEET NO. G-0.1

FILE NO.

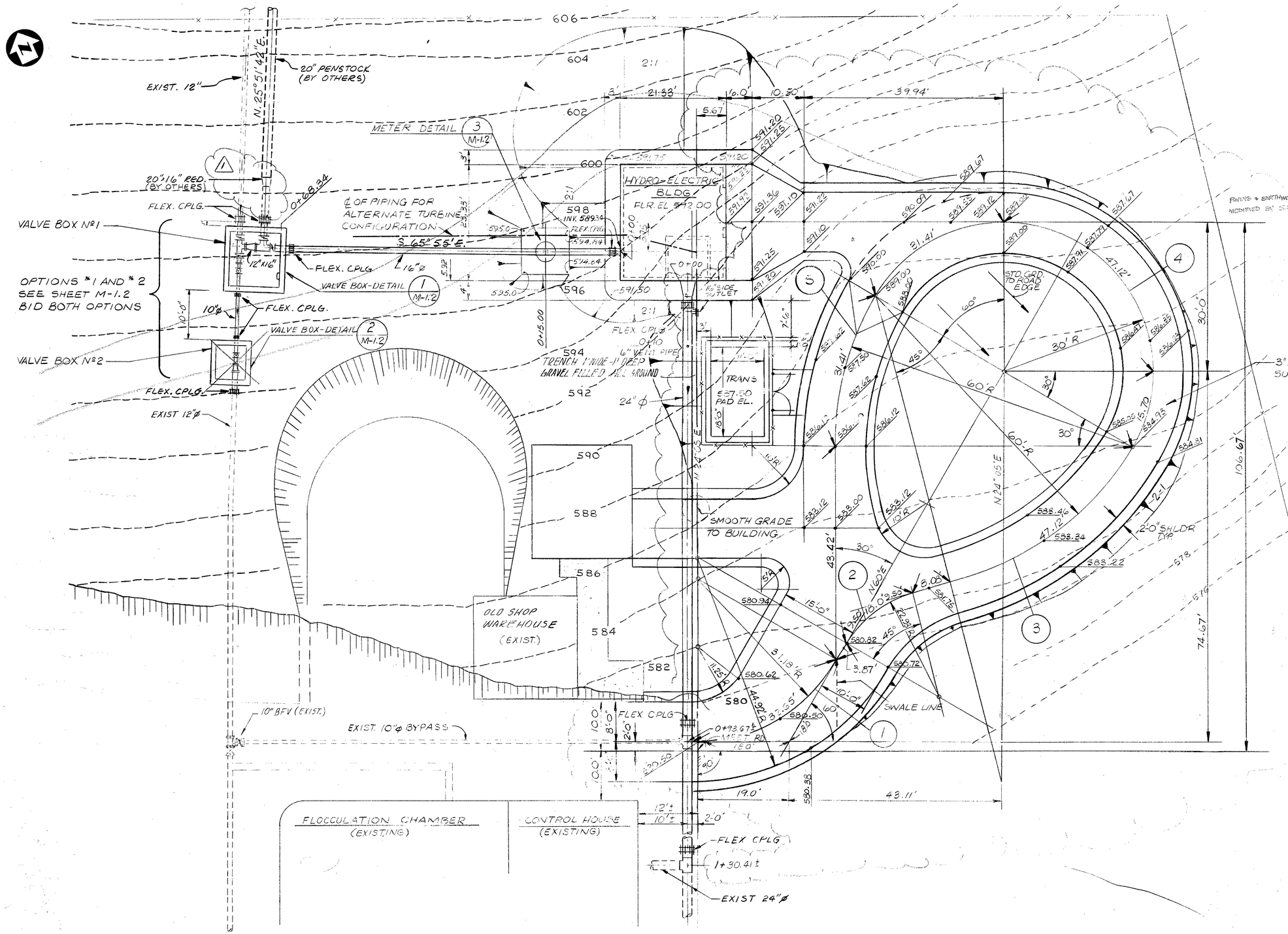

CURVE DATA

1. Δ = 60°, R = 31.18', T = 18.00', L = 32.65'
2. Δ = 45°, R = 22.93', T = 9.50', L = 18.00'
3. Δ = 45°, R = 60', T = 24.85', L = 47.12'
4. Δ = 180°, R = 30', L = 94.25'
5. Δ = 30°, R = 60', T = 16.07', L = 31.41'

NOTE:

1. VERIFY EXISTING PIPE LOCATIONS IN FIELD.

NO.	DATE	REVISIONS	BY
1	1/15/84	REVISED FOR REBID	EGR

		DATE
PROJECT NO.	3832	
DESIGNED BY	CTW	
DRAWN BY	A.C., RLP	
CHECKED BY		
ENGINEER	[signature]	
REGISTRATION NO.	19981	DATE 24 JUL 84

ENGINEERING-SCIENCE
DESIGN • RESEARCH • PLANNING
4611 Teller Avenue • Newport Beach, California • 92660 • 714/851-9891
OFFICES IN PRINCIPAL CITIES

ES

STENNER CANYON HYDROELECTRIC PROJECT

SAN LUIS OBISPO, CALIFORNIA

HYDROELECTRIC PLANT

SITE PIPING AND GRADING PLAN

SCALE 1" = 10'

SHEET NO. C-0.1

FILE NO.

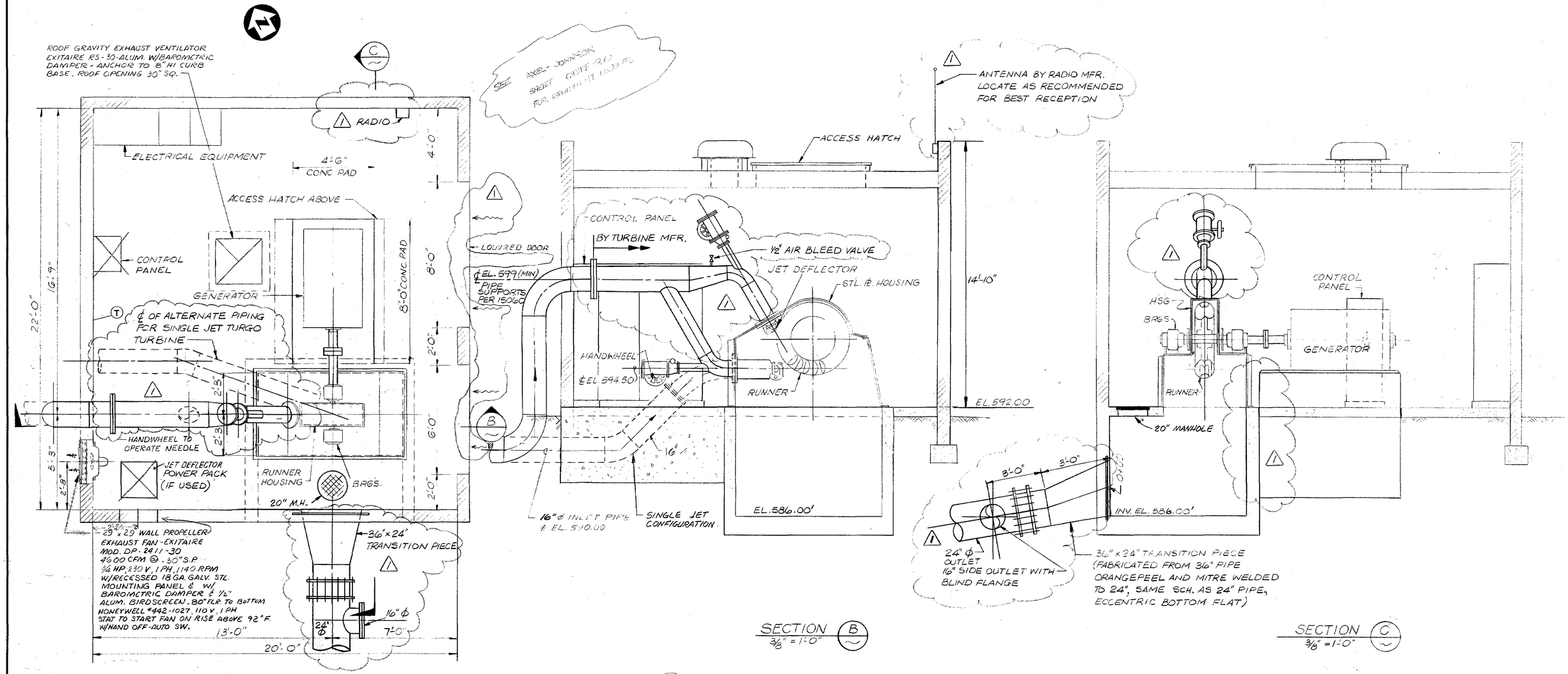

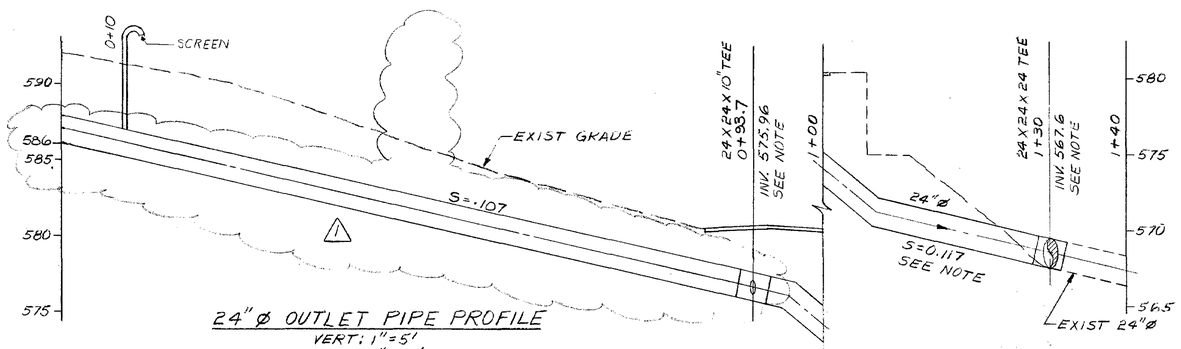

24" ϕ OUTLET PIPE PROFILE
VERT: 1" = 5'
HORIZ: 1" = 10'

NOTE:
CONTRACTOR TO FIELD VERIFY.

NO.	DATE	REVISIONS	BY
1	1/15/84	REVISE FOR REBID	EGR

PROJECT NO. 3832		DATE
DESIGNED BY CTW		
DRAWN BY RLP		
CHECKED BY		
ENGINEER		
REGISTRATION NO. 19981	DATE 28 JUNE 81	

ENGINEERING-SCIENCE
DESIGN • RESEARCH • PLANNING
4611 Teller Avenue • Newport Beach, California 92660 • 714/851-9891
OFFICES IN PRINCIPAL CITIES

STENNER CANYON HYDROELECTRIC PROJECT

SAN LUIS OBISPO, CALIFORNIA

HYDROELECTRIC PLANT

HYDROELECTRIC BUILDING - PLAN, SECTIONS AND 24" OUTLET PIPE PROFILE

SCALE 3/8"=1'-0"

SHEET NO. M-1.1

FILE NO.

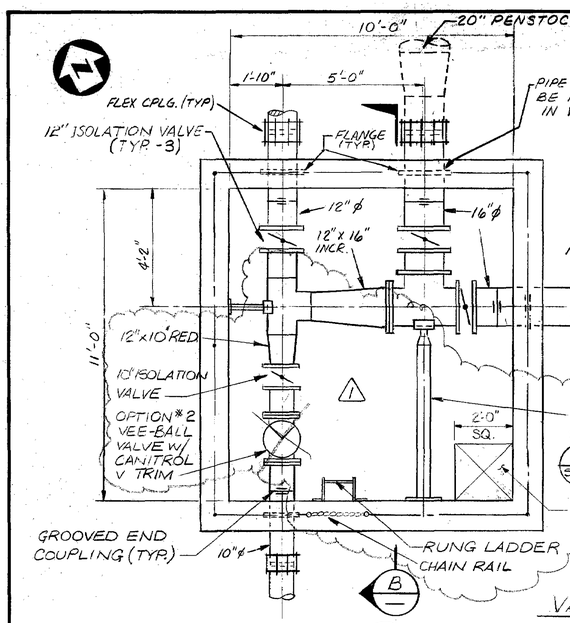

PLAN (A) 3/8" = 1'-0"

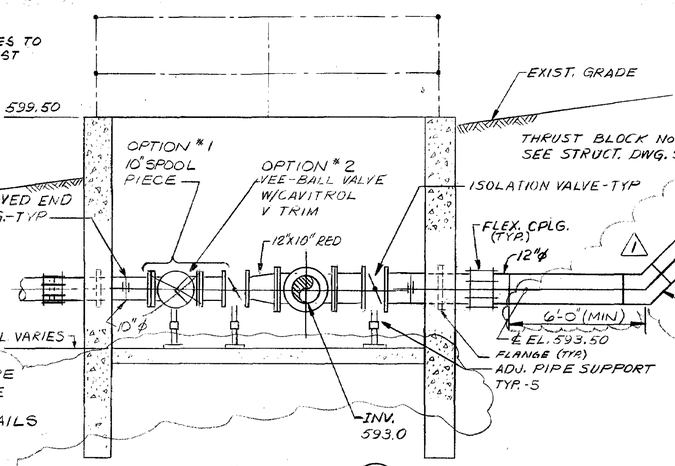

SECTION (B) 3/8" = 1'-0"

VALVE BOX Nº1 DETAIL (1 / C-0.1)

BID BOTH OPTIONS #1 AND #2

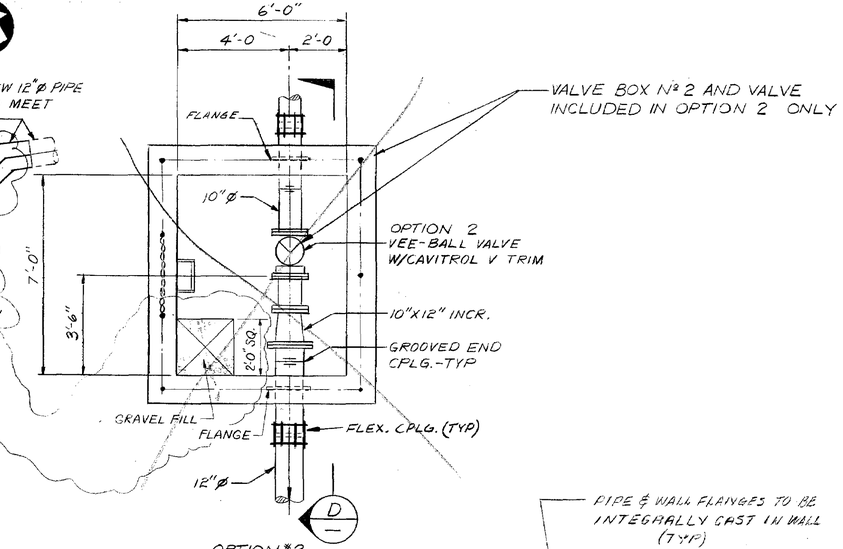

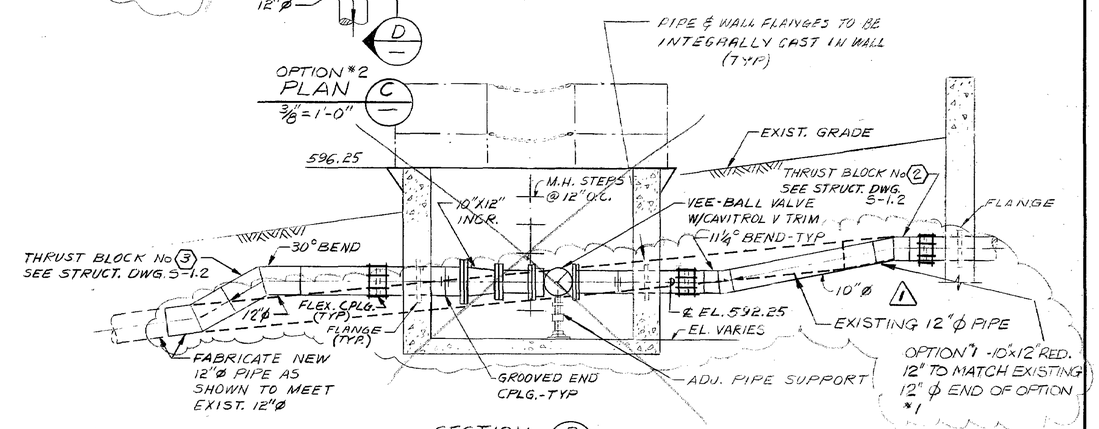

SECTION (D) 3/8" = 1'-0"

OPTION #2: VALVE BOX Nº2 DETAIL (2 / C-0.1)

OPTION #2 CONSTRUCT AS SHOWN

BID BOTH OPTIONS #1 AND #2

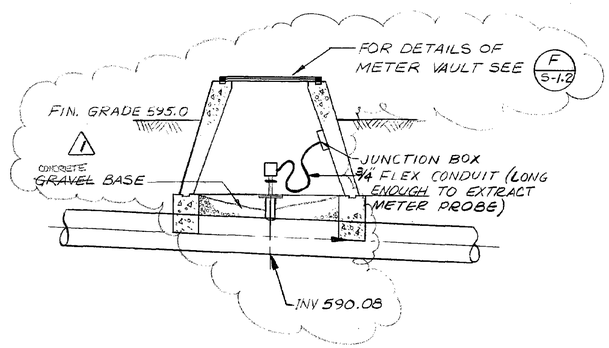

SECTION (F) 3/8" = 1'-0"

METER DETAIL (3 / C-0.1)

NO.	DATE	REVISIONS	BY
1	1/15/84	REVISED FOR REBID	EGR

		DATE
PROJECT NO.	3832	
DESIGNED BY	C.T.W.	
DRAWN BY	RLP	
CHECKED BY		
ENGINEER	R.H. Duncan	
REGISTRATION NO.	19981	DATE 29 JUNE 81

ENGINEERING-SCIENCE
DESIGN • RESEARCH • PLANNING
4611 Teller Avenue • Newport Beach, California 92660 • 714/851-9891
OFFICES IN PRINCIPAL CITIES

ES

STENNER CANYON HYDROELECTRIC PROJECT

SAN LUIS OBISPO, CALIFORNIA

HYDROELECTRIC PLANT

VALVE BOX DETAILS

SCALE: AS SHOWN

SHEET NO. M-1.2

FILE NO.

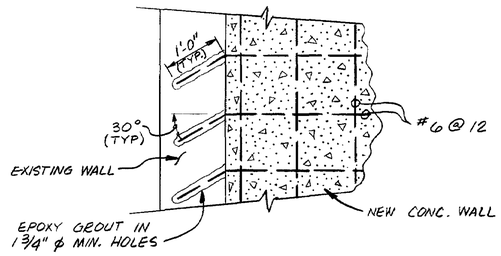

DETAIL 1
NO SCALE

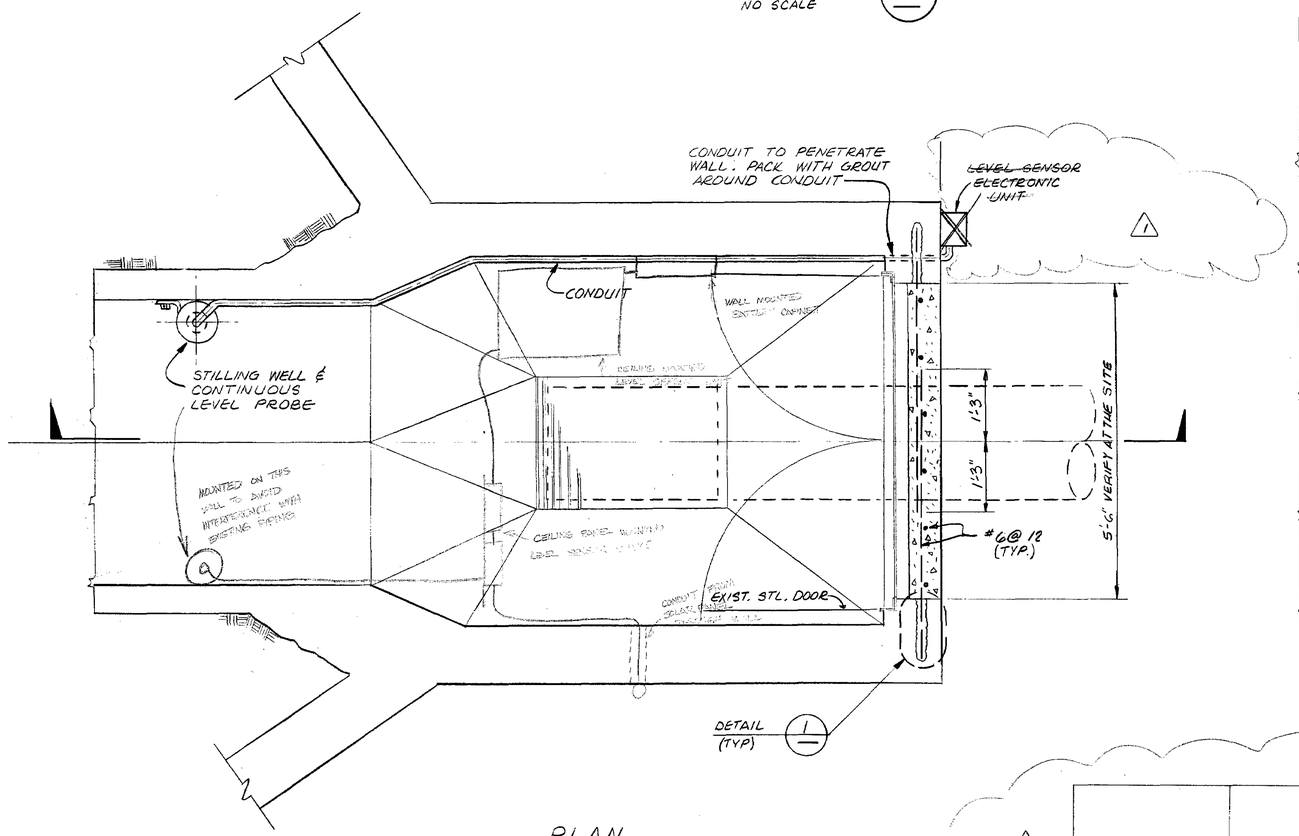

PLAN
3/4" = 1'-0"

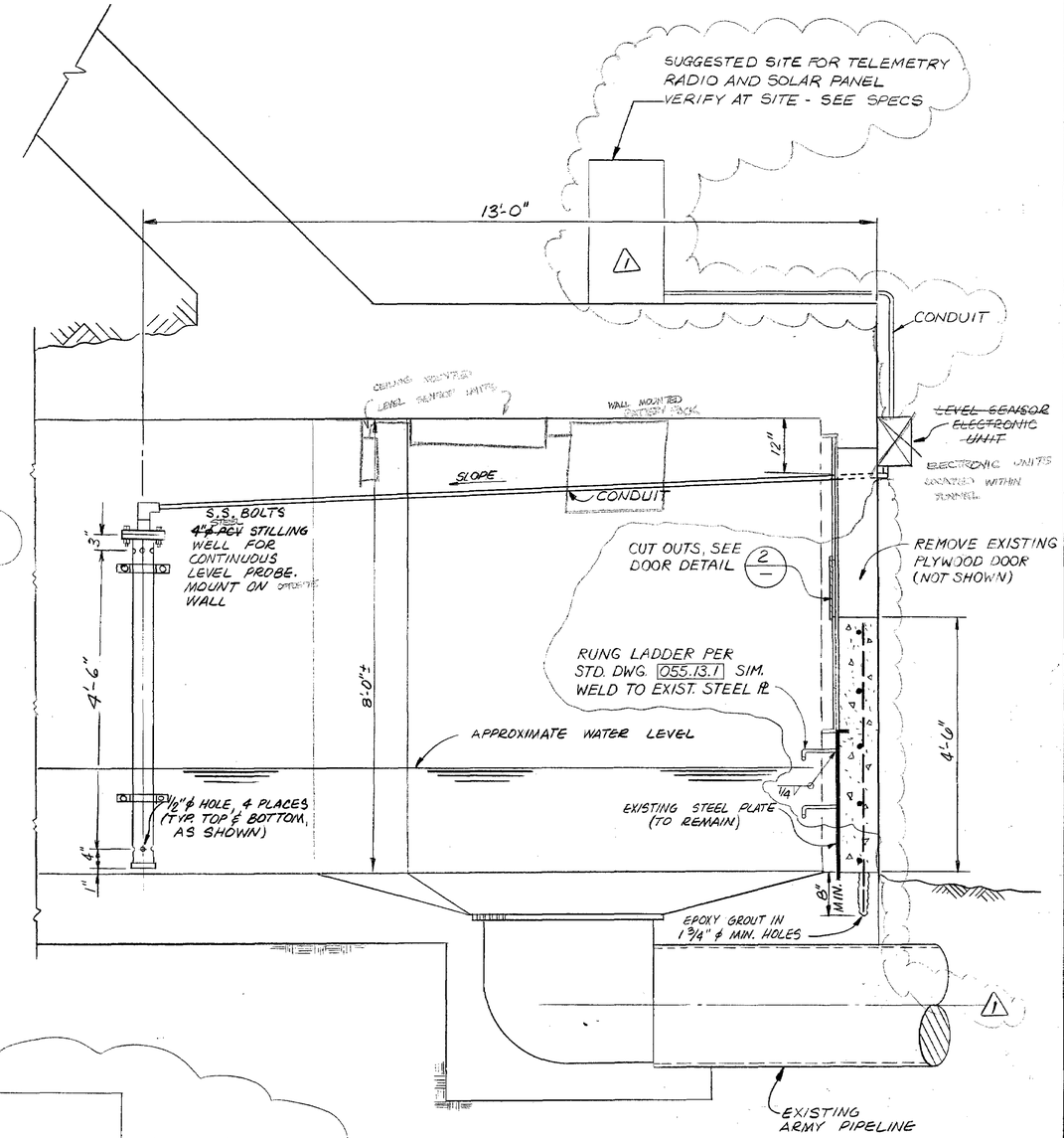

SECTION
3/4" = 1'-0"

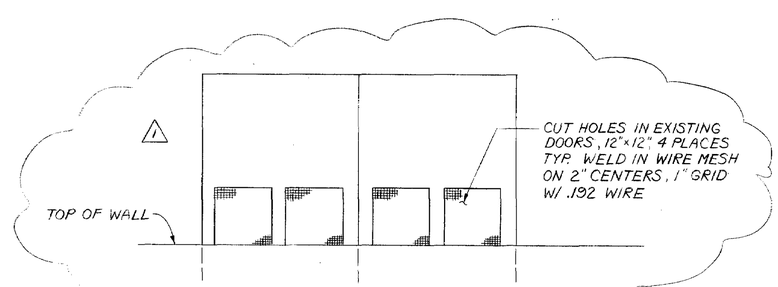

DOOR DETAIL 2
3/4" = 1'-0"

NO.	DATE	REVISIONS	BY
1	1/15/84	REVISED FOR REBID	EGR

		DATE
PROJECT NO.	3832	
DESIGNED BY	J. GRIFFITH	
DRAWN BY	D.P.	10/82
CHECKED BY	E. RAGUSE	10/82
ENGINEER	P.N. STORRS	
REGISTRATION NO.	10806	DATE 27 OCT 82

REGISTERED PROFESSIONAL ENGINEER PAUL N. STORRS No. 10806 CIVIL STATE OF CALIFORNIA

ENGINEERING-SCIENCE
DESIGN • RESEARCH • PLANNING
4611 TELLER AVE. • NEWPORT BEACH, CALIFORNIA 92660 • 714/851-9891
OFFICES IN PRINCIPAL CITIES

ES

STENNER CANYON HYDROELECTRIC PROJECT
SAN LUIS OBISPO, CALIFORNIA

HYDROELECTRIC PLANT
CUESTA TUNNEL MODIFICATIONS

SCALE: AS SHOWN
SHEET NO. M-1.3
FILE NO.

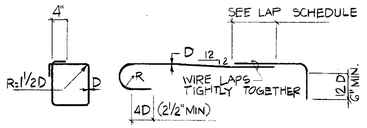

R= 3D FOR #3 BARS THRU #8 BARS
R= 4D FOR #9 BARS AND LARGER

BAR SIZE	LENGTH
#3	12"
#4	15"
#5	18"
#6	22"
#7	28"
#8	36"
#9	46"
#10	59"
#11	72"

TIE HOOK OFFSET LAP BEND

TYP. REINFORCING BAR DETAIL (1 / S-0.1)
N.T.S.

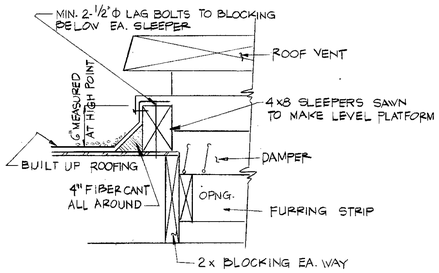

DETAIL (2 / S-0.1)
N.T.S.

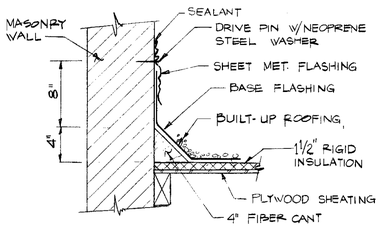

TYP. ROOF FLASHING (3 / S-0.1)
N.T.S.

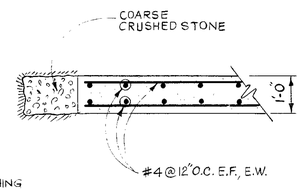

SECTION A-A
1/2" = 1'-0"

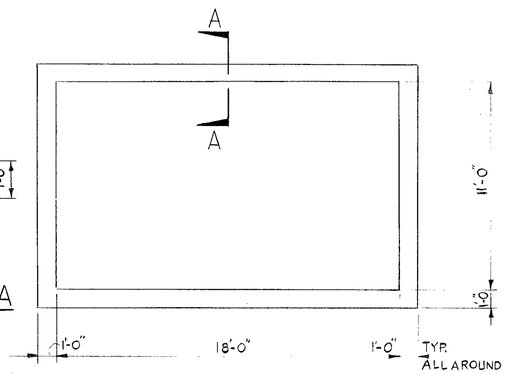

TRANSFORMER PAD (9 / S-0.1)
1/4" = 1'-0"

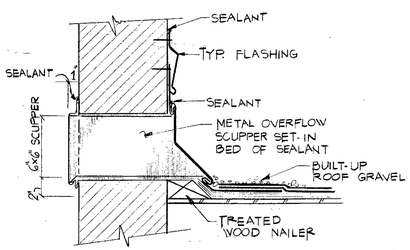

DETAIL (4 / S-0.1)
N.T.S.

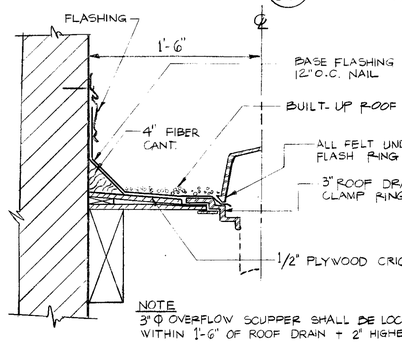

NOTE
3" Φ OVERFLOW SCUPPER SHALL BE LOCATED WITHIN 1'-6" OF ROOF DRAIN + 2" HIGHER

DETAIL (5 / S-0.1)
N.T.S.

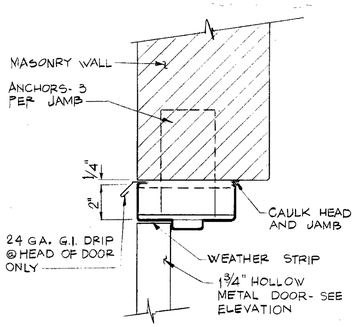

HEAD JAMB SIM (6 / S-0.1)
N.T.S.

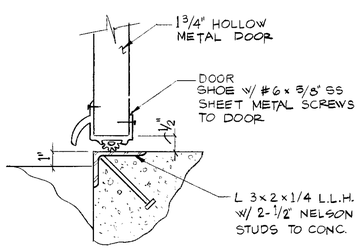

SILL (7 / S-0.1)
N.T.S.

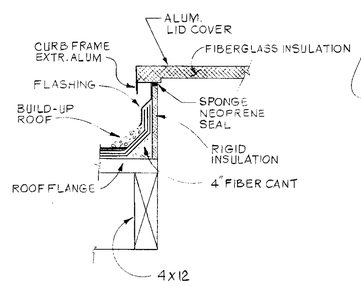

TYPICAL ROOF HATCH (8 / S-0.1)
N.T.S.

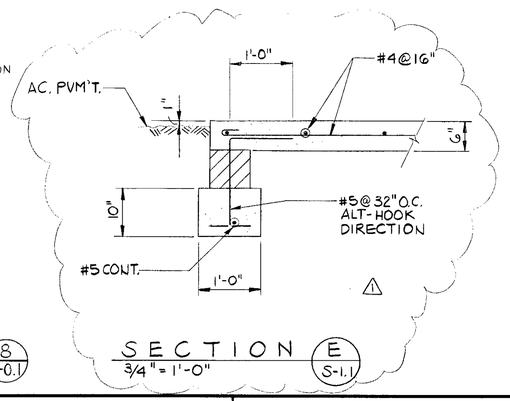

SECTION (E / S-1.1)
3/4" = 1'-0"

GENERAL NOTES

CONCRETE:

1. ALL CONCRETE SHALL BE 150 LB. PER CU. FT. DENSITY.
2. ALL CONCRETE SHALL ATTAIN THE FOLLOWING 28-DAY ULTIMATE COMPRESSIVE STRENGTHS:
   A. CLASS 1, 4000 PSI; TO BE USED EXCEPT AS NOTED.
   B. CLASS 2, 3000 PSI; TO BE USED IN STRUCTURE FOOTINGS, SLABS ON GRADE, AND OTHER STRUCTURAL CONCRETE WHICH IS NON-WATER BEARING.
   C. CLASS 3, 2000 PSI; TO BE USED FOR NON-STRUCTURAL CONCRETE SUCH AS FENCE POST FOOTINGS, CONDUIT AND PIPE ENCASEMENT, AND NON-STRUCTURAL FILLS.
3. CEMENT SHALL BE PORTLAND CEMENT, TYPE I OR II CONFORMING TO ASTM C 150. CEMENT NEED NOT BE TESTED IF MILL TEST REPORTS ARE AVAILABLE.
4. ALL FINE AND COARSE AGGREGATES SHALL BE NON-REACTIVE (SEE SPECIFICATIONS), AND SHALL CONFORM TO ASTM C-33.
5. MAXIMUM AGGREGATE SIZE SHALL BE 3/4" FOR SECTIONS 5" THICK AND THINNER, 1" FOR SECTIONS 5" TO 12" THICK, AND 1-1/2" FOR SECTIONS THICKER THAN 12".
6. ADMIXTURE MAY BE ADDED AT THE CONTRACTORS OPTION PROVIDED IT COMPLIES WITH THE SPECIFICATIONS. SUBMIT PROPOSED ADMIXTURE AND QUANTITIES TO BE USED FOR OWNERS REVIEW.
7. ALL REINFORCING STEEL, DOWELS, ANCHOR BOLTS, AND OTHER INSERTS SHALL BE SECURELY TIED IN PLACE PRIOR TO PLACING CONCRETE.
8. ALL WATER SHALL BE REMOVED FROM FOUNDATION EXCAVATIONS AND THE EXCAVATIONS SHALL BE COMPLETELY DRY BEFORE PLACING CONCRETE.
9. PROVIDE 3/4" CHAMFER ON ALL EXPOSED EDGES, UNLESS NOTED OTHERWISE.

GENERAL

1. THE CONTRACTOR AND ALL SUB-CONTRACTORS SHALL VERIFY ALL DIMENSIONS AND CONDITIONS AT THE SITE.
2. ALL DETAILS MARKED "TYPICAL" SHALL BE USED WHEREVER APPLICABLE, UNLESS OTHERWISE INDICATED ON PLANS.
3. ALL WORKMANSHIP AND MATERIALS SHALL CONFORM TO THE UNIFORM BUILDING CODE, 1979 EDITION, AS A MINIMUM REQUIREMENT.
4. THE CONTRACTOR SHALL PROVIDE SAFE AND ADEQUATE BRACES, CONNECTIONS, SHORING OR OTHER DEVICES AS REQUIRED TO SUPPORT THE COMPONENT PARTS OF THE STRUCTURE AND ADJACENT FOUNDATION MATERIAL UNTIL THE WORK IS SUFFICIENTLY COMPLETE SO THAT THE STRUCTURES ARE SELF-SUPPORTING AND CAPABLE OF SUPPORTING ADJACENT FOUNDATION MATERIAL.
5. THE CONTRACTOR SHALL VERIFY THE LOCATION AND DIMENSION OF ALL SLEEVES, PIPES, DUCTS, OPENINGS EMBEDDED OR ATTACHED ITEMS SHOWN ON THE CIVIL, ARCHITECTURAL, ELECTRICAL AND INSTRUMENTATION SHEETS.

MASONRY:

1. CONCRETE BLOCK UNITS SHALL CONFORM TO THE REQUIREMENTS FOR GRADE N, LOAD-BEARING LIGHTWEIGHT UNITS PER ASTM C-90.
2. MORTAR MIX SHALL BE ONE PART CEMENT, FROM 1/4 TO 1/2 PART LIME PUTTY OR DRY HYDRATED LIME, AND AT LEAST 2-1/4 TO NOT MORE THAN THREE TIMES THE SUM OF THE VOLUMES OF CEMENT AND LIME OF SAND.
3. GROUT MIX SHALL BE ONE PART CEMENT AND THREE PARTS SAND TO WHICH MAY BE ADDED TWO PARTS PEA GRAVEL AND SUFFICIENT WATER TO CAUSE THE GROUT TO FLOW INTO ALL JOINTS OF THE MASONRY.
4. VERTICAL REINFORCING SHALL BE HELD IN POSITION AT THE TOP AND BOTTOM AND AT INTERVALS NOT EXCEEDING 192 BAR DIAMETERS.
5. WHEN GROUTING IS STOPPED FOR MORE THAN ONE HOUR, HORIZONTAL CONSTRUCTION JOINTS SHALL BE FORMED BY STOPPING THE POUR OF GROUT 1-1/2" BELOW THE TOP OF THE UPPERMOST COURSE.
6. THE ULTIMATE COMPRESSIVE STRENGTH (f'_m) ASSUMED IN DESIGN IS 1500 PSI FOR SOLID GROUTED MASONRY AND 1350 PSI FOR PARTIALLY GROUTED MASONRY.
7. GROUT POURS FOR CONCRETE BLOCK WORK SHALL NOT EXCEED FOUR FEET IN HEIGHT.
8. ALL CELLS CONTAINING REINFORCING, BELOW GRADE, OR AS INDICATED ON THE DRAWINGS, SHALL BE SOLIDLY FILLED WITH GROUT.

LUMBER:

1. ALL FRAMING LUMBER SHALL BE #1 DOUGLAS FIR UNLESS NOTED OTHERWISE.
2. FRAMING HARDWARE HAS BEEN DESIGNATED ON THE PLANS BY "SIMPSON" CATALOGUE NUMBERS. EQUAL HARDWARE BY OTHER MANUFACTURERS WILL BE PERMITTED WITH THE OWNERS APPROVAL
3. NO STRUCTURAL MEMBER SHALL BE CUT OR NOTCHED FOR PIPE OR CONDUIT PASSAGE UNLESS SPECIFICALLY SHOWN ON THE DRAWING OR APPROVED IN THE FIELD BY THE STRUCTURAL ENGINEER.
4. HOLES FOR BOLTS SHALL BE 1/32" OVERSIZE FOR BOLTS 3/4" DIA. AND SMALLER, AND 1/16" OVERSIZE FOR BOLTS LARGER THAN 3/4" DIA.
5. ALL BOLT HEADS AND NUTS BEARING ON WOOD SHALL HAVE STEEL PLATE WASHERS.
6. UNLESS OTHERWISE INDICATED, MINIMUM NAILING SHALL BE PER TABLE 25-P OF THE UNIFORM BUILDING CODE.

REINFORCING STEEL:

1. ALL REINFORCING STEEL SHALL BE NEW BILLET STEEL DEFORMED BARS AND SHALL CONFORM TO ASTM A 615, GRADE 60 OR 40. DESIGN IS BASED ON WSD AND GRADE 40 STEEL. WELDED WIRE FABRIC SHALL CONFORM TO ASTM A 185.
2. ALL BARS SHALL BE FREE FROM BENDS, KINKS AND OTHER IRREGULARITIES (EXCEPT AS DETAILED ON THE PLANS) AND SHALL BE FREE FROM ANY MATERIAL WHICH WOULD TEND TO REDUCE THE BOND.
3. ALL REINFORCING, EXCEPT FOR SLABS ON GRADE AND FOOTINGS, SHALL BE SUPPORTED OR SPACED WITH METAL CHAIRS. ALUMINUM CHAIRS WILL NOT BE ALLOWED. REINFORCING FOR SLABS ON GRADE AND FOOTINGS SHALL BE SUPPORTED ON CONCRETE CUBES.
4. ALL SPLICES IN REINFORCEMENT SHALL BE AS DETAILED ON PLANS. ALTERNATE METHODS OF SPLICING WILL BE REVIEWED BY THE STRUCTURAL ENGINEER ON REQUEST.
5. ALL REINFORCEMENT, INCLUDING MESH, SHALL BE SECURELY TIED IN PLACE PRIOR TO PLACING CONCRETE.
6. THE MINIMUM CLEAR COVER OVER REINFORCING SHALL BE AS FOLLOWS:
   A. CONCRETE CAST AGAINST EARTH.....3"
   B. FORMED CONCRETE AGAINST EARTH OR WATER.....2"
   C. CONC. SLABS & WALLS NOT EXPOSED TO WEATHER.....3/4"
   D. OTHER FORMED CONCRETE.....1-1/2"
7. WELDING OF REINFORCEMENT SHALL BE APPROVED BY THE OWNER PRIOR TO WELDING AND SHALL BE DONE WITH LOW-HYDROGEN ELECTRODES.

NO.	DATE	REVISIONS	BY
1	1-84	GENERAL REVISIONS	SDK

PROJECT NO.	3832	DATE
DESIGNED BY	S.D.K.	
DRAWN BY	F.M.	
CHECKED BY		
ENGINEER		
REGISTRATION NO.	S-868	DATE 7-81

ROBERT WICHMAN & ASSOC. INC.
CONSULTING STRUCTURAL ENGINEERS
AN ENGINEERING-SCIENCE COMPANY

ENGINEERING-SCIENCE
DESIGN • RESEARCH • PLANNING
4611 TELLER AVE. • NEWPORT BEACH, CALIFORNIA 92660 • 714/851-9891
OFFICES IN PRINCIPAL CITIES

STENNER CANYON HYDROELECTRIC PROJECT
SAN LUIS OBISPO, CALIFORNIA

HYDROELECTRIC PLANT
GENERAL NOTES AND TYPICAL DETAILS

SCALE: AS NOTED
SHEET NO. S-0.1
FILE NO.

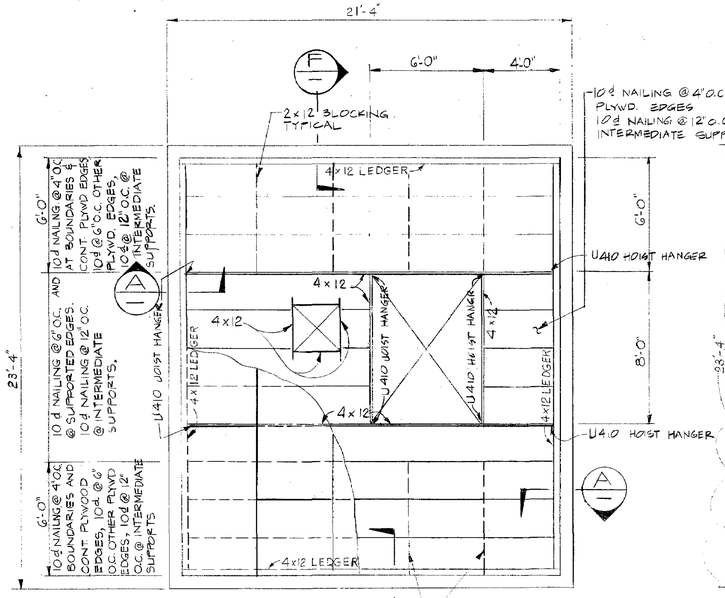

ROOF PLAN
1/4" = 1'-0"

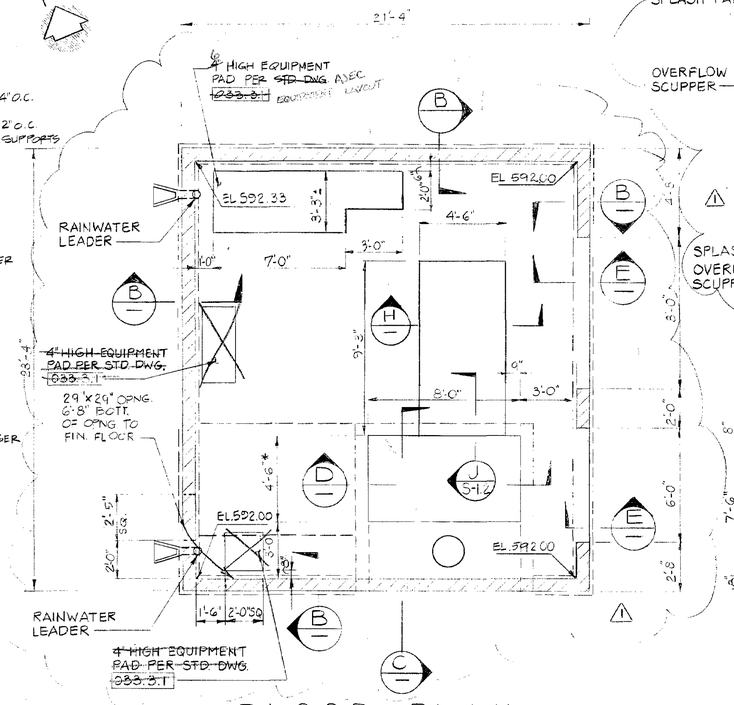

FLOOR PLAN
1/4" = 1'-0"

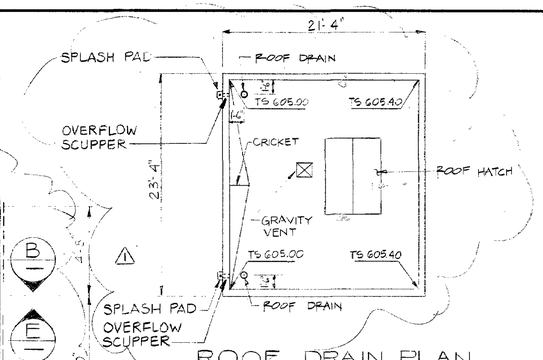

ROOF DRAIN PLAN
1/8" = 1'-0"

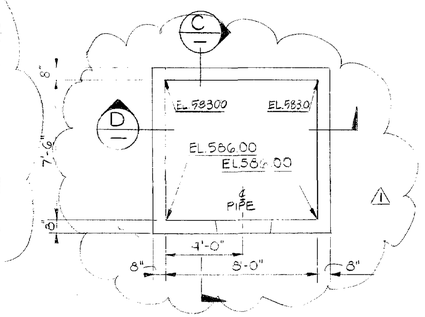

TURBINE PIT PLAN
1/4" = 1'-0"

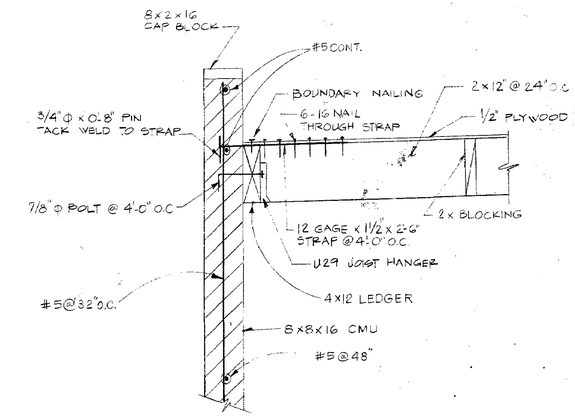

SECTION A
3/4" = 1'-0"

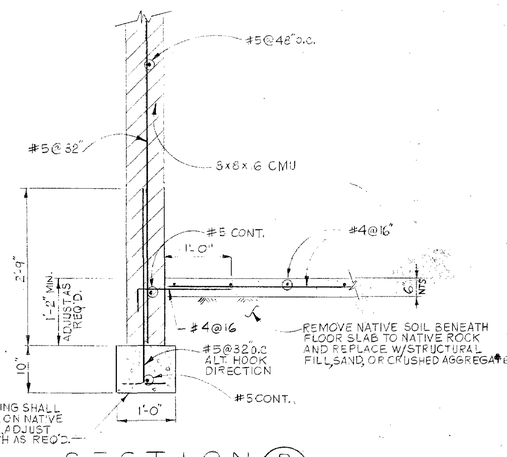

SECTION B
3/4" = 1'-0"

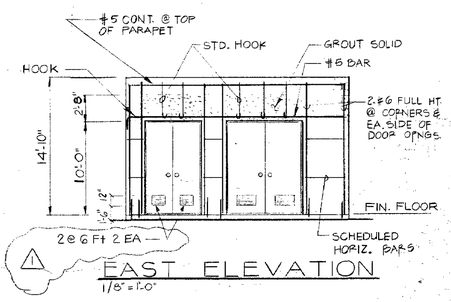

EAST ELEVATION
1/8" = 1'-0"

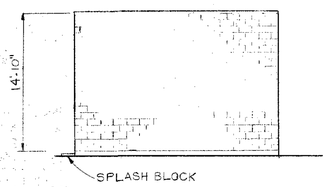

SOUTH ELEVATION
1/8" = 1'-0"

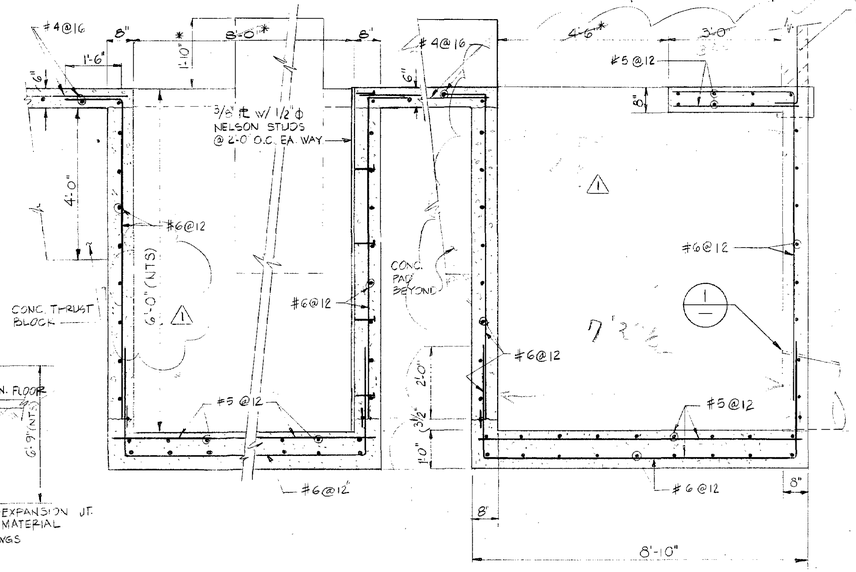

SECTION D
NTS

SECTION C
NTS

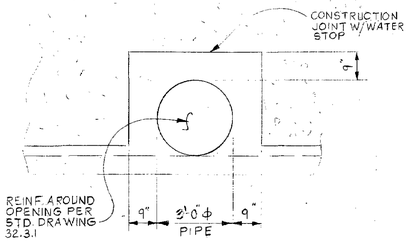

DETAIL 1
NTS

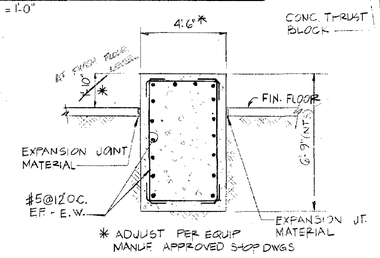

SECTION H
1/4" = 1'-0"

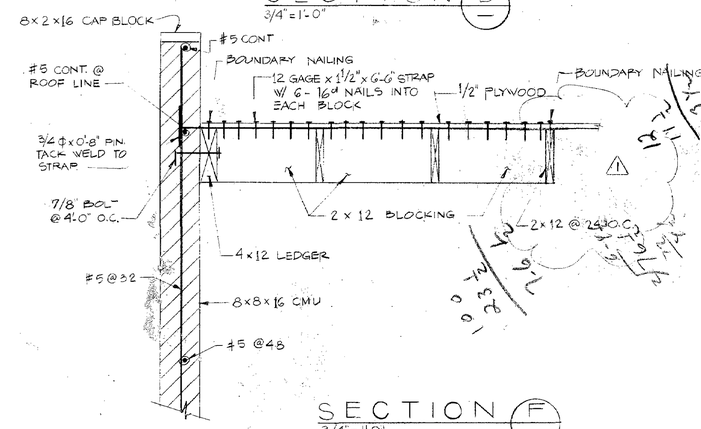

SECTION F
3/4" = 1'-0"

NO.	DATE	REVISIONS	BY
1	1-84	GENERAL REVISIONS	SDK

		DATE
PROJECT NO.	3832	
DESIGNED BY	S.D.K.	
DRAWN BY	F.M.	
CHECKED BY		
ENGINEER		
REGISTRATION NO.	S-868 DATE 7-81	

ROBERT WICHMAN & ASSOC. INC.
CONSULTING STRUCTURAL ENGINEERS
AN ENGINEERING-SCIENCE COMPANY

ENGINEERING-SCIENCE
DESIGN • RESEARCH • PLANNING
4611 TELLER AVE • NEWPORT BEACH, CALIFORNIA 92660 • 714/851-9891
OFFICES IN PRINCIPAL CITIES

ES

STENNER CANYON HYDROELECTRIC PROJECT
SAN LUIS OBISPO, CALIFORNIA

HYDROELECTRIC PLANT
HYDROELECTRIC BUILDING
PLAN AND SECTIONS

SCALE: AS NOTED
SHEET NO. S-1.1
FILE NO.

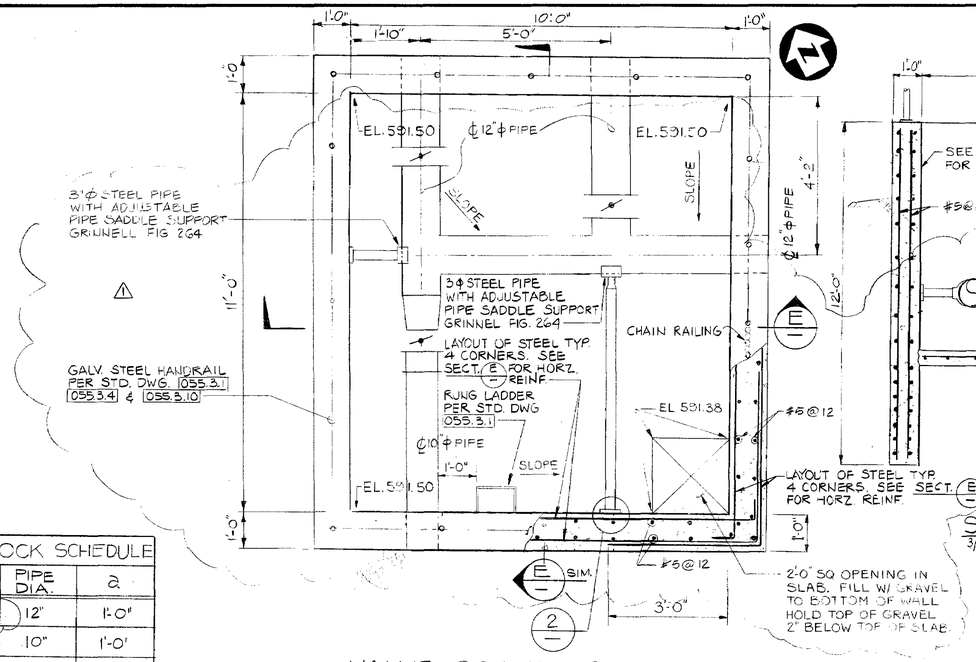

VALVE BOX No.1 PLAN

1/2" = 1'-0"

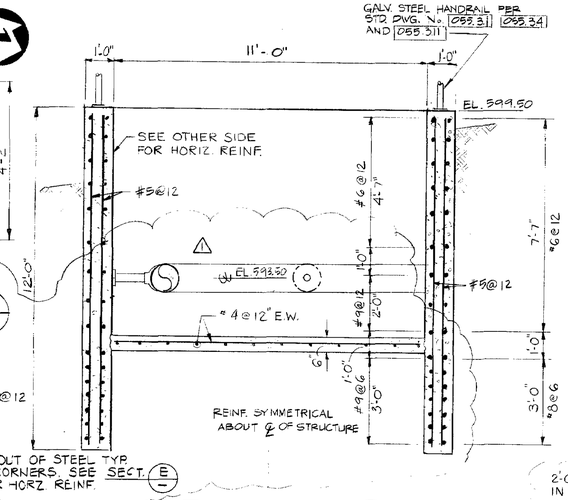

SECTION E

3/8" = 1'-0"

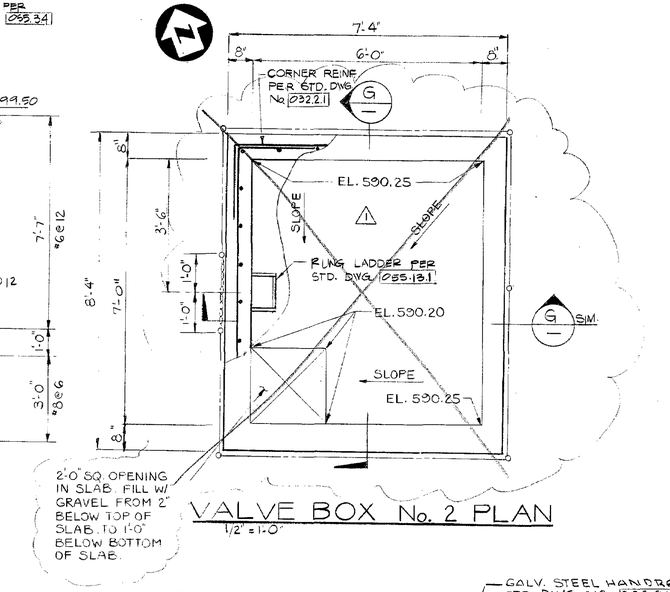

VALVE BOX No. 2 PLAN

1/2" = 1'-0"

VERTICAL THRUST BLOCK SCHEDULE					
No	h	b	L	PIPE DIA	a
1	6'-0"	3'-6"	12'-0"	12"	1'-0"
2	4'-0"	3'-0"	4'-0"	10"	1'-0"
3	3'-0"	2'-6"	2'-0"	12"	1'-0"

VERTICAL THRUST BLOCK DETAIL

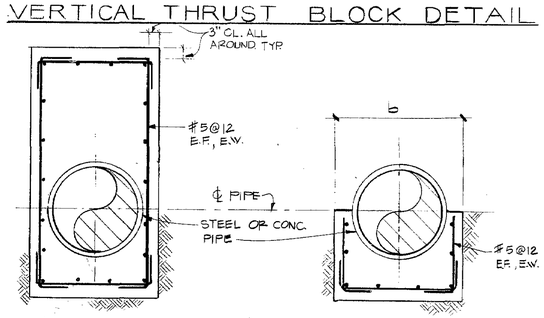

SECTION B

3/8" = 1'-0"

SECTION C

3/8" = 1'-0"

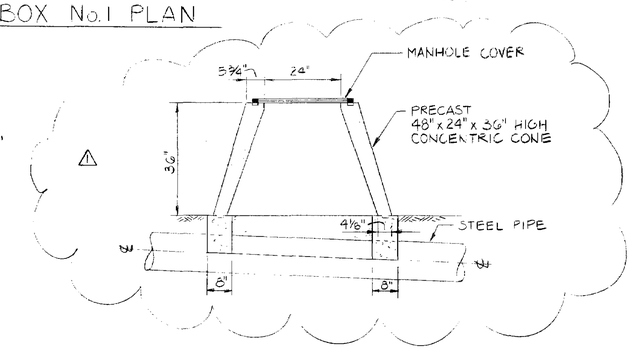

METER VAULT DETAIL F

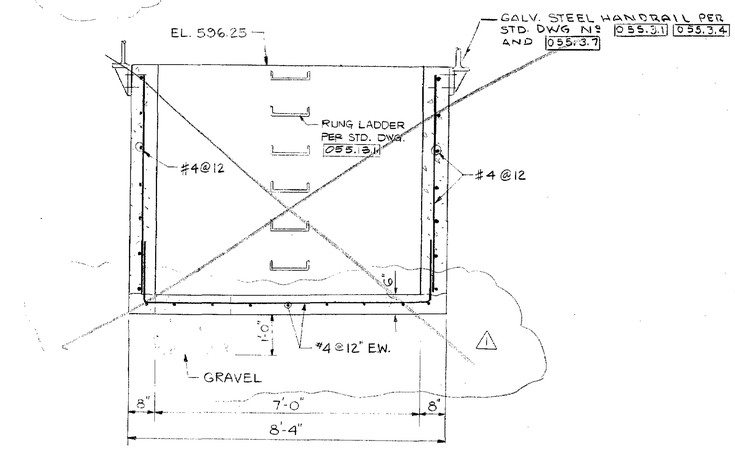

SECTION G

1/2" = 1'-0"

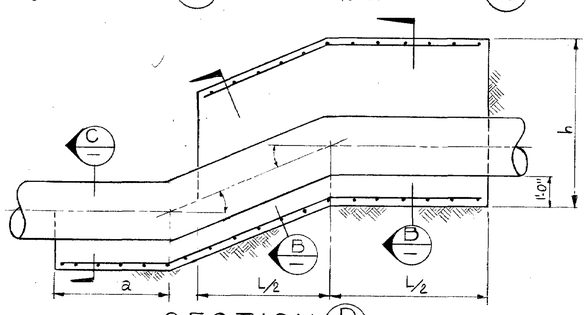

SECTION D

N.T.S.

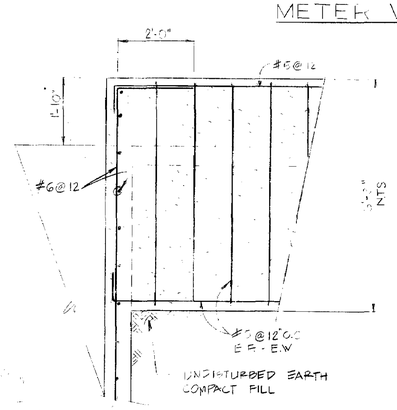

SECTION J

1/2" = 1'-0"

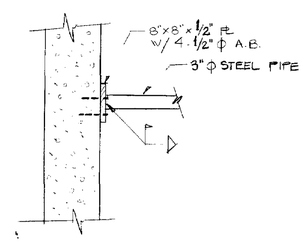

DETAIL 2

3/4" = 1'-0"

NO.	DATE	REVISIONS	BY
1	1-84	GENERAL REVISIONS	SDK

PROJECT NO. 3832		DATE	
DESIGNED BY S.K.			
DRAWN BY F.M. A.D.			
CHECKED BY			
ENGINEER			
REGISTRATION NO. S-868	DATE 7-81		

ROBERT WICHMAN & ASSOC. INC.
CONSULTING STRUCTURAL ENGINEERS
AN ENGINEERING-SCIENCE COMPANY

ENGINEERING-SCIENCE
DESIGN • RESEARCH • PLANNING
4611 TELLER AVE. • NEWPORT BEACH, CALIFORNIA 92660 • 714/851-9891
OFFICES IN PRINCIPAL CITIES

STENNER CANYON HYDROELECTRIC PROJECT

SAN LUIS OBISPO, CALIFORNIA

HYDROELECTRIC PLANT

VALVE BOX AND METER VAULT

PLANS SECTIONS AND DETAILS

SCALE AS NOTED

SHEET NO. S-1.2

FILE NO.

LIGHTING FIXTURE SCHEDULE

TYPE	DESCRIPTION	MANUFACTURER AND CATALOG NO.	ALTERNATE MANUFACTURERS		LAMPS	REMARKS
A	FLUORESCENT, INDUSTRIAL STRIP WITH SOLID REFLECTOR, 120 VOLTS	ACME 2101-4R-H	GLOBE 1241-4R	LIGHTOLIER 2001-48	ONE F40T12-CW-RS	(1)
B	INCANDESCENT, WEATHERPROOF, EXTERIOR, WITH GLOBE AND GUARD	APPLETON JBW10G	KILLARK VOBLG-100	CROUSE-HINDS VGR 116	ONE 100 WATT	WALL MOUNT
C						
D						
E						
F						

LIGHTING FIXTURE SCHEDULE NOTES:

1. STEM MOUNT THE UNIT FROM THE CEILING SUCH THAT THE BOTTOM OF THE FIXTURE IS APPROXIMATELY 9 INCHES BELOW THE UNDERSIDE OF THE CEILING JOIST.

FEEDER 3#6 — PANEL A — VOLTS 120 240 VOLTS, 1 PHASE, 3 WIRE
MAIN 50 AMP, 2 POLE BREAKER — LOCATION HYDROELECTRIC BUILDING — MTG. SURFACE — BUS. 100 AMP.

LOCATION	WATTS A	WATTS B	WATTS C	LTG	REC	MIS	CIR	BKR	BKR	CIR	MIS	REC	LTG	WATTS A	WATTS B	WATTS C	LOCATION
WEST WALL FAN	830					1	1	15	20-1	2		4		720			ALL INSIDE WALLS
		830					3	2	15	4	1				800		DEFLECTOR PRESSURE
GENERATOR CONTROL PANEL	600					1	5	20-1	2	6				800			SYSTEM
VALVE ACTUATOR		1130					7	20-1	20-1	8			9		532		CEILING & EXTERDIR LTS.
VALVE ACTUATOR	1130						9	20-1	20-1	10	1			100			FLOW METER
SPARE		–					11	20-1	20-1	12	1				1500		GENERATOR SPACE HEATERS
SPARE	–						13	20-1	20-1	14	1			200			TELEMETRY RADIO SET (1)
SPARE		–					15	20-1		16							SPACE ONLY (1)
SPACE ONLY							17			18							
SPACE ONLY							19			20							
							21			22							
							23			24							
							25			26							
							27			28							
							29			30							
							31			32							
							33			34							
							35			36							
							37			38							
							39			40							
							41			42							
SUB-TOTAL	2560	1960												1820	2832		

TOTAL = 9,172 WATTS
LCL (25% X 2732) = 683 WATTS
SPARE = 1,000 WATTS
FEEDER LOAD = 11655 WATTS = 49 AMPS AT 120/240 VOLTS, 1 PHASE

ELECTRICAL SYMBOLS

SINGLE LINE DIAGRAMS

- AMMETER
- VOLTMETER
- METER
- KILOWATT HOUR METER
- AMMETER SWITCH
- VOLTMETER SWITCH
- GROUND FAULT INTERPUPTER
- CURRENT TRANSFORMER
- POTENTIAL TRANSFORMER
- POWER TRANSFORMER
- CONTROL TRANSFORMER
- DRAW OUT TYPE EQUIPMENT
- DRAW OUT TYPE HIGH VOLTAGE MOTOR STARTER
- PLUG-IN TYPE EQUIPMENT
- CIRCUIT BREAKER, 3 POLE UNLESS OTHERWISE INDICATED
- DISCONNECT SWITCH 3 POLE UNLESS OTHERWISE INDICATED
- OIL FUSE CUTOUTS
- FUSE
- TRANSFER SWITCH, AUTOMATIC
- MAGNETIC MOTOR STARTER "1" INDICATES SIZE 1 RV INDICATFS REDUCED VOLTAGE 2S INDICATES 2 SPEED R INDICATES REVERSING
- MAGNETIC CONTACTOR
- CONTROL STATION PUSHBUTTON STATION OR SELECTOR SWITCH SEE CONTROL WIRING DIAGRAMS FOR REQUIREMENTS
- DISCONNECT SWITCH 600 VOLT 3 POLE NON-FUSED UNLESS OTHERWISE INDICATED
- MOTOR 10 HORSEPOWER
- CONDUIT NUMBER SEE CONDUIT AND WIRING SCHEDULE FOR SIZES AND QUANTITIES OF CONDUIT AND WIRES
- GROUND
- KIRK KEY INTERLOCKING OF EQUIPMENT
- EQUIPMENT FURNISHED, INSTALLED AND CONNECTED UNDER ANOTHER SECTION OF THE CONTRACT

NOT USED ON THIS PROJECT

CONTROL WIRING DIAGRAMS

NORMALLY OPEN	NORMALLY CLOSED	DEVICE
		CONTACT
		LIMIT SWITCH
		LIMIT SWITCH HELD CLOSED
		LIMIT SWITCH HELD OPEN
		PRESSURE AND VACUUM SWITCHES
		LIQUID LEVEL SWITCH
		TEMPERATURE ACTUATED SWITCH
		FLOW SWITCH (AIR WATER ETC)
		PUSH BUTTON SINGLE CIRCUIT MOMENTARY CONTACT
		PUSH BUTTON SINGLE CIRCUIT LOCK-OUT (LOCATED AT MOTOR UNLESS OTHERWISE NOTED).
		TIMED CONTACT - CONTACT ACTION RETARDED ON ENERGIZATION
		TIMED CONTACT - CONTACT ACTION RETARDED ON DE-ENERGIZATION
		PILOT LIGHT Y = YELLOW R = RED A = AMBER B = BROWN, W = WHITE G = GREEN
		STOP-START PUSHBUTTON STATION (MAINTAINED CONTACTS).
		GROUND
		HAND-OFF-AUTO SELECTOR SWITCH
		BELL
		HORN OR SIREN
		TWO POSITION SELECTOR SWITCH SEE NOTE 1
		FUSE
		RELAY
		STARTER COIL
		TIME DELAY RELAY (0-30 SECONDS UNLESS OTHERWISE NOTED).
		MOTOR STARTER OVERLOAD HEATERS
		CONTROL POWER TRANSFORMER
		MANUAL MOTOR STARTER
		ON-OFF SWITCH
		SOLENOID OPERATED CONTROL VALVE
		120 VOLT 1ø. MOTOR
		RUNNING TIME METER SEE NOTE 1.
		SPACE HEATERS (LOCATED AT MOTOR UNLESS OTHERWISE NOTED).
		TERMINALS IN CONTROL PANEL
		CONTACT OR DEVICE REMOTE FROM PANEL

NOT USED ON THIS PROJECT

PLANS

- CONDUIT RUN CONCEALED UNDER SLAB OR BELOW GRADE (CONCEALED IN SLAB WHERE SO NOTED OR WHERE ALLOWED PER SPECIFICATIONS)
- CONDUIT RUN EXPOSED UNLESS OTHERWISE NOTED.
- HASH MARKS INDICATE QUANTITY OF #12 WIRES IN CONDUIT EXCEPT NO HASH MARKS = 3/4", 2#12 UNLESS OTHERWISE NOTED
  - 3/4", 3 #12
  - 3/4", 4 #12
  - 3/4", 5 #12
  - 1", 6 #12
  - 1", 7 #12
  - 1", 8 #12
- L-1, 3 — HOMERUN TO PANEL L CIRCUITS 1 AND 3
- GROUND WIRE
- CONDUIT UP (OUT TOP OF EQUIPMENT)
- CONDUIT DOWN (OUT BOTTOM OF EQUIPMENT)
- CONDUIT STUBBED OUT AND CAPPED
- LIGHTING FIXTURE MOUNTED ON POLE OR POST OR ABOVE PLATFORM
- CEILING MOUNTED LIGHTING FIXTURE
- BRACKET MOUNTED LIGHTING FIXTURE
- FLOODLIGHT
- FLUORESCENT LIGHTING FIXTURE
- EXIT LIGHT
- RECESSED INCANDESCENT OR MERCURY VAPOR LIGHTING FIXTURE
- LIGHTING FIXTURES CONNECTED TO EMERGENCY CIRCUITS
- A 100 — LIGHTING FIXTURE TYPE A, 100 WATTS SEE LIGHTING FIXTURE SCHEDULE
- S — SINGLE POLE SINGLE THROW TOGGLE SWITCH
- S_2 — DOUBLE POLE SINGLE THROW TOGGLE SWITCH
- S_3 — THREE-WAY TOGGLE SWITCH
- S_4 — FOUR-WAY TOGGLE SWITCH
- S_R — 3 POSITION MOMENTARY CONTACT TOGGLE SWITCH
- S_M — MANUAL MOTOR STARTER

  (AT +48" OR AS NOTED)
- S_a — OUTLETS SHOWN WITH SUBSCRIPT "a" ADJACENT TO THEM SHALL BE CONTROLLED BY S_a
- DUPLEX CONVENIENCE RECEPTACLE AT +12" OR AS NOTED.
- POWER FLOOR OUTLET.
- SPECIAL PURPOSE RECEPTACLE AT +12" OR AS NOTED RATING AS INDICATED.
- WELDING OUTLET
- JUNCTION BOX, SIZE AS REQUIRED BY CODE.
- THERMOSTAT OUTLET AT +5'-9".
- CLOCK OUTLET AT +7'-6" OR AS NOTED
- TELEPHONE OUTLET AT +12" OR AS NOTED.
- TELEPHONE FLOOR OUTLET.
- HORN.
- P — CONTROL DEVICE
  - P = PRESSURE SWITCH
  - L = LIMIT SWITCH
  - F = FLOAT OR LIQUID LEVEL SWITCH
  - FL = FLOW SWITCH
  - V = CONTROL VALVE
- CONTROL STATION: PUSHBUTTON STATION OR SELECTOR SWITCH. SEE CONTROL WIRING DIAGRAMS FOR REQUIREMENTS
- MOTOR.
- GROUND WELL.
- DISCONNECT SWITCH. SEE SINGLE LINE DIAGRAM FOR SIZE
- LIGHTING PANEL, SURFACE MOUNTED
- LIGHTING PANEL, FLUSH MOUNTED
- SWITCHBOARD, DISTRIBUTION PANEL OR MOTOR CONTROL CENTER
- 12 — CONDUIT NUMBER 12 SEE CONDUIT AND WIRING SCHEDULE FOR SIZES AND QUANTITIES OF CONDUIT AND WIRES.
- +12" — INDICATES HEIGHT FROM FINISHED FLOOR OR GRADE TO CENTERLINE OF DEVICE
- (1) — INDICATES TO REFER TO NOTE (1) ON DRAWING.
- W.P. — WEATHERPROOF. PROVIDE GASKETS AS REQUIRED.
- C.O. — CONDUIT ONLY

NOT USED ON THIS PROJECT

NO.	DATE	REVISIONS	BY
1	1-84	GENERAL REVISIONS	RGC

		DATE
PROJECT NO. 3832		
DESIGNED BY	E. Bynum	7-9-81
DRAWN BY	K.K. Nishitani	7-9-81
CHECKED BY	R. [illegible]	7-9-81
ENGINEER	[illegible]	
REGISTRATION NO. C19981	DATE 7-16-81	

ENGINEERING-SCIENCE
DESIGN • RESEARCH • PLANNING
4611 TELLER AVE. • NEWPORT BEACH, CALIFORNIA 92660 • 714/851-9891
OFFICES IN PRINCIPAL CITIES

STENNER CANYON HYDROELECTRIC PROJECT
SAN LUIS OBISPO, CALIFORNIA

HYDROELECTRIC PLANT
ELECTRICAL SYMBOLS AND SCHEDULES

SCALE NONE
SHEET NO. E-0.1
FILE NO.

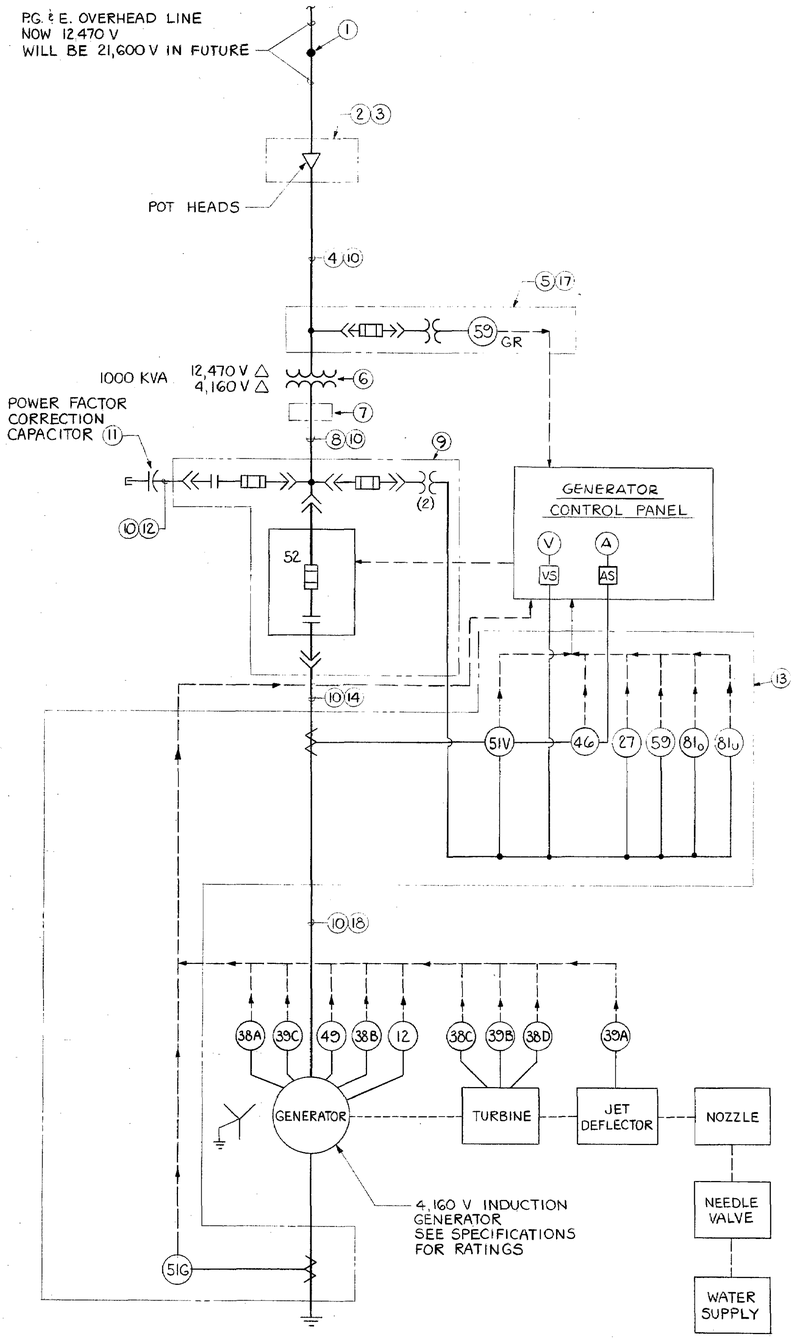

TURBINE GENERATOR SINGLE LINE DIAGRAM (15).

SEE ATTACHMENT A SHEET 1 OF 3

TERM USED IN CONTROL SPECIFICATION DESCRIPTIONS		DEVICE LEGEND (16)	
GENERATOR OVERCURRENT	ISH	51V	TIME OVERCURRENT RELAY WITH VOLTAGE CONTROL (TIME DELAY WITH VOLTAGE RESTRAINTS). G.E. 1JCV.
GENERATOR BUSS CONTACTOR	BKR	52	POWER CIRCUIT CONTACTOR
GENERATOR GROUND FAULT	GFS	51G	TIME OVERCURRENT RELAY SENSING CURRENT FLOW TO GROUND.
GENERATOR PHASE IMBALANCE	KSH	46	NEGATIVE PHASE SEQUENCE CURRENT RELAY (PHASE-BALANCE CURRENT RELAY)
GROUND FAULT DETECTION-P.G. & E. SYSTEM.		59G	OVERVOLTAGE RELAY
POWER LINE UNDERVOLTAGE	VSL	27	UNDERVOLTAGE RELAY. G.E. 1 AV
POWER LINE OVERVOLTAGE	VSH	59	OVERVOLTAGE RELAY. G.E. 1 AV
HIGH BEARING TEMP. RELAY-GENERATOR	THB2	38A	BEARING OVERTEMPERATURE SENSOR
		38B	BEARING OVERTEMPERATURE SENSOR
HIGH BEARING TEMP. RELAY-TURBINE	THB1	38C	BEARING OVERTEMPERATURE SENSOR
		38D	BEARING OVERTEMPERATURE SENSOR
DEFLECTED POSITION SWITCH	JSD	39A	JET DEFLECTOR MONITOR
HIGH VIBRATION RELAY-TURBINE	VHR1	39B	TURBINE VIBRATION SENSOR
HIGH VIBRATION RELAY-GENERATOR	VHR2	39C	GENERATOR VIBRATION SENSOR
OVER-SPEED RELAY	SHR	12	OVER-SPEED DEVICE
HIGH WINDING TEMP. RELAY	THW	49	GENERATOR WINDING THERMAL RELAY
		A	AMMETER
		V	VOLTMETER
OVERFREQUENCY	FSH	81o	OVERFREQUENCY RELAY. G.E. 1 JF
UNDERFREQUENCY	FSL	81u	OVERFREQUENCY RELAY. G.E. 1 JF

NOTES:

1. SEE SITE PLAN NOTE 1.
2. METERING POLE PER SITE PLAN NOTE 2.
3. SEE SITE PLAN NOTE 3.
4. CONDUCTORS & RACEWAY PER SITE PLAN NOTE 5.
5. HIGH VOLTAGE CONTROL CUBICLE PER SITE PLAN NOTE 8.
6. TRANSFORMER OF SITE PLAN NOTE 9.
7. J-BOX OF SITE PLAN NOTE 11.
8. CONDUCTORS & RACEWAY OF SITE PLAN NOTE 12.
9. MEDIUM VOLTAGE CONTROLLER PER BUILDING POWER PLAN NOTE 2.
10. PROVIDE PREFORMED STRESS CONE AT EACH END OF EACH HIGH VOLTAGE CABLE EXCEPT WHERE POT HEAD IS INSTALLED.
11. POWER FACTOR CORRECTION CAPACITORS PER BUILDING POWER PLAN NOTE 3.
12. CONDUCTORS & RACEWAY OF BUILDING POWER PLAN NOTE 11.
13. METERING CUBICLE PER BUILDING POWER PLAN NOTE 4.
14. CONDUCTORS & RACEWAY OF BUILDING POWER PLAN NOTE 12.
15. THE DETAILED WIRING DIAGRAM OF THE CONTROLS AND INSTRUMENTS ARE PART OF THE TURBINE-GENERATOR SYSTEM. THE DEVICES ARE REPRESENTED SYMBOLICALLY ON THIS DIAGRAM AND THEIR FUNCTION IS DESCRIBED ON THIS SHEET AND ALSO IN THE SPECIFICATIONS.

    THE CONTRACTOR SHALL DESIGN THE DETAILED WIRING DIAGRAM AND SCHEMATIC DIAGRAM OF ALL OF THE REQUIRED CONTROLS AND INSTRUMENTATION. SUBMIT THIS DESIGN FOR APPROVAL BEFORE PROCUREMENT OF COMPONENTS. CO-ORDINATE THE ABOVE DESIGN ITEMS SUCH AS THE TURBINE, THE GENERATOR, AND GENERATOR CONTROL PANEL.
16. ALL RELAYS SHALL BE UTILITY GRADE AND ALL RELAYS SHALL BE APPROVED BY P.G. & E.
17. EQUIPMENT AND INSTALLATION SHALL COMPLY TO P.G. & E. REQUIREMENTS. SEE P.G. & E. GROUND FAULT SENSING SCHEME-ATTACHMENT A SHEET 1 IN THE SPECIFICATIONS.
18. CONDUCTORS AND RACEWAY PER BUILDING POWER PLAN NOTE 13.

FUNCTION CHART OF OPERATING CHARACTERISTICS

ASSOCIATED SYSTEM COMPONENT OR COMPONENTS.	EVENT OR SITUATION / RESULTANT ACTION	NO ACTION	POWER CIRCUIT CONDUCTORS ARE OPENED BY CIRCUIT BREAKER (CONTACTOR)	INDICATOR LIGHT WITH LATCH-IN CIRCUIT GOES ON TO REPORT THE FAILURE CAUSE.	JET DEFLECTOR SHALL DEFLECT WATER JET.			
51V	TOO MUCH CURRENT FLOWING IN OUTPUT CONDUCTORS FOR A SHORT TIME WITH CIRCUIT VOLTAGE MAINTAINED.	●						
51V	TOO MUCH CURRENT FLOWING IN OUTPUT CONDUCTORS FOR A LONGER TIME WITH CIRCUIT VOLTAGE REDUCED.		●	●	●			
51G	TOO MUCH CURRENT FLOWING FROM GENERATOR TO GROUND (GROUND FAULT PROTECTION).		●	●	●			
46	UNBALANCED PHASE CURRENTS CAUSING ROTOR OVERHEATING.		●	●	●			
59G	P G & E SYSTEM VOLTAGE FALLS BELOW A GIVEN VALUE.		●	●	●			
27	P G & E VOLTAGE FALLS BELOW A GIVEN PRESET VALUE.		●	●	●			
59	P G & E VOLTAGE RISES ABOVE A GIVEN PRESET VALUE.		●	●	●			
38A, 38B	GENERATOR BEARINGS GET TOO HOT.		●	●	●			
38C, 38D	TURBINE BEARINGS GET TOO HOT.		●	●	●			
39A	JET DEFLECTOR DEFLECTS WATER JET.		●					
39C	GENERATOR VIBRATES TOO MUCH.		●	●	●			
39B	TURBINE VIBRATES TOO MUCH.		●	●	●			
12	GENERATOR ROTATES TOO FAST.		●	●	●			
49	GENERATOR WINDINGS TOO HOT.		●	●	●			
81o	FREQUENCY ABOVE 62 HZ FOR 1 SECOND.		●	●	●			
81u	FREQUENCY BELOW 58 HZ FOR 1 SECOND.		●	●	●			

NO.	DATE	REVISIONS	BY
1	1-84	GENERAL REVISIONS	RGC

		DATE
PROJECT NO. 3832		
DESIGNED BY D. Bryner		7-9-81
DRAWN BY K.K. Nebicka		7-9-81
CHECKED BY R Chapman		7-9-81
ENGINEER		
REGISTRATION NO. C 19981	DATE 7-16-81	

ENGINEERING-SCIENCE
DESIGN • RESEARCH • PLANNING
4611 TELLER AVE. • NEWPORT BEACH, CALIFORNIA 92660 • 714/851-9897
OFFICES IN PRINCIPAL CITIES

STENNER CANYON HYDROELECTRIC PROJECT

SAN LUIS OBISPO, CALIFORNIA

HYDROELECTRIC PLANT

SINGLE LINE DIAGRAM

SCALE NONE

SHEET NO. E-0.2

FILE NO.

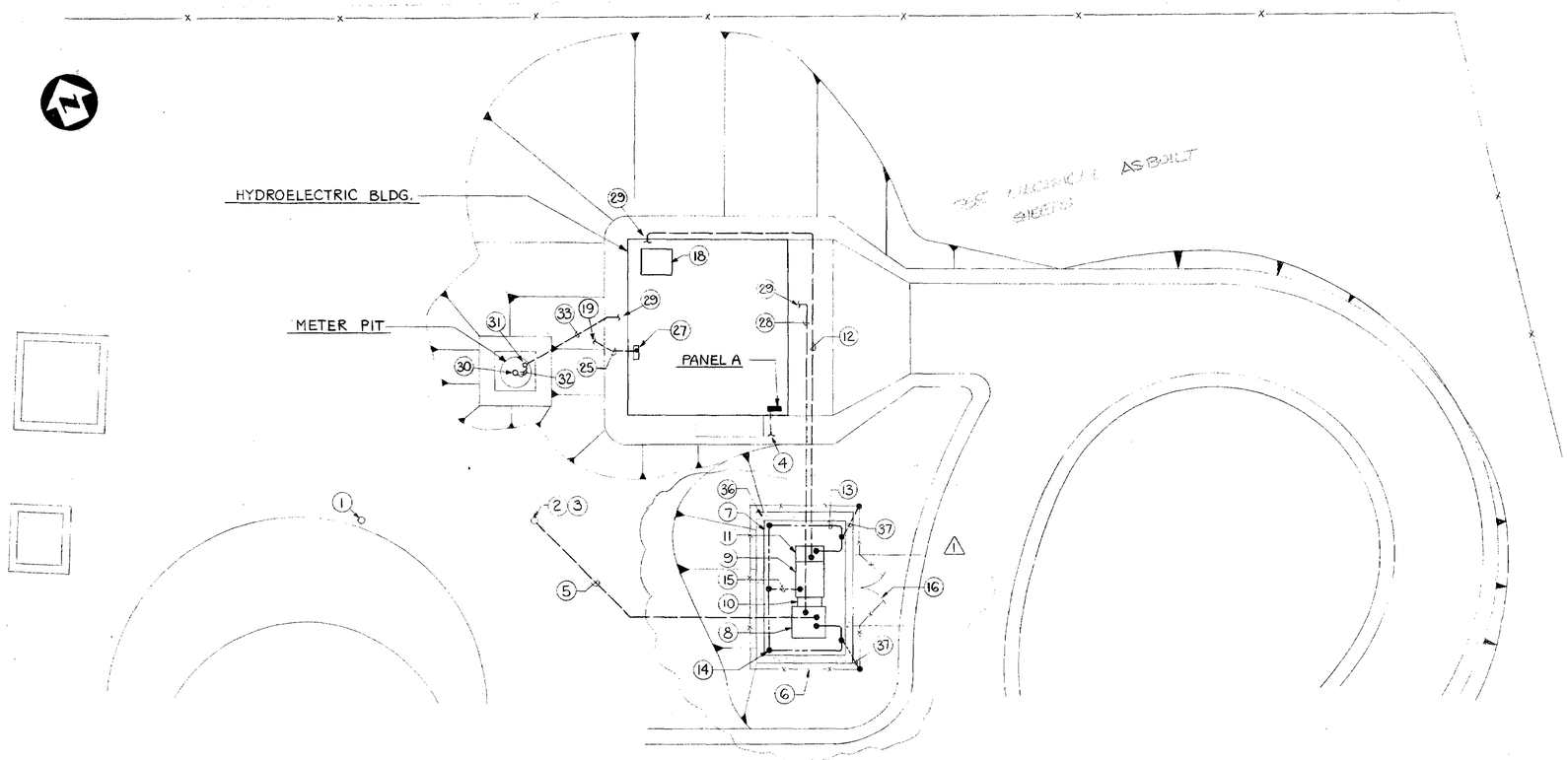

ELECTRICAL SITE PLAN (17)

1" = 10'

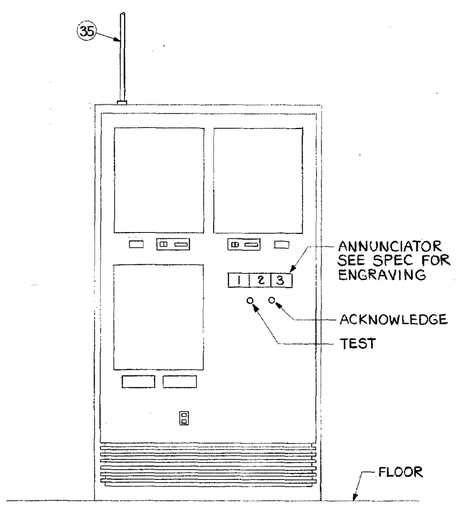

MODIFICATIONS TO PANEL AT WATER TREATMENT PLANT (34)

N.T.S.

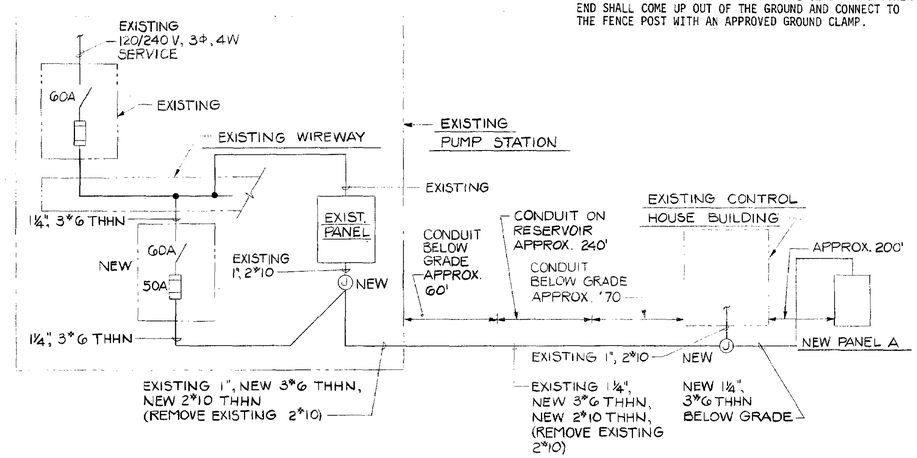

120/240 VOLT SINGLE LINE DIAGRAM (20)

36. 1' WIDE X 1' DEEP TRENCH FILLED WITH COARSE CRUSHED STONE.

37. #4/0 BARE STRANDED COPPER GROUND CONDUCTOR CONCEALED IN SLAB OR BELOW GRADE. ONE END SHALL BE CONNECTED TO THE GROUND CONDUCTOR OF NOTE 13 WITH AN EXOTHERMIC WELD CONNECTION WITHIN THE CONCRETE SLAB. THE OTHER END SHALL COME UP OUT OF THE GROUND AND CONNECT TO THE FENCE POST WITH AN APPROVED GROUND CLAMP.

NOTES:

1. NEW P.G. & E. POLE WITH DISCONNECT SWITCHES. CONTRACTOR SHALL COORDINATE THE REMOVAL OF THE EXISTING UTILITY POLE BY P.G. & E.

2. METERING POLE. PROVIDE POLE, EQUIPMENT ON POLE, AND GROUNDING PER P.G. & E. DRAWING 058779-P SHEETS 1, 2, AND 4. FURNISH AND INSTALL ALL ITEMS SHOWN ON SHEET 2 AS "MATERIAL TO BE FURNISHED BY CUSTOMER". PROVIDE 12 KV SERVICE RISER, POT HEAD SUPPORTS AND POT HEADS AS INDICATED ON SHEET 4. VERIFY LOCATION WITH P.G. & E. REFERENCED P.G. & E. DRAWINGS ARE INCLUDED IN THE SPECIFICATIONS, FOLLOWING SECTION 01015.

3. COORDINATE INSTALLATION OF EQUIPMENT WHICH IS TO BE FURNISHED AND INSTALLED ON THE METERING POLE BY P.G.& E.

4. 1 1/4", 3#6 THHN TO J-BOX AT EXISTING CONTROL HOUSE BUILDING. SEE 120/240 VOLT SINGLE LINE DIAGRAM ON THIS SHEET.

5. 4" SCHEDULE 80 PVC CONDUIT WITH THREE #1 SIZE 25 KV CABLES.

6. 21' X 14' CHAIN LINK FENCED ENCLOSURE MADE OF 6' HIGH FENCE WITH A 10' WIDE GATE MADE OF TWO 5' SWINGING LEAVES.

7. 18' X 11' CONCRETE PAD.

8. NEMA 3R HIGH VOLTAGE CONTROL AND CONDUCTOR CONNECTION CUBICLE; APPROXIMATE SIZE 52" WIDE X 52" DEEP X 133" HIGH. THE VOLTAGE RATING OF ALL HIGH VOLTAGE COMPONENTS SHALL BE 25,000 VOLTS.

9. PAD MOUNT OIL FILLED TRANSFORMER WITH VOLTAGE RATINGS AS SPECIFIED ON SINGLE LINE DIAGRAM AND IN THE SPECIFICATIONS.

10. TRANSITION THROAT BETWEEN TRANSFORMER AND METERING CUBICLE.

11. AIR FILLED JUNCTION BOX ATTACHED TO TRANSFORMER.

12. 4" SCHEDULE 80 PVC CONDUIT WITH THREE #2/0 SIZE 5 KV CABLES AND ONE #2 BARE STRANDED COPPER GROUND CONDUCTOR.

13. APPROXIMATELY 60' OF BARE STRANDED #4/0 COPPER CONDUCTOR LOCATED WITHIN THE CONCRETE OF THE CONCRETE PAD OF NOTE 7 POSITIONED APPROX. 4" FROM PAD PERIMETER, APPROXIMATELY 2" ABOVE THE BOTTOM OF THE CONCRETE. THIS CONDUCTOR SHALL BE A GROUNDING ELECTRODE PER N.E.C. ART. 250-81.C. ONE END OF THIS CONDUCTOR SHALL BE LOCATED WITHIN THE HIGH VOLTAGE CONTROL CUBICLE WITH 5 FEET OF SLACK FOR CONNECTION. THE OTHER END OF THIS CONDUCTOR SHALL BE WITHIN THE AIR FILLED JUNCTION BOX OF NOTE 11 WITH 5' OF SLACK FOR CONNECTION. CONNECT EACH END OF THE CONDUCTOR TO THE METAL OF THE ENCLOSURES.

14. 1" DIA. X 20' COPPER CLAD STEEL GROUND ROD CONNECTED TO THE CONDUCTOR OF NOTE 13 BY EXOTHERMIC WELD. THE TOP OF THIS GROUND ROD SHALL BE BELOW THE SURFACE OF THE CONCRETE PAD.

15. #4/0 BARE STRANDED COPPER CONDUCTOR BURIED WITHIN THE CONCRETE PAD. ONE END SHALL BE CONNECTED TO THE CONDUCTOR OF NOTE 13 WITH AN EXOTHERMIC WELD AND THE OTHER END SHALL STICK UP OUT OF THE CONCRETE NEAR THE LOCATION OF THE TRANSFORMER GROUND PAD AND SHALL BE CONNECTED TO THAT GROUND PAD.

16. PROVIDE GATE LATCHING AND LOCKING ARRANGEMENT SUCH THAT TWO PADLOCKS CAN BE INSTALLED SUCH THAT UNLOCKING EITHER PADLOCK WILL ALLOW THE GATE TO BE OPENED.

17. SEE 120/240 VOLT SINGLE LINE DIAGRAM ON THIS SHEET FOR REQUIRED CIRCUITING BETWEEN PANEL A AND FUSED DISCONNECT SWITCH IN EXISTING PUMP STATION.

18. MEDIUM VOLTAGE CONTROLLER CUBICLE.

19. TO EXISTING TELEPHONE COMPANY POLE APPROXIMATELY 75 FEET NORTHWEST OF BUILDING. VERIFY LOCATION AT JOB SITE WITH TELEPHONE COMPANY. STUB CONDUIT UP POLE 1'-0" ABOVE GRADE PER TELEPHONE COMPANY REQUIREMENTS.

20. VERIFY DISTANCES BETWEEN EXISTING STRUCTURES, LOCATION OF EXISTING CONDUITS, LOCATION OF EXISTING EQUIPMENT AND DEVICES AT THE JOB SITE.

21.

22.

23.

24.

25. 3" SCHEDULE 40 PVC EMPTY CONDUIT WITH A PULL WIRE PER TELEPHONE COMPANY REQUIREMENTS.

26.

27. TELEPHONE TERMINAL CABINET.

28. CONDUITS AND CONDUCTORS PER BUILDING PLAN NOTE 30.

29. SEE BUILDING POWER PLAN FOR CONTINUATION.

30. FLOW METER PROBE ASSEMBLY.

31. FLOW METER EQUIPMENT ENCLOSURE.

32. 3/4" LIQUID-TIGHT FLEXIBLE CONDUIT. INSTALL CONDUCTORS WITHIN THE CONDUIT THAT ARE REQUIRED BY THE FLOW METER SUPPLIER.

33. HOMERUN TO PANEL A CIRCUIT 10 AND INSTRUMENTATION CONDUIT OF BUILDING POWER PLAN NOTE 39.

34. VERIFY THE TRUE LOCATION OF THIS PANEL AT THE EXISTING OPERATING WATER TREATMENT PLANT.

35. 3/4" EMT FROM THIS INSTRUMENTATION PANEL TO THE EXISTING TELEPHONE TERMINAL BOX OR TELEPHONE BACKBOARD. VERIFY THE ACTUAL LOCATION OF THE TELEPHONE TERMINAL BOX OR BACKBOARD. RUN THE EMT OVERHEAD SUSPENDED FROM THE CEILING UNLESS OTHERWISE INSTRUCTED BY OWNER. ALLOW FOR THE PROVISION AND INSTALLATION OF 100 FEET OF EMT IN YOUR BID. THIS RACEWAY SHALL CONTAIN THE TELEPHONE CONDUCTORS (TO BE INSTALLED BY THE TELEPHONE COMPANY) WHICH WILL CARRY THE TELEMETRY SIGNALS FROM THE NEW GENERATOR CONTROL PANEL TO THE EXISTING INSTRUMENTATION PANEL. SEE SPEC. SECTION 17010.

NO.	DATE	REVISIONS	BY
1	1-84	GENERAL REVISIONS	RGC

PROJECT NO. 3832		DATE
DESIGNED BY G. Bryner		7-9-81
DRAWN BY K.K. Nishiko		7-9-81
CHECKED BY R. Chapman		7-9-81
ENGINEER		
REGISTRATION NO. C 19981	DATE 7-16-81	

ENGINEERING-SCIENCE
DESIGN • RESEARCH • PLANNING
4611 TELLER AVE. • NEWPORT BEACH, CALIFORNIA 92660 • 714/851-9891
OFFICES IN PRINCIPAL CITIES

STENNER CANYON HYDROELECTRIC PROJECT

SAN LUIS OBISPO, CALIFORNIA

HYDROELECTRIC PLANT

ELECTRICAL SITE PLAN AND DETAILS

SCALE: AS NOTED

SHEET NO. E-0.3

FILE NO.

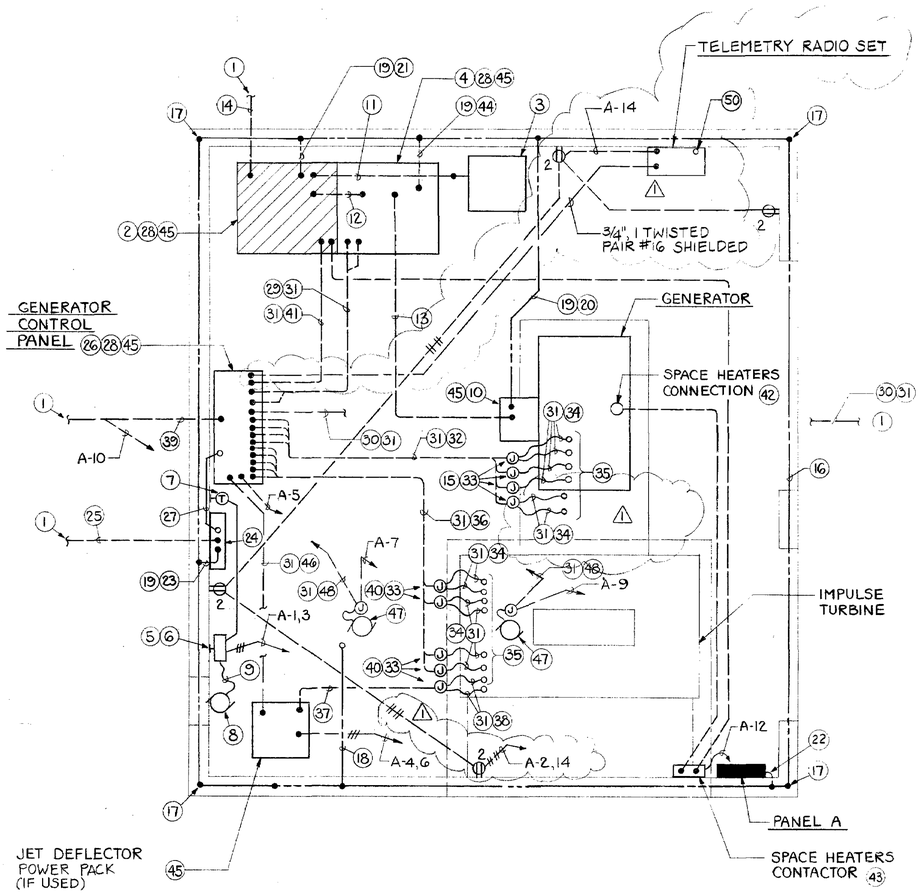

SEE ELECTRICAL AS-BUILT SHEETS

40. THE J-BOX SHALL BE SUPPORTED +9" ABOVE THE FLOOR BY BOTH THE CONDUIT COMING UP OUT OF THE FLOOR WHICH SHALL CONTAIN THE WIRING AND ONE EMPTY CONDUIT STUB WHICH SHALL GO DOWN FROM THE J-BOX AND END 6" BELOW THE FLOOR. THE EMPTY CONDUIT STUB SHALL BE THE SAME SIZE AS THE WIRING CONDUIT.

41. 2" CONDUIT.

△ 42. REFER TO SECTION 16201 OF SPEC. NO. 2

43. 20 AMP-1 POLE RATED CONTACTOR IN NEMA 1 ENCLOSURE WITH 120 VOLT OPERATING COIL. MOUNT ENCLOSURE ON WALL AT +60".

44. THE OTHER END SHALL COME UP OUT OF THE CONCRETE WITHIN THE METERING CUBICLE. LEAVE 4 FEET OF SLACK CONDUCTOR AND CONNECT TO THE CUBICLE GROUND BUS.

45. LOCATE THE CONDUIT STUB UPS ACCORDING TO THE APPROVED EQUIPMENT SHOP DRAWINGS AND NOT ACCORDING TO THIS DRAWING.

46. 1" CONDUIT TO CONTAIN CONTROL WIRING BETWEEN THE GENERATOR CONTROL PANEL AND THE JET DEFLECTOR CONTROL SYSTEM.

47. ELECTRIC NEEDLE VALVE ACTUATOR.

48. 1" CONDUIT TO GENERATOR CONTROL PANEL TO CONTAIN CONTROL WIRING BETWEEN THE CONTROL PANEL AND THE NEEDLE VALVE ACTUATOR.

△ 49.

△ 50. 1" CONDUIT ONLY TO ANTENNA. VERIFY REQUIREMENTS WITH TELEMETRY RADIO SET SUPPLIER.

17. 1" DIAMETER X 20' COPPER CLAD STEEL GROUND ROD CONNECTED TO THE CONDUCTOR OF NOTE 16 BY AN EXOTHERMIC WELD CONNECTION. THE TOP OF THE GROUND ROD SHALL BE BELOW THE ELEVATION OF THE BUILDING FLOOR AND WHOLLY WITHIN THE CONCRETE FOUNDATION.

18. #4/0 BARE STRANDED COPPER GROUND CONDUCTOR BURIED WITHIN OR BENEATH THE FLOOR SLAB. ONE END SHALL COME UP OUT OF THE FLOOR APPROXIMATELY 6" AND CONNECT TO STEEL INLET WATER PIPE USING AN APPROVED PIPE GROUND CLAMP. THE OTHER END SHALL BE CONNECTED TO THE GROUND CONDUCTOR OF NOTE 16 WITH AN EXOTHERMIC WELD CONNECTION WITHIN THE CONCRETE FOUNDATION.

19. #4/0 BARE STRANDED COPPER GROUND CONDUCTOR BURIED WITHIN OR BENEATH THE FLOOR SLAB. ONE END SHALL BE CONNECTED TO THE GROUND CONDUCTOR OF NOTE 16 WITH AN EXOTHERMIC WELD CONNECTION WITHIN THE CONCRETE FOUNDATION.

20. THE OTHER END SHALL COME UP OUT OF THE CONCRETE AND BE CONNECTED TO THE METAL GENERATOR TERMINAL BOX.

21. THE OTHER END SHALL COME UP OUT OF THE CONCRETE WITHIN THE CONTROLLER CABINET OF NOTE 2. LEAVE 4' OF SLACK CONDUCTOR AND CONNECT TO EQUIPMENT GROUND TERMINAL.

22. #6 BARE STRANDED COPPER GROUND CONDUCTOR BURIED WITHIN OR BENEATH THE FLOOR SLAB. ONE END SHALL BE CONNECTED TO THE GROUND CONDUCTOR OF NOTE 16 WITH AN EXOTHERMIC WELD CONNECTION WITHIN THE CONCRETE FOUNDATION. THE OTHER END SHALL COME UP OUT OF THE CONCRETE, AND BE CONNECTED TO THE PANEL.

23. THE OTHER END SHALL COME UP OUT OF THE CONCRETE FLOOR, SHALL BE SURFACE MOUNTED ON THE WALL BENEATH THE TELEPHONE CABINET, AND SHALL END WITHIN THE TELEPHONE CABINET. LEAVE 2' OF SLACK CONDUCTOR.

24. TELEPHONE TERMINAL CABINET, 24" WIDE X 36" HIGH X 6" DEEP WITH HINGED COVER AND PLYWOOD BACKBOARD.

25. TELEPHONE CONDUIT PER SITE PLAN NOTE 25.

26. VERIFY THE ACTUAL SIZE OF THIS GENERATOR CONTROL PANEL.

27. 1" C.O. BETWEEN GENERATOR CONTROL PANEL AND TELEPHONE CABINET TO CONTAIN THE TELEMETRY CONDUCTORS BY THE TELEPHONE COMPANY.

△ 28. OBTAIN THE ACTUAL WIRING DIAGRAM OF THE GENERATOR CONTROL PANEL AND REFER TO THE SPECIFICATIONS, AND TO THE ELECTRICAL SINGLE LINE DIAGRAM AND FUNCTION CHART IN ORDER TO ESTABLISH THE ACTUAL WIRING REQUIREMENTS FOR THE FUNCTIONAL OPERATING DEVICES ASSOCIATED WITH GENERATOR CONTROL AND THE ASSOCIATED DEVICES.

29. TWO 2" CONDUITS TO CONTAIN WIRING BETWEEN THE GENERATOR CONTROL PANEL AND THE METERING CUBICLE OF NOTE 4.

30. TWO 2" SCHEDULE 80 PVC CONDUITS (1 SPARE) TO CONTAIN CONTROL WIRING BETWEEN THE GENERATOR CONTROL PANEL AND THE HIGH VOLTAGE CONTROL CUBICLE ON THE TRANSFORMER PAD. THE MINIMUM SIZE OF CONDUCTORS SHALL BE #12 AWG.

31. DETERMINE THE CONTROL WIRING THAT WILL BE REQUIRED IN THIS RACEWAY FROM THE APPROVED SHOP DRAWINGS AND WIRING DIAGRAMS FOR THE GENERATOR, TURBINE, GENERATOR CONTROL PANEL, DEFLECTOR SYSTEM, MEDIUM VOLTAGE CONTROLLER, 5 KV METERING CUBICLE, AND POWER FACTOR CORRECTION CAPACITOR, AND HIGH VOLTAGE CONTROL CUBICLE.

32. FOUR 1" CONDUITS TO CONTAIN CONTROL WIRING BETWEEN THE GENERATOR AND THE GENERATOR CONTROL PANEL.

33. 2 GANG DEEP CAST METAL J-BOX WITH SCREWCOVER.

34. 1/2" LIQUID-TIGHT FLEXIBLE CONDUIT WITH ONE #12 TW GROUND CONDUCTOR AND CONTROL CONDUCTORS AS REQUIRED. VERIFY FROM THE APPROVED SHOP DRAWINGS THE ACTUAL DEVICE TO WHICH THIS CONDUIT IS TO CONNECT AND THE LOCATION OF THE DEVICE.

35. VERIFY FROM THE APPROVED SHOP DRAWINGS THE NUMBER OF DEVICES WHICH REQUIRE CONNECTION AND PROVIDE RACEWAY AND CONDUCTORS OF NOTE 34 TO EACH DEVICE.

36. FOUR 1" CONDUITS TO CONTAIN CONTROL WIRING BETWEEN THE GENERATOR CONTROL PANEL AND THE IMPULSE TURBINE.

37. ONE 1 1/4" CONDUIT BETWEEN THE JET DEFLECTOR CONTROL SYSTEM CABINET AND THE JET DEFLECTOR MECHANISM WITH THE CONTROL CONDUCTORS AS REQUIRED.

38. 3/4" LIQUID-TIGHT FLEXIBLE CONDUIT WITH ONE #12 TW GROUND CONDUCTOR AND CONTROL CONDUCTORS AS REQUIRED. VERIFY FROM THE APPROVED SHOP DRAWINGS THE ACTUAL DEVICE AND ITS LOCATION.

39. 1" CONDUIT WITH CONDUCTORS AS REQUIRED BETWEEN THE FLOW METER ENCLOSURE IN THE METER PIT AND THE FLOW METER INDICATING DEVICES IN THE GENERATOR CONTROL PANEL. VERIFY THE NUMBER, SIZE, AND TYPE OF CONDUCTORS WITH THE FLOW METER SUPPLIER.

NOTES:

1. SEE SITE PLAN FOR CONTINUATION.

2. MEDIUM VOLTAGE CONTROLLER SUCH AS SQUARE D ISO-FLEX MODEL 2 CLASS 8198. THIS UNIT SHALL HAVE 2 HIGH CONSTRUCTION CONTAINING 2 SEPARATE INDIVIDUAL CONTACTORS; ONE CONTACTOR FOR THE GENERATOR AND ONE CONTACTOR FOR THE POWER FACTOR CORRECTION CAPACITOR. EACH CONTACTOR SHALL BE RATED FOR 5000 VOLT 360 AMP OPERATION.

   THE CAPACITOR CONTACTOR ASSEMBLY SHALL INCLUDE THE FOLLOWING:

   DRAWOUT 3 POLE CONTACTOR RATED TO HANDLE CONNECTION TO THE SPECIFIED CAPACITORS.

   THREE CURRENT LIMITING FUSES.

   CONTROL TRANSFORMER WITH PRIMARY FUSES.

   ELECTRICAL DOOR INTERLOCKS.

   PUSH BUTTON TO CLOSE CONTACTOR

   PUSH BUTTON TO OPEN CONTACTOR

   ALL ASSOCIATED SAFETY CONTROLS REQUIRED FOR THIS EQUIPMENT.

   THE CAPACITOR CONTACTOR SHALL HAVE MANUAL PUSH BUTTON OPERATION AND SHALL NOT BE ARRANGED FOR ANY AUTOMATIC OPERATION.

   THE GENERATOR CONTACTOR ASSEMBLY SHALL BE ARRANGED FOR AUTOMATIC OPERATION. IF THERE IS NOT ENOUGH ROOM WITHIN THE CONTROLLER CABINET, THE ADJACENT METERING CUBICLE SHALL HOUSE THE REMAINING CONTROLS, RELAYS AND OTHER DEVICES. THE GENERATOR CONTACTOR ASSEMBLY SHALL INCLUDE THE FOLLOWING:

   DRAWOUT 3 POLE CONTACTOR RATED TO HANDLE THE STARTING CURRENT OF A 1000 H.P. SQUIRREL CAGE INDUCTION MOTOR.

   ONE SET OF AUXILIARY DRY CONTACTS THAT ARE CLOSED WHENEVER THE CONTACTOR IS CLOSED AND OPEN WHENEVER THE CONTACTOR IS OPEN.

   THREE CURRENT LIMITING POWER FUSES.

   CONTROL TRANSFORMER WITH PRIMARY FUSES.

   ELECTRICAL DOOR INTERLOCKS.

   COMPONENTS OF ALL FUNCTIONAL OPERATING DEVICES ASSOCIATED WITH GENERATOR CONTROL AS SPECIFIED ON THE SINGLE LINE DIAGRAM.

   ALL ASSOCIATED SAFETY CONTROLS REQUIRED FOR THIS EQUIPMENT.

△ 3. FLOOR MOUNTED POWER FACTOR CORRECTION CAPACITOR WITH DUST COVER AND FUSES AS SPECIFIED IN SPECIFICATION NO. 2, SECTION 16201.

4. METERING CUBICLE. THIS SHALL BE A NEMA 1 FREE STANDING FLOOR MOUNTED UNIT APPROXIMATELY 42" X 36" X 104" HIGH. THIS UNIT SHALL CONTAIN ALL THE FUNCTIONAL OPERATING DEVICES ASSOCIATED WITH GENERATOR CONTROL, RELAYS, SWITCHES, AND DEVICES THAT CANNOT BE MOUNTED WITH THE MEDUIM VOLTAGE CONTROLLER OF NOTE 2.

5. SINGLE PHASE FULL VOLTAGE 2 POLE NEMA SIZE 1 STARTER SURFACE MOUNTED ON WALL AT +66" IN NEMA 1 ENCLOSURE.

6. SEE EXHAUST FAN CONTROL WIRING DIAGRAM.

7. SURFACE WALL MOUNTED THERMOSTAT AT +69".

8. EXHAUST FAN 3/4 H.P. SINGLE PHASE 230 VOLTS.

9. 1/2" LIQUID TIGHT FLEX CONDUIT WITH 2 #12 & 1 #12 GROUND.

10. GENERATOR TERMINAL BOX.

11. 4" CONDUIT WITH THREE #2/0, 5 KV CABLES AND ONE #2 BARE GROUND CONDUCTOR.

12. 5" CONDUIT WITH THREE #2/0, 5 KV CABLES AND ONE #2/0 THW NEUTRAL CONDUCTOR.

13. 5" CONDUIT WITH THREE #2/0, 5 KV CABLES AND ONE #2/0 THW NEUTRAL CONDUCTOR.

14. RACEWAY AND CONDUCTORS OF SITE PLAN NOTE 12.

15. MOUNT ON THE SIDE OF THE GENERATOR FOUNDATION PAD AT +12".

16. #4/0 BARE STRANDED COPPER CONDUCTOR LOCATED WITHIN THE BUILDING FOUNDATION CONCRETE APPROXIMATELY 2" ABOVE THE BOTTOM OF THE CONCRETE. THIS GROUNDING ELECTRODE SHALL BE INSTALLED ACCORDING TO 1981 N.E.C. ARTICLE 250-81.C.

NO.	DATE	REVISIONS	BY
△	1-84	GENERAL REVISIONS	RGC

PROJECT NO. 3832		DATE
DESIGNED BY D. Bryner		7-9-81
DRAWN BY K.K. Nikhoka		7-9-81
CHECKED BY R Chapman		7-9-81
ENGINEER N. Pressman		
REGISTRATION NO. C 19981	DATE 7-16-81	

ENGINEERING-SCIENCE
DESIGN • RESEARCH • PLANNING
4611 TELLER AVE. • NEWPORT BEACH, CALIFORNIA 92660 • 714/851-9891
OFFICES IN PRINCIPAL CITIES

ES

STENNER CANYON HYDROELECTRIC PROJECT

SAN LUIS OBISPO, CALIFORNIA

HYDROELECTRIC PLANT

HYDROELECTRIC BUILDING

POWER PLAN

SCALE 3/8" = 1'-0"

SHEET NO. E-1.1

FILE NO.

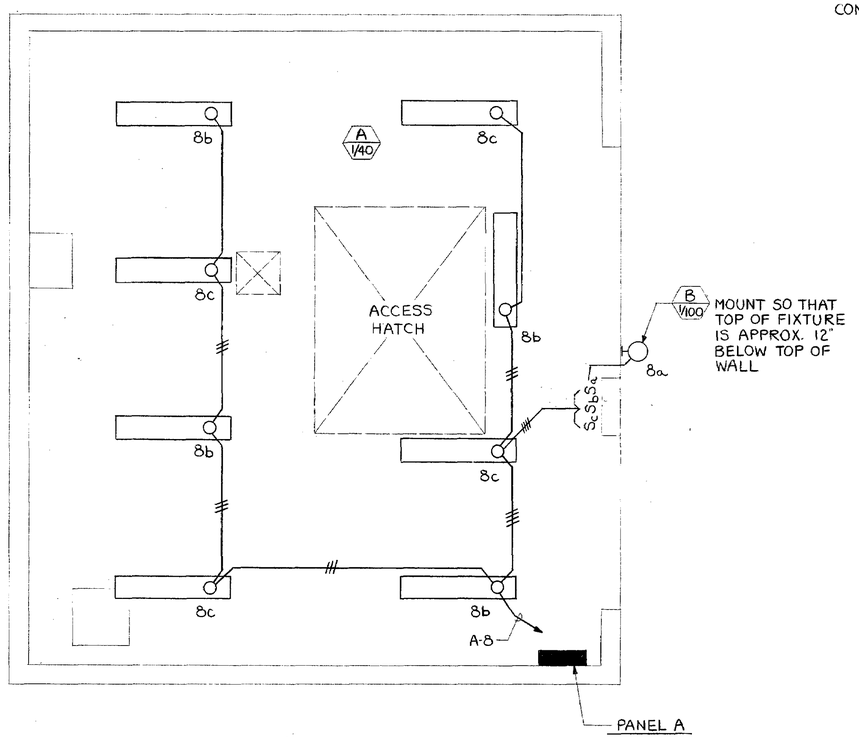

HYDROELECTRIC BUILDING
LIGHTING PLAN
3/8" = 1'-0"

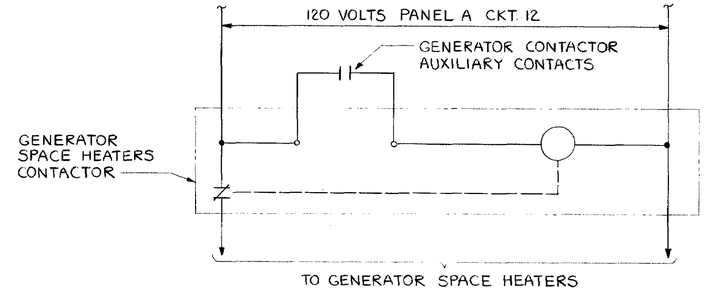

GENERATOR SPACE HEATERS

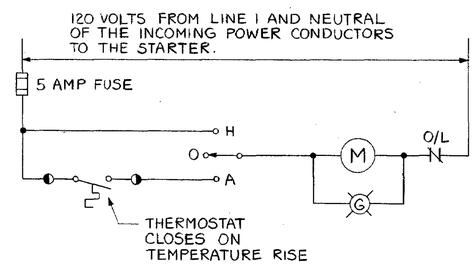

EXHAUST FAN

CONTROL WIRING DIAGRAMS
N.T.S.

NO.	DATE	REVISIONS	BY

		DATE
PROJECT NO.	3832	
DESIGNED BY	D. Bryner	7-9-81
DRAWN BY	K.K. Nishioka	7-9-81
CHECKED BY	R Chapman	7-9-81
ENGINEER		
REGISTRATION NO.	C 19981	DATE 7-16-81

ENGINEERING-SCIENCE
DESIGN • RESEARCH • PLANNING
4611 TELLER AVE. • NEWPORT BEACH, CALIFORNIA 92660 • 714/851-9891
OFFICES IN PRINCIPAL CITIES

ES

STENNER CANYON HYDROELECTRIC PROJECT
SAN LUIS OBISPO, CALIFORNIA

HYDROELECTRIC PLANT
HYDROELECTRIC BUILDING LIGHTING PLAN
AND CONTROL WIRING DIAGRAMS

SCALE: AS NOTED
SHEET NO. E-1.2
FILE NO.