general notes

1. IT SHALL BE THE RESPONSIBILITY OF THE CONTRACTOR OR PERMITTEE TO CONTACT "UNDERGROUND SERVICE ALERT U.S.A." TOLL FREE AT 1-800-227-2600 FORTY-EIGHT (48) HOURS PRIOR TO START OF CONSTRUCTION, FOR LOCATION OF POWER, TELEPHONE, OIL AND NATURAL GAS UNDERGROUND FACILITIES. CONTRACTOR OR PERMITEE SHALL ALSO CONTACT THE APPROPRIATE AGENCY FOR THE LOCATION OF CABLE T.V., WATER, SEWER, DRAINAGE OR UNDERGROUND FACILITIES.

2. THE CONTRACTOR SHALL POSSESS A CLASS "A" OR C34 LICENSE AT THE TIME THE CONTRACT IS AWARDED.

Metric datum:

HORIZONTAL CONTROL FOR POINTS 8007 & 8009 AS PUBLISHED IN THE CITY OF SAN LUIS OBISPO 1999 HORIZONTAL CONTROL NETWORK. CITY NETWORK IS BASED ON THE NORTH AMERICAN DATUM OF 1983 (NAD83) EPOCH DATE 1991.35, ZONE 5 CALIFORNIA.

VERTICAL CONTROL BENCHMARK NO.(S) 5-279 AS PUBLISHED IN THE CITY OF SAN LUIS OBISPO 1996 BENCHMARK SYSTEM. CITY'S BENCHMARK SYSTEM IS GENERALLY 52MM HIGHER THAN THE NORTH AMERICA VERTICAL DATUM OF 1929 (NAVD29).

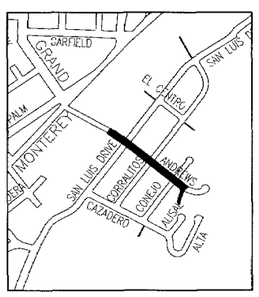

SITE LOCATION

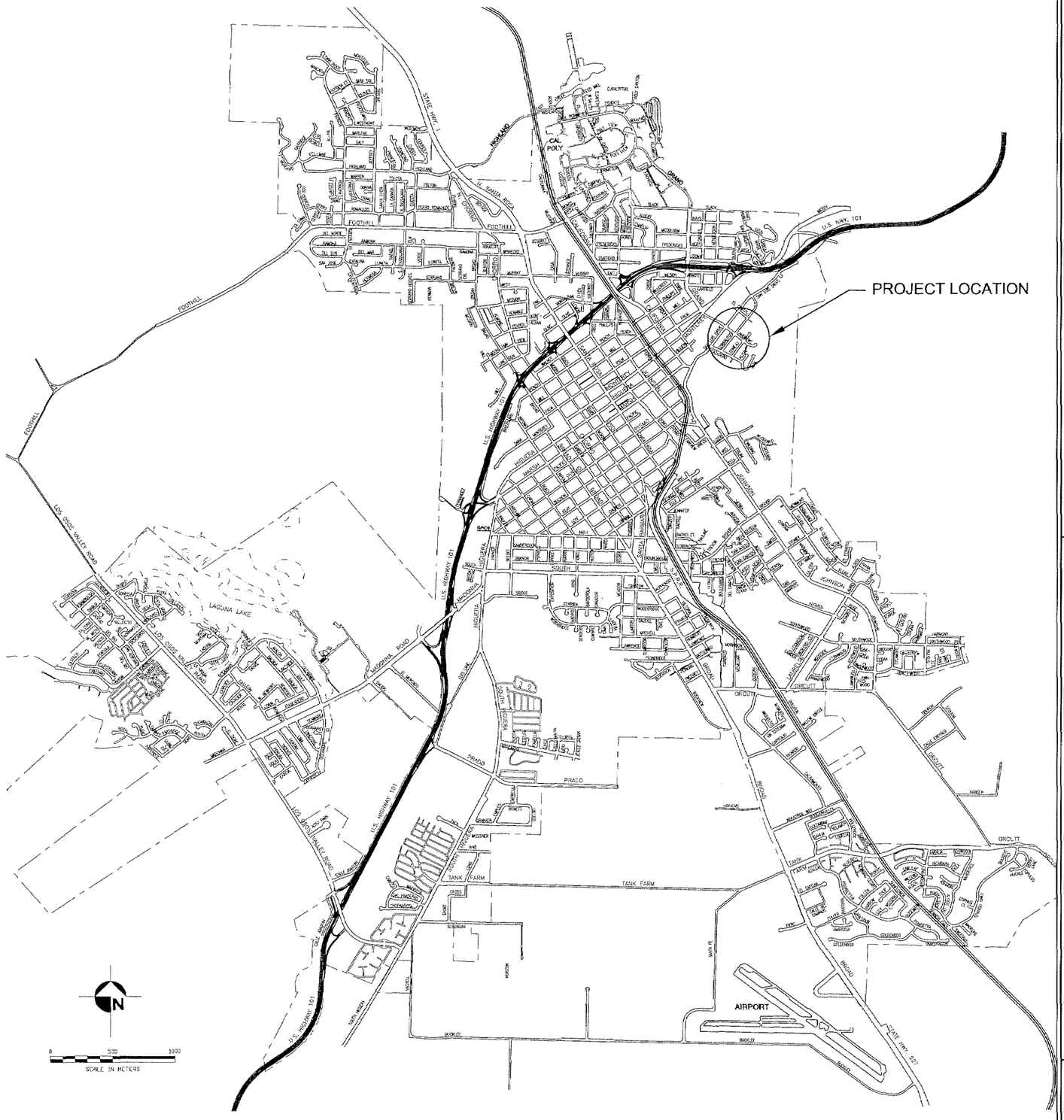

index to plans

city of san luis obispo

san luis obispo county, california

ANDREWS - CONEJO STORM DRAINAGE IMPROVEMENTS

REGISTERED PROFESSIONAL ENGINEER
WAYNE A. PETERSON
No. 18598
exp.
CIVIL
STATE OF CALIFORNIA

SPECIFICATION NO. 99704B

APPROVED BY

Wayne A. Peterson *R.C.E. 18598*
City Engineer

DATE	4/19/99
FILE NO./LOCATION	COVER_M.DWG
SHEET	1 OF 8

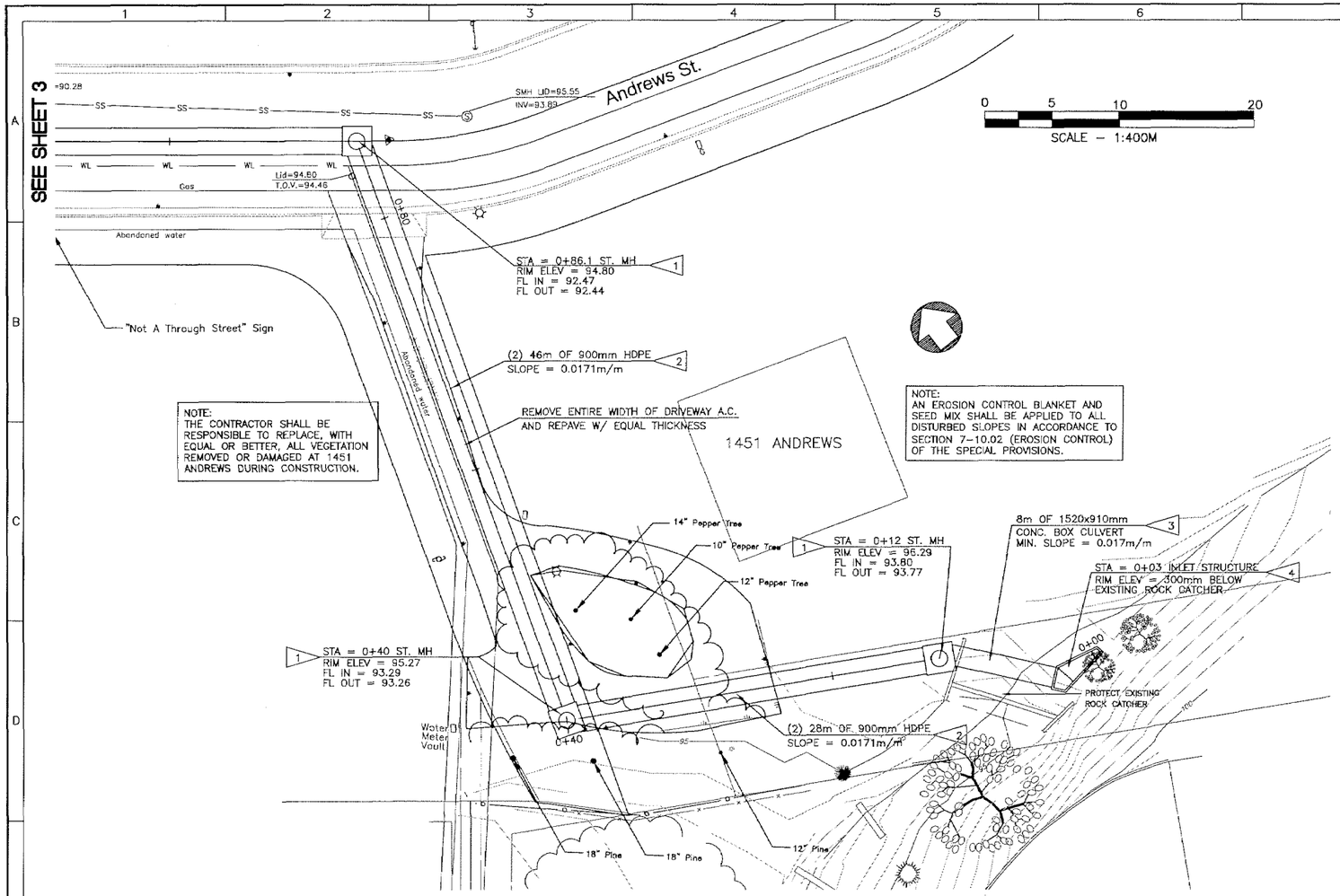

CONSTRUCTION NOTES:

1. CONSTRUCT MANHOLE (SEE DETAIL ON SHT. 6)
2. CONSTRUCT (2) PARALLEL 900mm HDPE STORM DRAINS
3. CONSTRUCT 1520x910mm CONCRETE BOX CULVERT
4. CONSTRUCT INLET. TOP OF INLET SHALL BE 300mm BELOW ROCK CATCHER. FINAL LOCATION TO BE DETERMINED IN FIELD. (SEE DETAIL ON SHT. 5)
5. CONSTRUCT OUTFALL STRUCTURE (SEE DETAIL ON SHT. 7).
6. REPLACE EXISTING SANITARY SEWER LINE WITH PVC PIPE FROM SEWER MANHOLE TO 600mm BEYOND STORM DRAIN TRENCH (APPROX. 5 METERS)
7. RE-ESTABLISH CENTERLINE SURVEY MONUMENTS IMMEDIATELY FOLLOWING CONSTRUCTION. CITY STND. 9020.

REGISTERED PROFESSIONAL ENGINEER
WAYNE A. PETERSON
No. 18598
exp.
CIVIL
STATE OF CALIFORNIA

LEGEND

Existing Sewer Manhole	Existing Underground Sewer
Existing Stop Sign	Existing Underground Water
Existing Street Sign	Existing Underground Gas
Existing Water Meter	Existing Wood Barricade
Existing Sewer Cleanout	Existing Wood Fence
Existing Street Light	Existing Water Valve
Existing Power Pole	Found City Benchmark
Existing Guy Wire	Existing Curb and Gutter
Existing Fire Hydrant	Existing Edge of Pavement
Existing Gas Meter	Found City Well Monument
Existing Gas Valve	

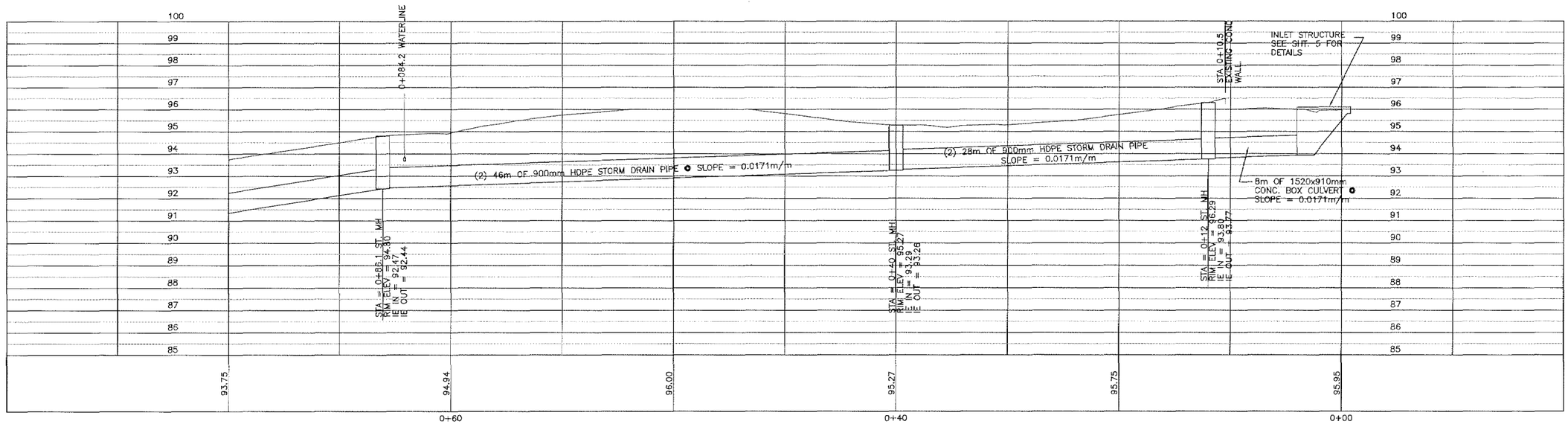

REVISIONS:

city of san luis obispo

PROJECT TITLE: ANDREWS - CONEJO STORM DRAINAGE IMPROVEMENTS

SHEET TITLE: PLAN AND PROFILE (STA = 0+00 TO 0+90)

DATE: 6/29/99

DRAWN BY: JAV

CHECKED BY: WAP

FILE NO. / LOCATION: 9704B-2.DWG

SPECIFICATION NO. 9704B

SHEET NO. 2

TOTAL NUMBER OF SHTS: 8

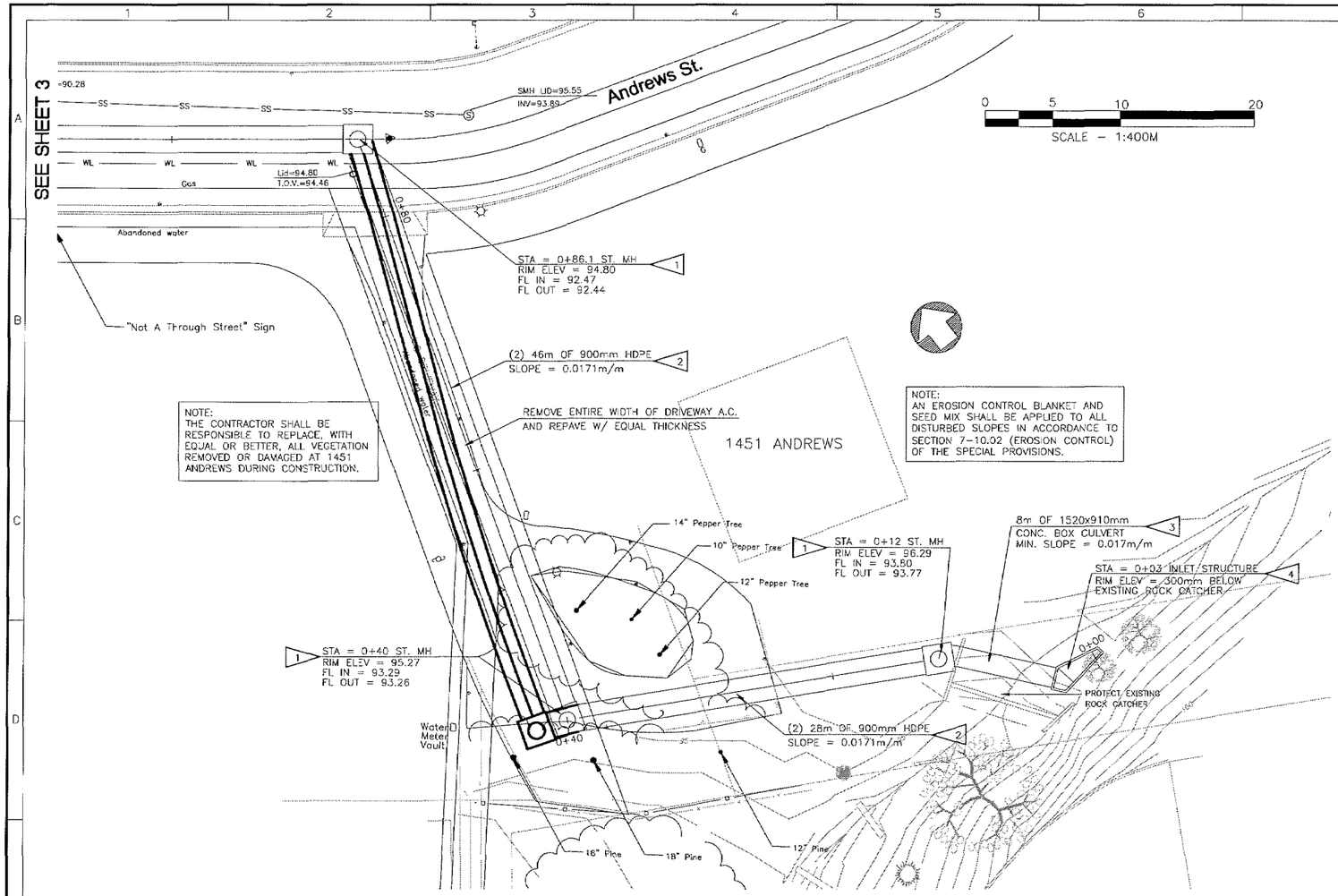

0 5 10 20

SCALE – 1:400M

CONSTRUCTION NOTES:

1. CONSTRUCT MANHOLE (SEE DETAIL ON SHT. 6)
2. CONSTRUCT (2) PARALLEL 900mm HDPE STORM DRAINS
3. CONSTRUCT 1520x910mm CONCRETE BOX CULVERT
4. CONSTRUCT INLET. TOP OF INLET SHALL BE 300mm BELOW ROCK CATCHER. FINAL LOCATION TO BE DETERMINED IN FIELD. (SEE DETAIL ON SHT. 5)
5. CONSTRUCT OUTFALL STRUCTURE (SEE DETAIL ON SHT. 7).
6. REPLACE EXISTING SANITARY SEWER LINE WITH PVC PIPE FROM SEWER MANHOLE TO 600mm BEYOND STORM DRAIN TRENCH (APPROX. 5 METERS)
7. RE-ESTABLISH CENTERLINE SURVEY MONUMENTS IMMEDIATELY FOLLOWING CONSTRUCTION. CITY STND. 9020.

LEGEND

- Existing Sewer Manhole
- Existing Stop Sign
- Existing Street Sign
- Existing Water Meter
- Existing Sewer Cleanout
- Existing Street Light
- Existing Power Pole
- Existing Guy Wire
- Existing Fire Hydrant
- Existing Gas Meter
- Existing Gas Valve
- Existing Underground Sewer
- Existing Underground Water
- Existing Underground Gas
- Existing Wood Barricade
- Existing Wood Fence
- Existing Water Valve
- Found City Benchmark
- Existing Curb and Gutter
- Existing Edge of Pavement
- Found City Well Monument

RECORD DRAWING
DATE: 10/23/2000 BY: SR

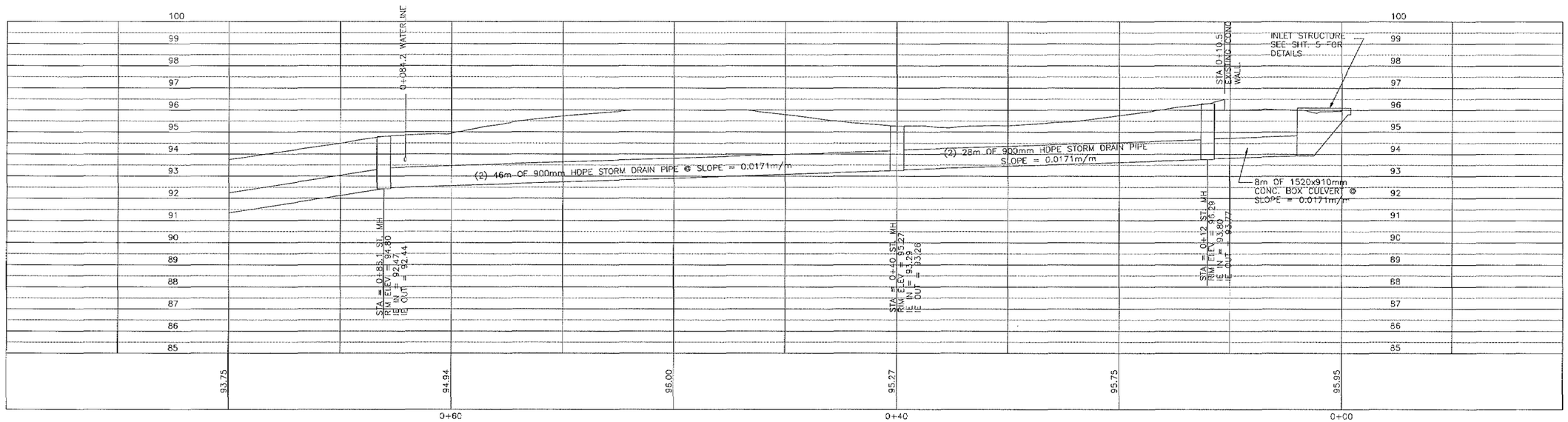

REVISIONS:

REGISTERED PROFESSIONAL ENGINEER WAYNE A. PETERSON No. 18598 Exp. 6/30 STATE OF CALIFORNIA

city of san luis obispo

PROJECT TITLE: ANDREWS – CONEJO STORM DRAINAGE IMPROVEMENTS

SHEET TITLE: PLAN AND PROFILE (STA = 0+00 TO 0+90)

DATE: 6/29/99

DRAWN BY: JAV

CHECKED BY: WAP

FILE NO. / LOCATION: 9704B-2.DWG

SPECIFICATION NO. 9704B

SHEET NO. 2A

TOTAL NUMBER OF SHTS: 8

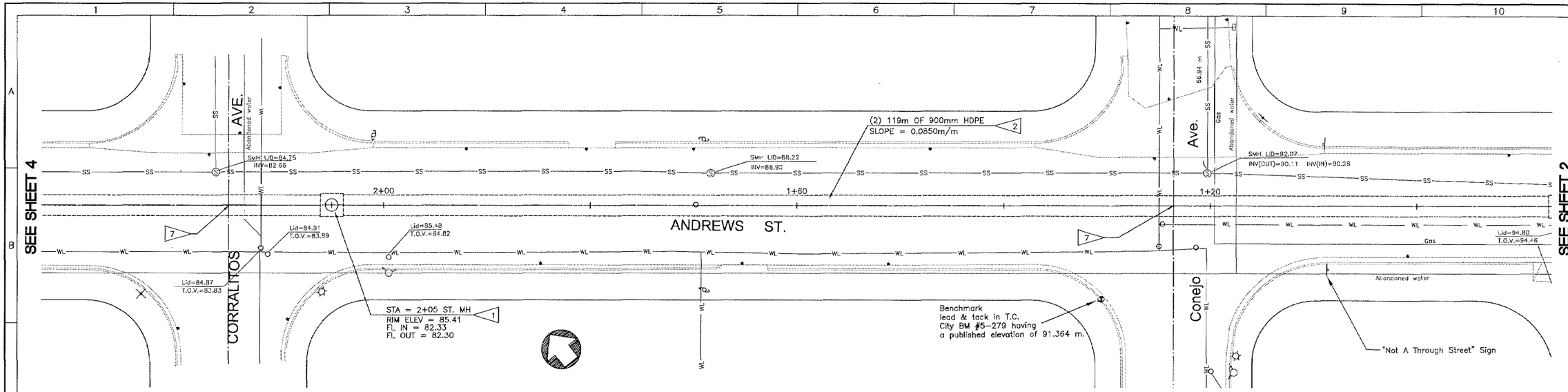

CONSTRUCTION NOTES:

1. CONSTRUCT MANHOLE (SEE DETAIL ON SHT. 6)
2. CONSTRUCT (2) PARALLEL 900mm HDPE STORM DRAINS
3. CONSTRUCT 1520x910mm CONCRETE BOX CULVERT
4. CONSTRUCT INLET. TOP OF INLET SHALL BE 300mm BELOW ROCK CATCHER. FINAL LOCATION TO BE DETERMINED IN FIELD. (SEE DETAIL ON SHT. 5)
5. CONSTRUCT OUTFALL STRUCTURE (SEE DETAIL ON SHT. 7).
6. REPLACE EXISTING SANITARY SEWER LINE WITH PVC PIPE FROM SEWER MANHOLE TO 600mm BEYOND STORM DRAIN TRENCH (APPROX. 5 METERS)
7. RE-ESTABLISH CENTERLINE SURVEY MONUMENTS IMMEDIATELY FOLLOWING CONSTRUCTION. CITY STND. 9020.

LEGEND

- *Existing Sewer Manhole*
- *Existing Stop Sign*
- *Existing Street Sign*
- *Existing Water Meter*
- *Existing Sewer Cleanout*
- *Existing Street Light*
- *Existing Power Pole*
- *Existing Guy Wire*
- *Existing Fire Hydrant*
- *Existing Gas Meter*
- *Existing Gas Valve*
- *Existing Underground Sewer*
- *Existing Underground Water*
- *Existing Underground Gas*
- *Existing Wood Barricade*
- *Existing Wood Fence*
- *Existing Water Valve*
- *Found City Benchmark*
- *Existing Curb and Gutter*
- *Existing Edge of Pavement*
- *Found City Well Monument*

0 5 10 20
SCALE – 1:400M

REGISTERED PROFESSIONAL ENGINEER
WAYNE A. PETERSON
No. 18598
exp.
CIVIL
STATE OF CALIFORNIA

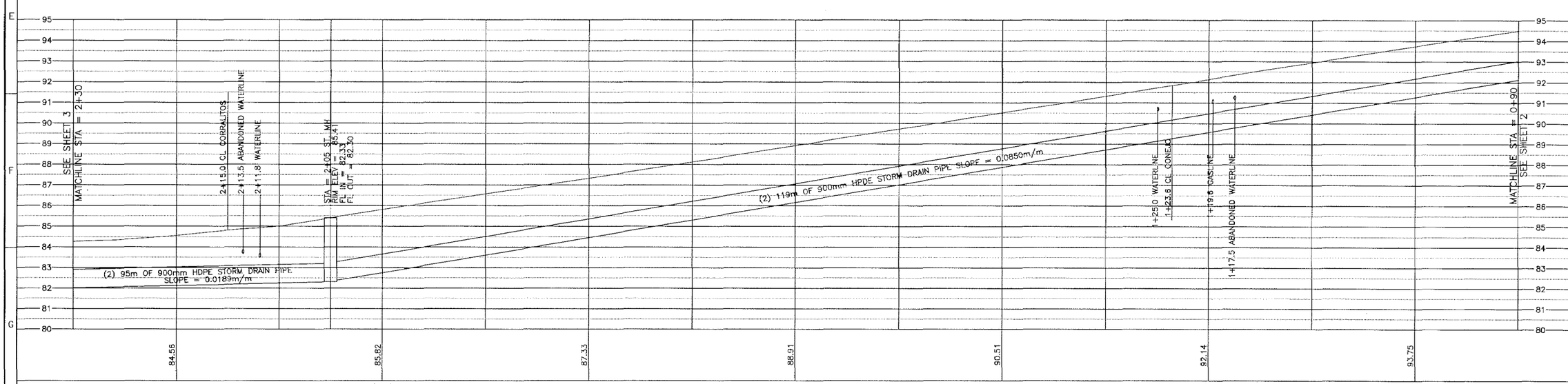

REVISIONS:

city of san luis obispo

PROJECT TITLE: ANDREWS - CONEJO STORM DRAINAGE IMPROVEMENTS

SHEET TITLE: PLAN AND PROFILE (STA 0+80 TO 2+40)

DATE: 6/29/99

DRAWN BY: JAV

CHECKED BY: WAP

FILE NO. / LOCATION: 9704B-3.DWG

SPECIFICATION NO. 9704B

SHEET NO. 3

TOTAL NUMBER OF SHTS: 8

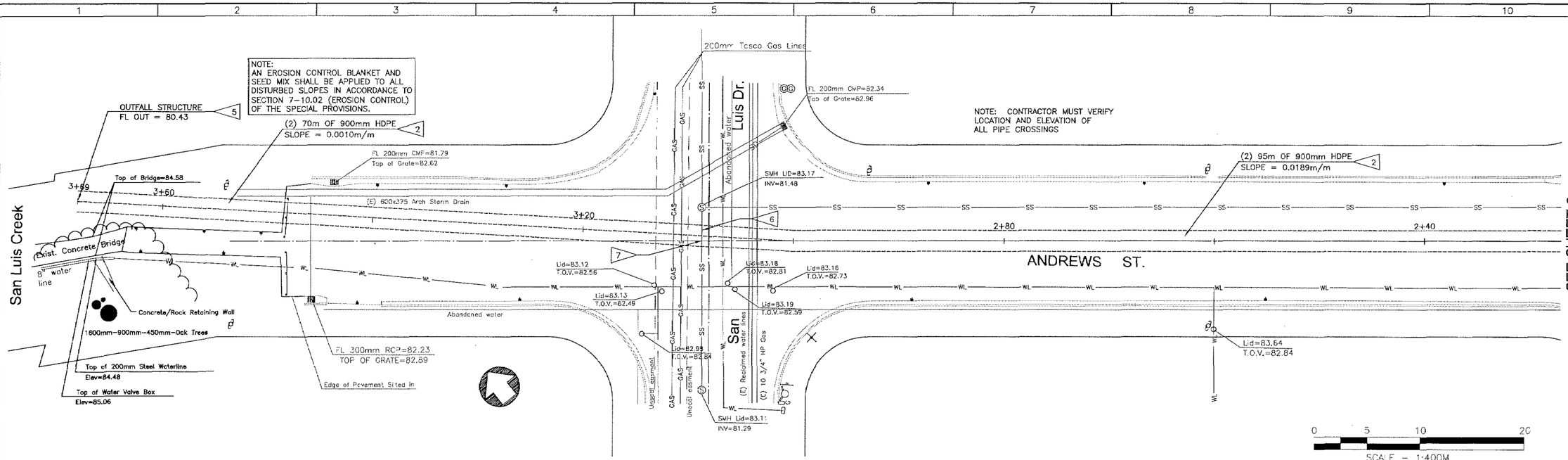

CONSTRUCTION NOTES:

1. CONSTRUCT MANHOLE (SEE DETAIL ON SHT. 6)
2. CONSTRUCT (2) PARALLEL 900mm HDPE STORM DRAINS
3. CONSTRUCT 1520x910mm CONCRETE BOX CULVERT
4. CONSTRUCT INLET. TOP OF INLET SHALL BE 300mm BELOW ROCK CATCHER. FINAL LOCATION TO BE DETERMINED IN FIELD. (SEE DETAIL ON SHT. 5)
5. CONSTRUCT OUTFALL STRUCTURE (SEE DETAIL ON SHT. 7).
6. REPLACE EXISTING SANITARY SEWER LINE WITH PVC PIPE FROM SEWER MANHOLE TO 600mm BEYOND STORM DRAIN TRENCH (APPROX. 5 METERS)
7. RE-ESTABLISH CENTERLINE SURVEY MONUMENTS IMMEDIATELY FOLLOWING CONSTRUCTION. CITY STND. 9020.

LEGEND

- Existing Sewer Manhole
- Existing Stop Sign
- Existing Street Sign
- Existing Water Meter
- Existing Sewer Cleanout
- Existing Street Light
- Existing Power Pole
- Existing Guy Wire
- Existing Fire Hydrant
- Existing Gas Meter
- Existing Gas Valve
- Existing Underground Sewer
- Existing Underground Water
- Existing Underground Gas
- Existing Wood Barricade
- Existing Wood Fence
- Existing Water Valve
- Found City Benchmark
- Existing Curb and Gutter
- Existing Edge of Pavement
- Found City Well Monument

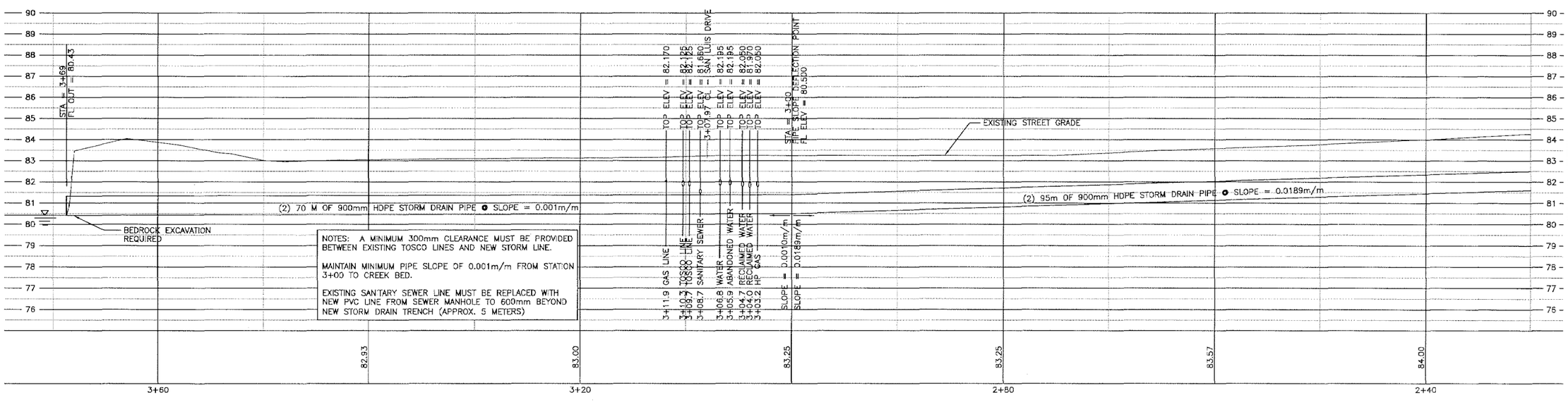

NOTES: A MINIMUM 300mm CLEARANCE MUST BE PROVIDED BETWEEN EXISTING TOSCO LINES AND NEW STORM LINE.

MAINTAIN MINIMUM PIPE SLOPE OF 0.001m/m FROM STATION 3+00 TO CREEK BED.

EXISTING SANITARY SEWER LINE MUST BE REPLACED WITH NEW PVC LINE FROM SEWER MANHOLE TO 600mm BEYOND NEW STORM DRAIN TRENCH (APPROX. 5 METERS)

REGISTERED PROFESSIONAL ENGINEER
WAYNE A. PETERSON
No. 18598
exp.
CIVIL
STATE OF CALIFORNIA

REVISIONS:

city of san luis OBISPO

PROJECT TITLE: ANDREWS - CONEJO STORM DRAINAGE IMPROVEMENTS

SHEET TITLE: PLAN AND PROFILE (STA = 2+40 TO END)

DATE: 6/29/99

DRAWN BY: JAV

CHECKED BY: WAP

FILE NO. / LOCATION: 9704B-4.DWG

SPECIFICATION NO. 9704B

SHEET NO. 4

TOTAL NUMBER OF SHTS: 8

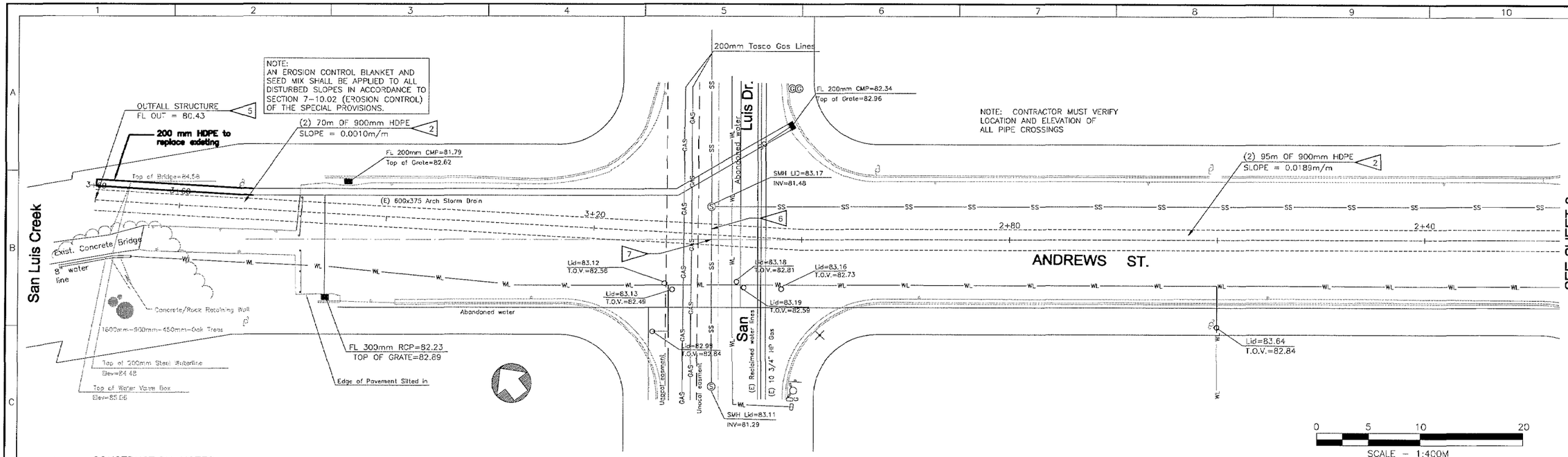

CONSTRUCTION NOTES:

1. CONSTRUCT MANHOLE (SEE DETAIL ON SHT. 6)
2. CONSTRUCT (2) PARALLEL 900mm HDPE STORM DRAINS
3. CONSTRUCT 1520x910mm CONCRETE BOX CULVERT
4. CONSTRUCT INLET. TOP OF INLET SHALL BE 300mm BELOW ROCK CATCHER. FINAL LOCATION TO BE DETERMINED IN FIELD. (SEE DETAIL ON SHT. 5)
5. CONSTRUCT OUTFALL STRUCTURE (SEE DETAIL ON SHT. 7).
6. REPLACE EXISTING SANITARY SEWER LINE WITH PVC PIPE FROM SEWER MANHOLE TO 600mm BEYOND STORM DRAIN TRENCH (APPROX. 5 METERS)
7. RE-ESTABLISH CENTERLINE SURVEY MONUMENTS IMMEDIATELY FOLLOWING CONSTRUCTION. CITY STND. 9020.

LEGEND

Existing Sewer Manhole	Existing Underground Sewer
Existing Stop Sign	Existing Underground Water
Existing Street Sign	Existing Underground Gas
Existing Water Meter	Existing Wood Barricade
Existing Sewer Cleanout	Existing Wood Fence
Existing Street Light	Existing Water Valve
Existing Power Pole	Found City Benchmark
Existing Guy Wire	Existing Curb and Gutter
Existing Fire Hydrant	Existing Edge of Pavement
Existing Gas Meter	Found City Well Monument
Existing Gas Valve	

RECORD DRAWING
DATE: 10/23/2000 BY: SR

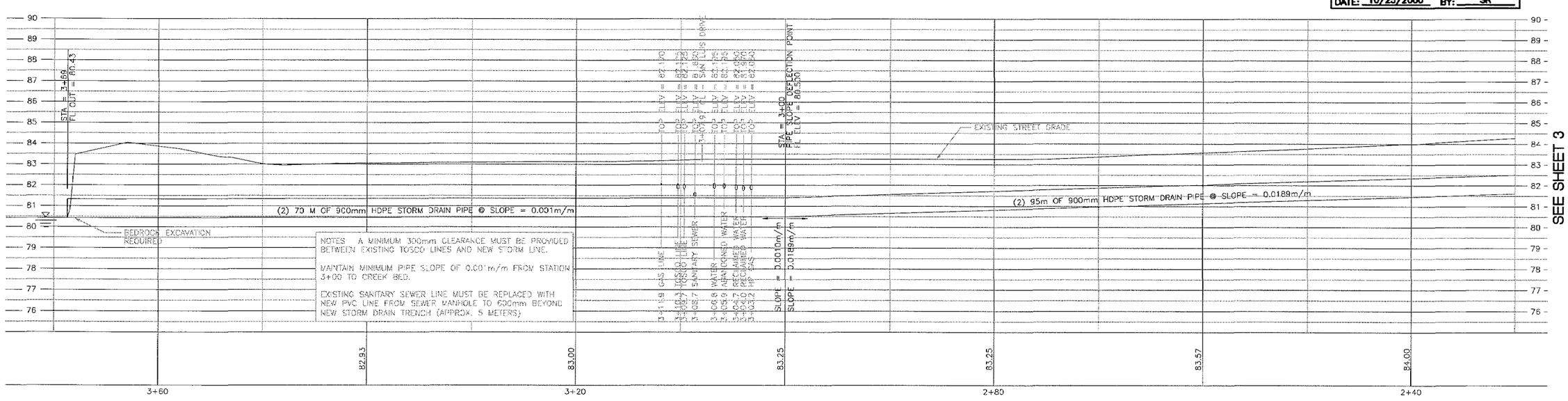

NOTES: A MINIMUM 300mm CLEARANCE MUST BE PROVIDED BETWEEN EXISTING TOSCO LINES AND NEW STORM LINE.

MAINTAIN MINIMUM PIPE SLOPE OF 0.001m/m FROM STATION 3+00 TO CREEK BED.

EXISTING SANITARY SEWER LINE MUST BE REPLACED WITH NEW PVC LINE FROM SEWER MANHOLE TO 600mm BEYOND NEW STORM DRAIN TRENCH (APPROX. 5 METERS)

REVISIONS:

REGISTERED PROFESSIONAL ENGINEER — WAYNE A. PETERSON — No. 18598 — exp. — CIVIL — STATE OF CALIFORNIA

city of san luis OBISPO

PROJECT TITLE: ANDREWS - CONEJO STORM DRAINAGE IMPROVEMENTS

SHEET TITLE: PLAN AND PROFILE (STA = 2+40 TO END)

DATE: 6/29/99
DRAWN BY: JAV
CHECKED BY: WAP
FILE NO. / LOCATION: 9704B-4.DWG
SPECIFICATION NO. 9704B
SHEET NO. 4A
TOTAL NUMBER OF SHTS: 8

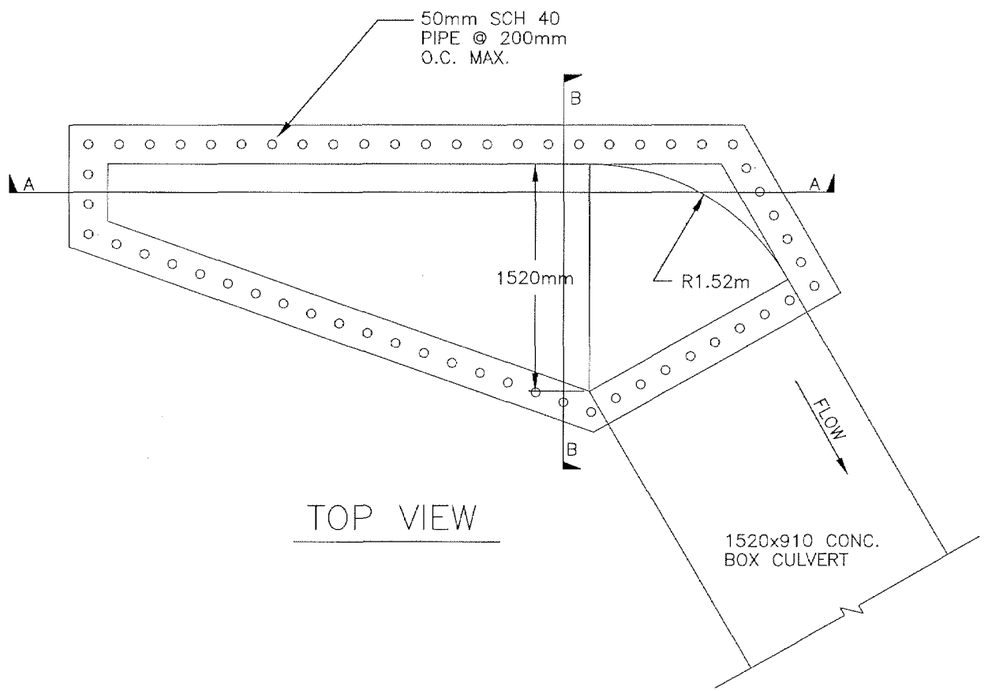

TOP VIEW

NOTE: USE #13 BARS @ 250mm. O.C. MAX. FOR ALL REINFORCEMENT. MINIMUM EDGE DISTANCE = 50mm

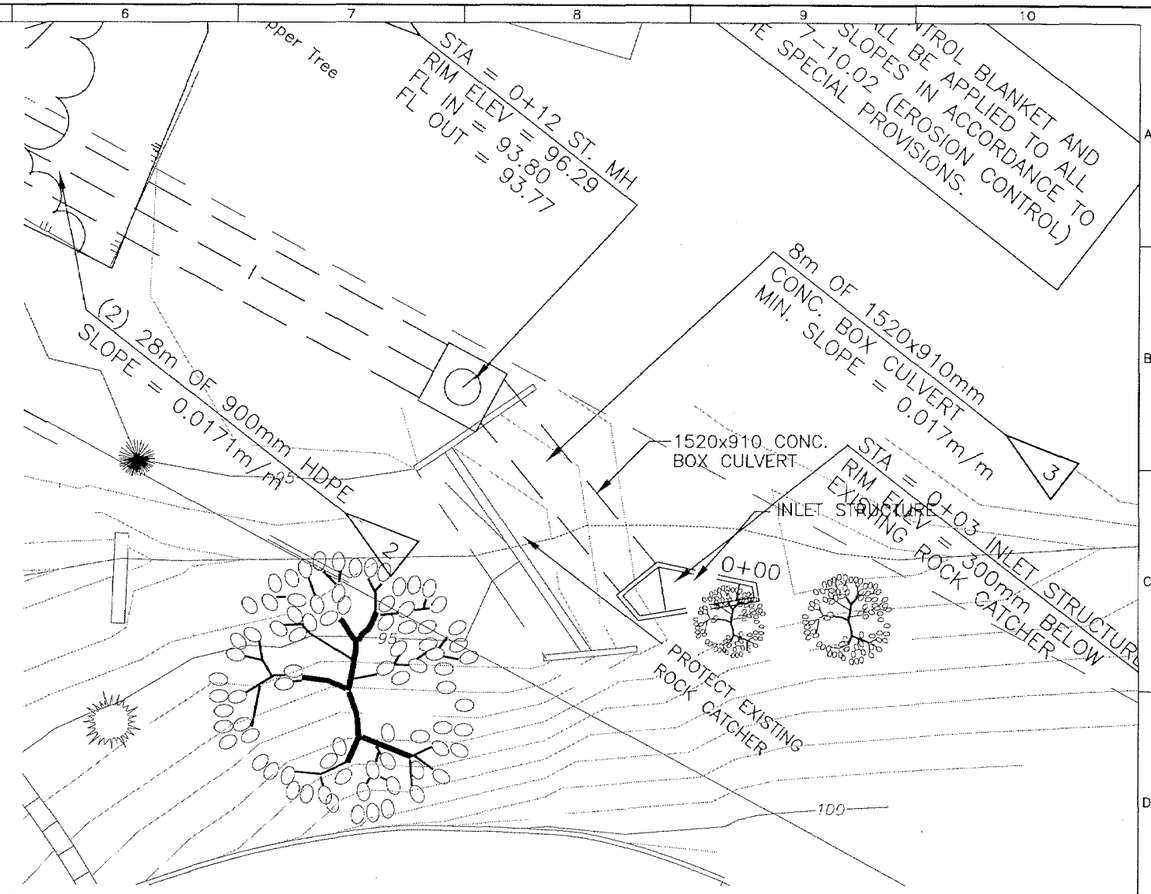

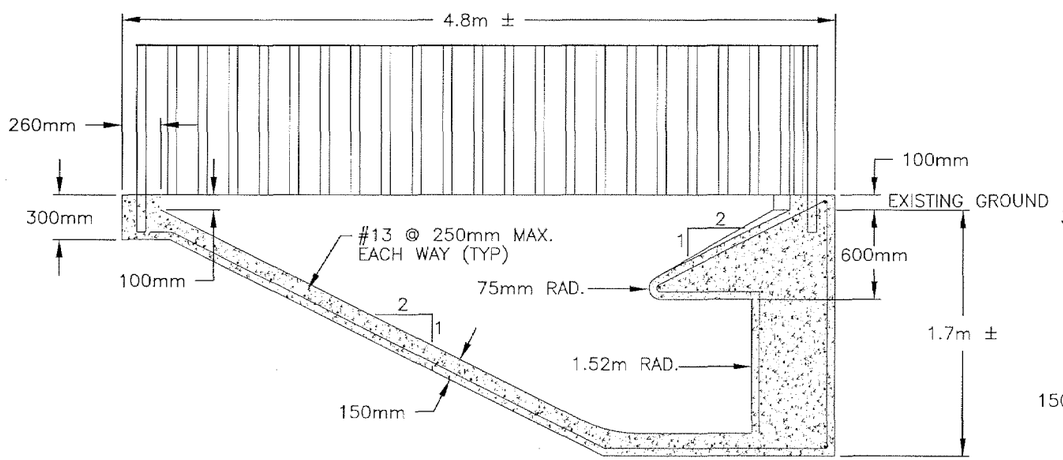

A–A SECTION VIEW

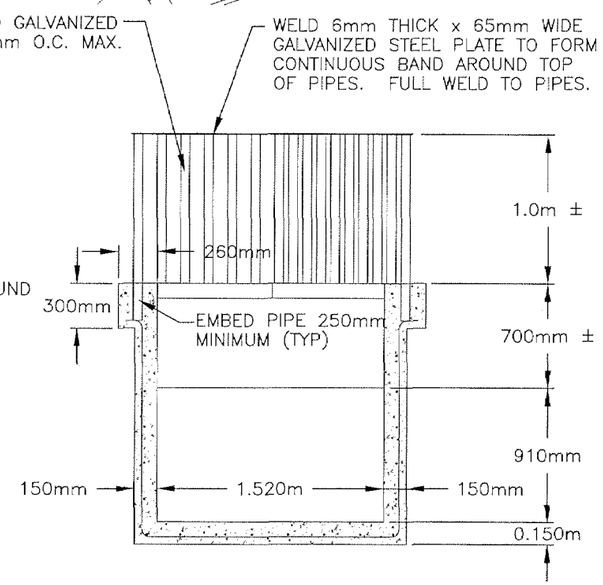

B–B SECTION VIEW

NOTE: TOP OF INLET STRUCTURE SHALL BE LOCATED APPROX. 300mm BELOW TOP OF EXISTING ROCK CATCHER.

REGISTERED PROFESSIONAL ENGINEER
WAYNE A. PETERSON
No. 18598
exp.
CIVIL
STATE OF CALIFORNIA

REVISIONS:

city of san luis OBISPO

PROJECT TITLE: ANDREWS - CONEJO STORM DRAINAGE IMPROVEMENTS

SHEET TITLE: INLET STRUCTURE DETAILS

DATE: 6/30/99

DRAWN BY: JAV

CHECKED BY: WAP

FILE NO. / LOCATION: 9704B-5.DWG

SPECIFICATION NO. 99704B

SHEET NO. 5

TOTAL NUMBER OF SHTS: 8

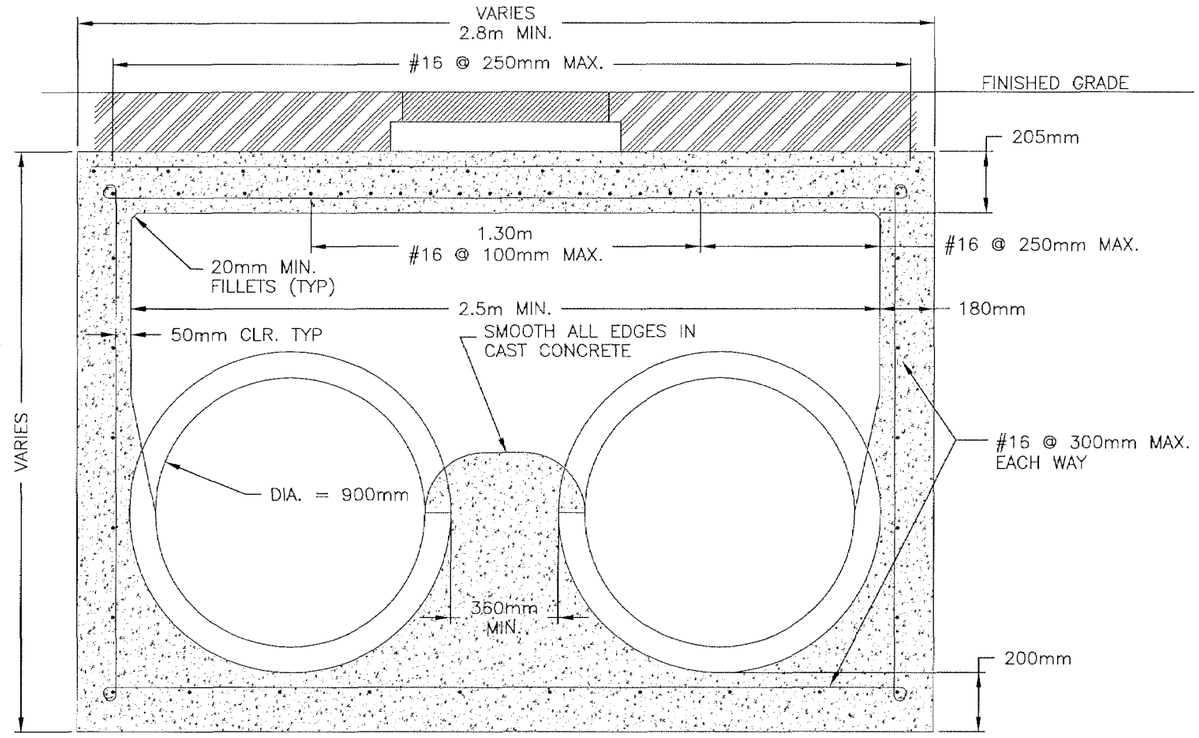

SECTION B–B
SCALE: 1:20m

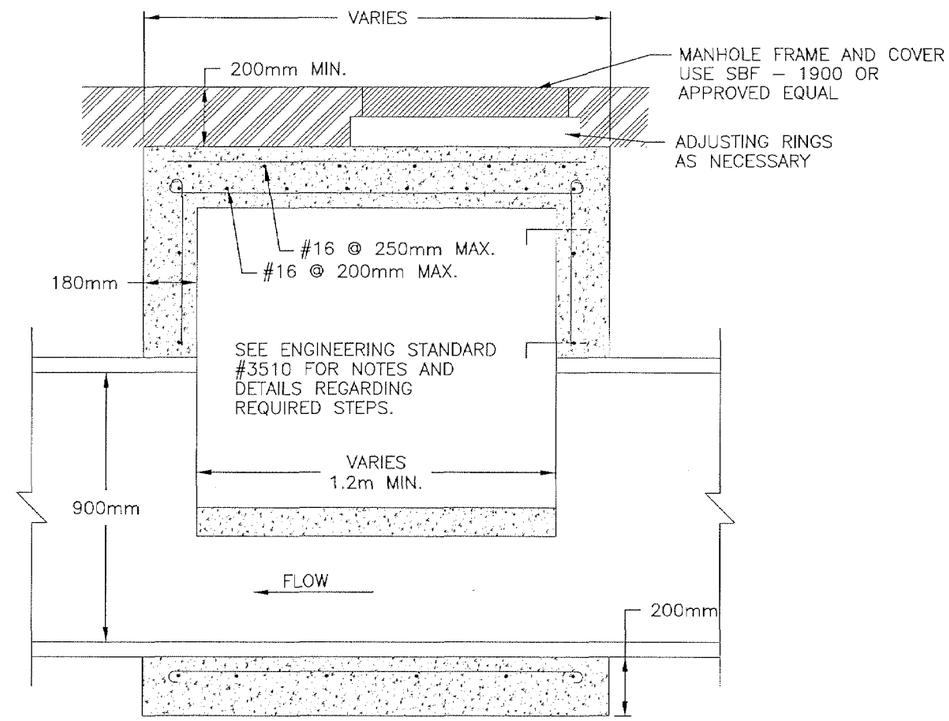

SECTION A–A
SCALE: 1:20m

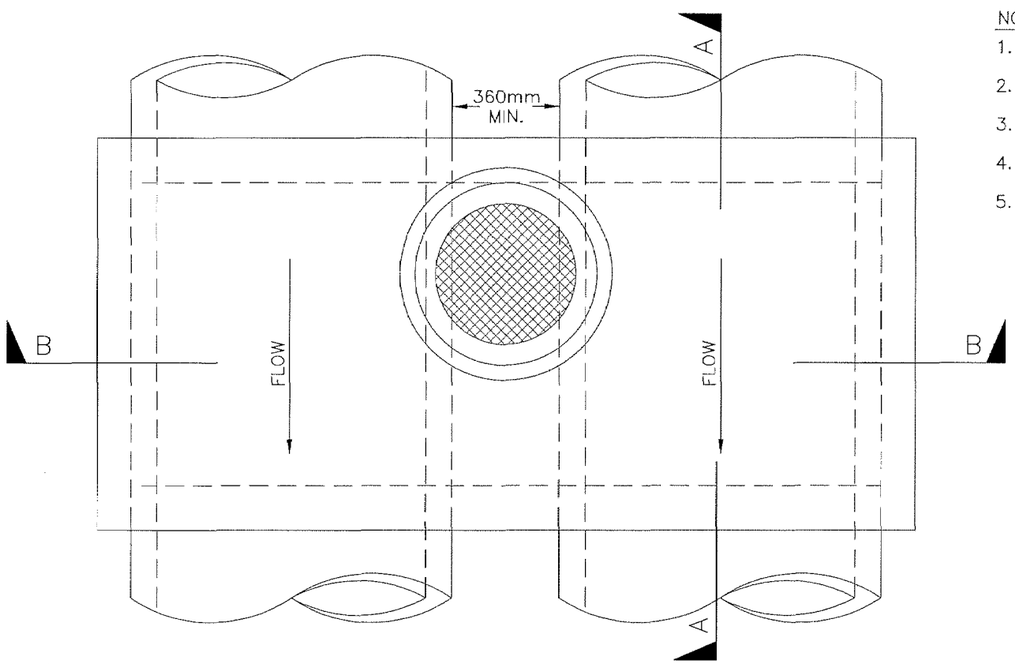

PLAN

NOTES:

1. MANHOLE INTERIORS SHALL HAVE SMOOTH TROWELED FINISH.
2. INLET AND OUTLET MAY BE IN ANY WALL.
3. MANHOLE #1 WILL HAVE 1520x910 CONC. BOX CULVERT INLET.
4. MAXIMUM ADJUSTING RINGS HEIGHT = 600mm.
5. APPROVED EQUAL PRE–CAST MANHOLE MAY BE USED.

REGISTERED PROFESSIONAL ENGINEER
WAYNE A. PETERSON
No. 18598
exp.
CIVIL
STATE OF CALIFORNIA

REVISIONS:

city of san luis obispo

PROJECT TITLE: ANDREWS – CONEJO STORM DRAINAGE IMPROVEMENTS

SHEET TITLE: MANHOLE STRUCTURE DETAILS

DATE: 6/30/99

DRAWN BY: JAV

CHECKED BY: WAP

FILE NO. / LOCATION: 9704B–6

SPECIFICATION NO. 99704B

SHEET NO. 6

TOTAL NUMBER OF SHTS: 8

EROSION CONTROL AND LANDSCAPING MEASURES

EROSION CONTROL BLANKET AND SEED MIX SHALL BE APPLIED TO ALL DISTURBED SLOPES. PRIOR TO PLACEMENT OF EROSION CONTROL BLANKET, THE DISTURBED SLOPES SHALL BE SEEDED WITH THE FOLLOWING SEED MIX AND CALIFORNIA BLACKBERRY (*RUBUS URSINUS*)

SEED (PERCENT MINIMUM PURITY AND GERMINATION)	KG per 1000 M2
Blando Brome – Bromus mollis (95%, 85%)	2.5
Zorro Fescue – Festuca megalura (85%,. 80%)	1.0
Rose Clover – Trifolium hirtum "Hykon" (95%, 90%)	3.5
inoculate with appropriate bacteria	0.5
California Poppy – Eschscholzia californica (95%, 75%)	0.5
Succulent Lupine – Lupinus succulentus (95%, 75%)	0.5

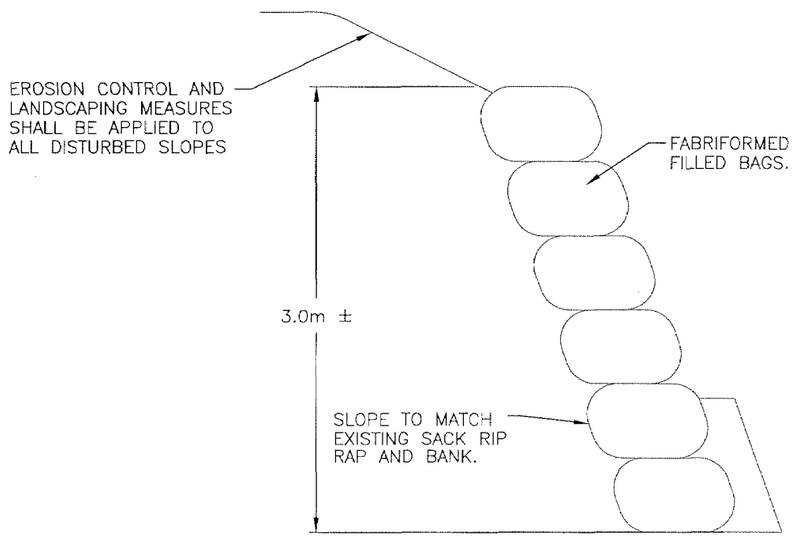

SIDE VIEW

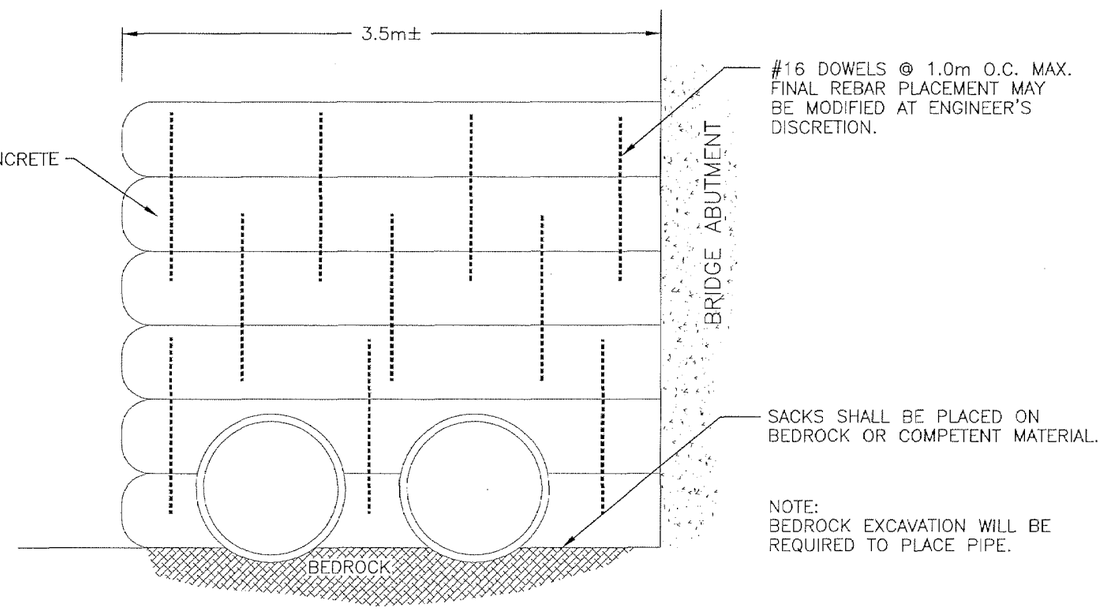

FRONT VIEW

REGISTERED PROFESSIONAL ENGINEER
WAYNE A. PETERSON
No. 18598
exp.
CIVIL
STATE OF CALIFORNIA

REVISIONS:

city of san luis OBISPO

PROJECT TITLE: ANDREWS - CONEJO STORM DRAINAGE IMPROVEMENTS

SHEET TITLE: OUTLET STRUCTURE DETAILS

DATE: 7/1/99

DRAWN BY: JAV

CHECKED BY: WAP

FILE NO. / LOCATION: 9704B-7.DWG

SPECIFICATION NO. 99704B

SHEET NO. 7

TOTAL NUMBER OF SHTS: 8

EROSION CONTROL AND LANDSCAPING MEASURES

EROSION CONTROL BLANKET AND SEED MIX SHALL BE APPLIED TO ALL DISTURBED SLOPES. PRIOR TO PLACEMENT OF EROSION CONTROL BLANKET, THE DISTURBED SLOPES SHALL BE SEEDED WITH THE FOLLOWING SEED MIX AND CALIFORNIA BLACKBERRY (***RUBUS URSINUS***)

SEED (PERCENT MINIMUM PURITY AND GERMINATION)	KG per 1000 M2
Blando Brome – Bromus mollis (95%, 85%)	2.5
Zorro Fescue – Festuca megaluro (85%,. 80%)	1.0
Rose Clover – Trifolium hirtum "Hykon" (95%, 90%)	3.5
inoculate with appropriate bacteria	0.5
Californic Poppy – Eschscholzia californica (95%, 75%)	0.5
Succulent Lupine – Lupinus succulentus (95%, 75%)	0.5

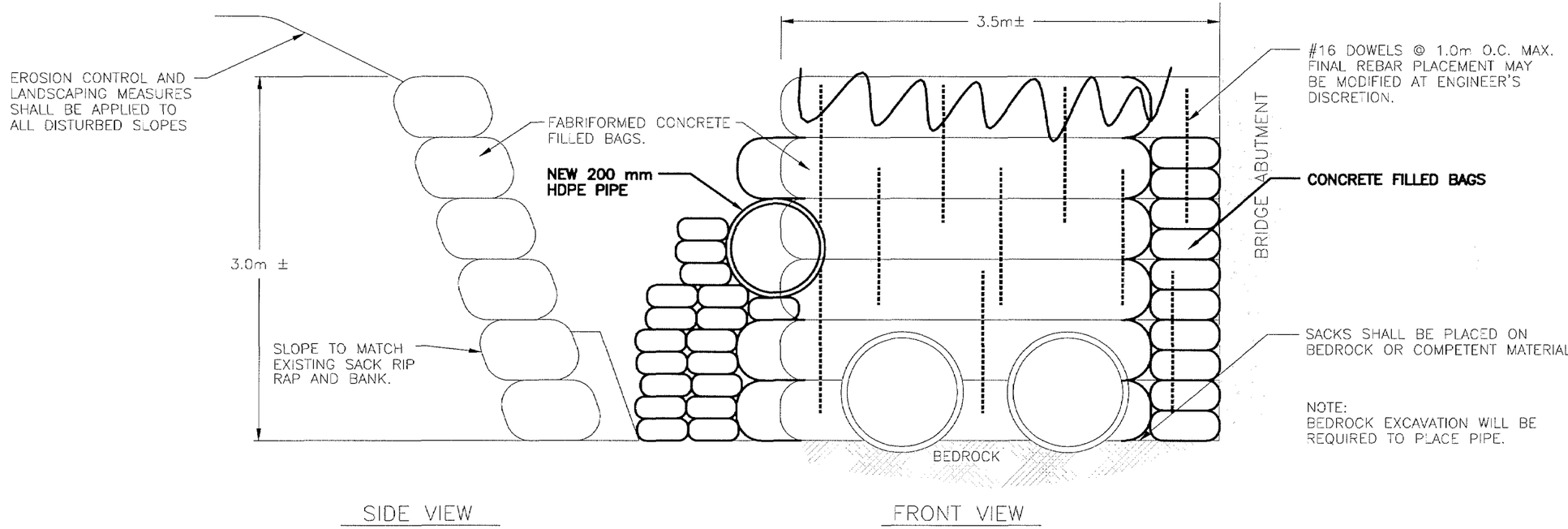

RECORD DRAWING
DATE: 10/23/2000 BY: SR

REGISTERED PROFESSIONAL ENGINEER
WAYNE A. PETERSON
No. 18598
exp.
CIVIL
STATE OF CALIFORNIA

REVISIONS:

city of san luis obispo

PROJECT TITLE: ANDREWS - CONEJO STORM DRAINAGE IMPROVEMENTS

SHEET TITLE: OUTLET STRUCTURE DETAILS

DATE: 7/1/99
DRAWN BY: JAV
CHECKED BY: WAP
FILE NO. / LOCATION: 9704B-7.DWG
SPECIFICATION NO. 99704B
SHEET NO. 7A
TOTAL NUMBER OF SHTS: 8

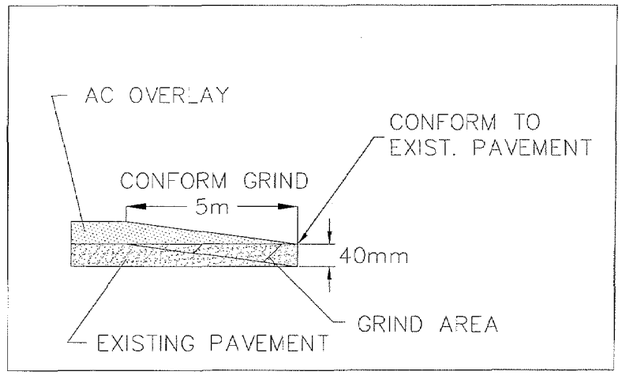

CONFORM DETAIL

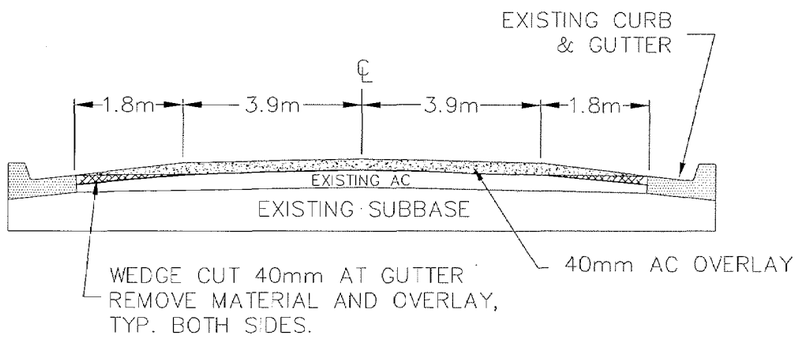

STREET CROSS-SECTION

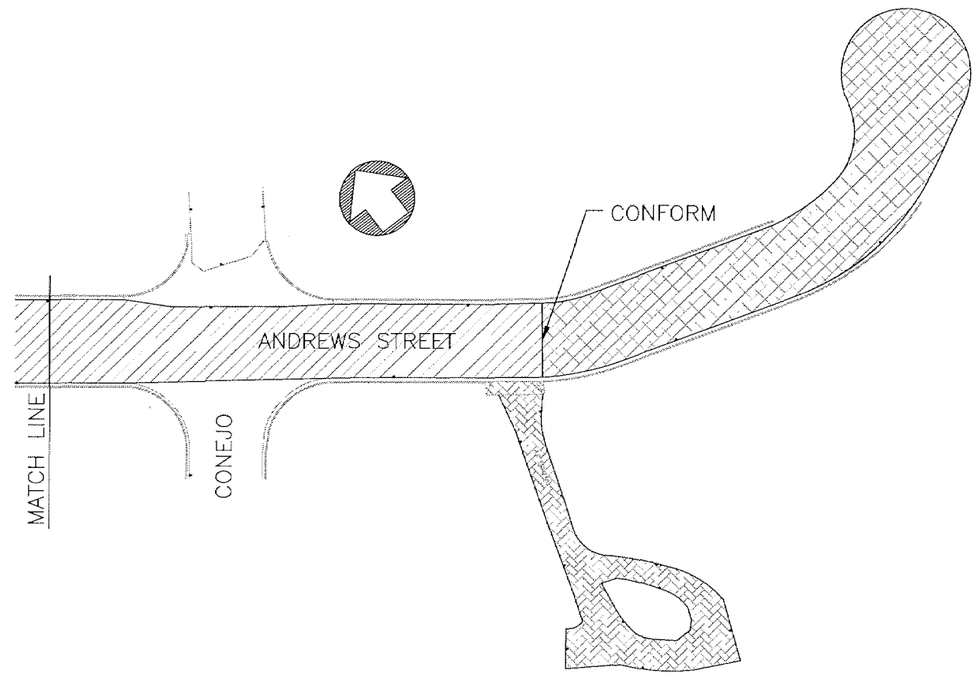

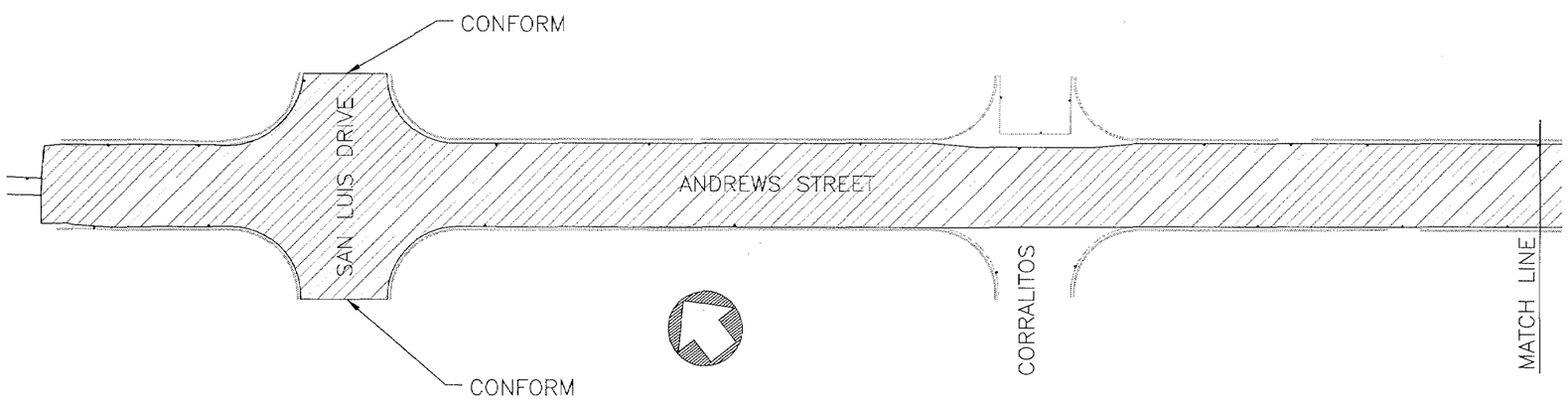

SURFACE OVERLAY

SURFACE SLURRY SEAL

REPAVE DRIVEWAY

0 20
SCALE IN METERS

REGISTERED PROFESSIONAL ENGINEER
WAYNE A. PETERSON
No. 18598
exp.
CIVIL
STATE OF CALIFORNIA

REVISIONS:

city of san luis obispo

PROJECT TITLE: ANDREWS - CONEJO STORM DRAINAGE IMPROVEMENTS

SHEET TITLE: SURFACING PLAN

DATE: 4/19/99

DRAWN BY: JAV

CHECKED BY: WAP

FILE NO. / LOCATION: 9704B-8.DWG

SPECIFICATION NO. 99704B

SHEET NO. 8

TOTAL NUMBER OF SHTS: 8

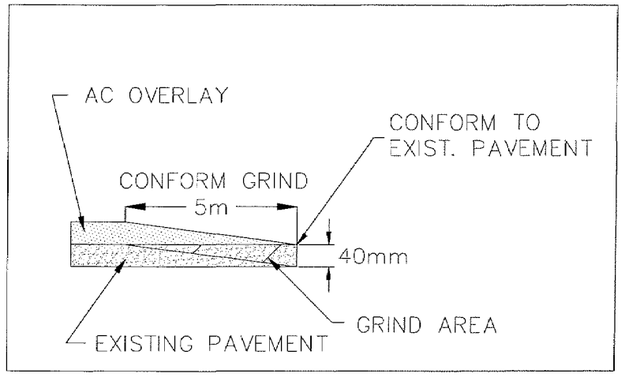

CONFORM DETAIL

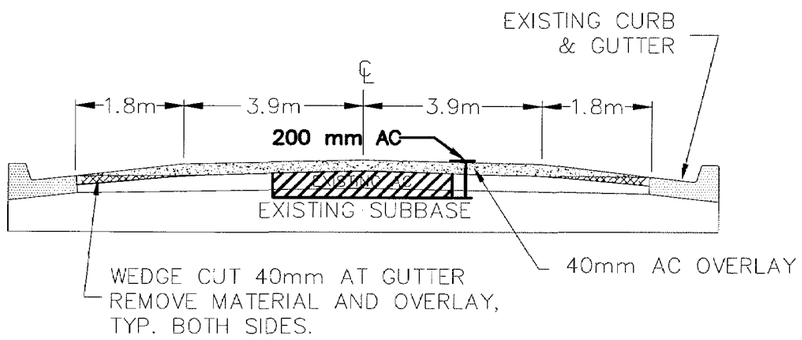

STREET CROSS-SECTION

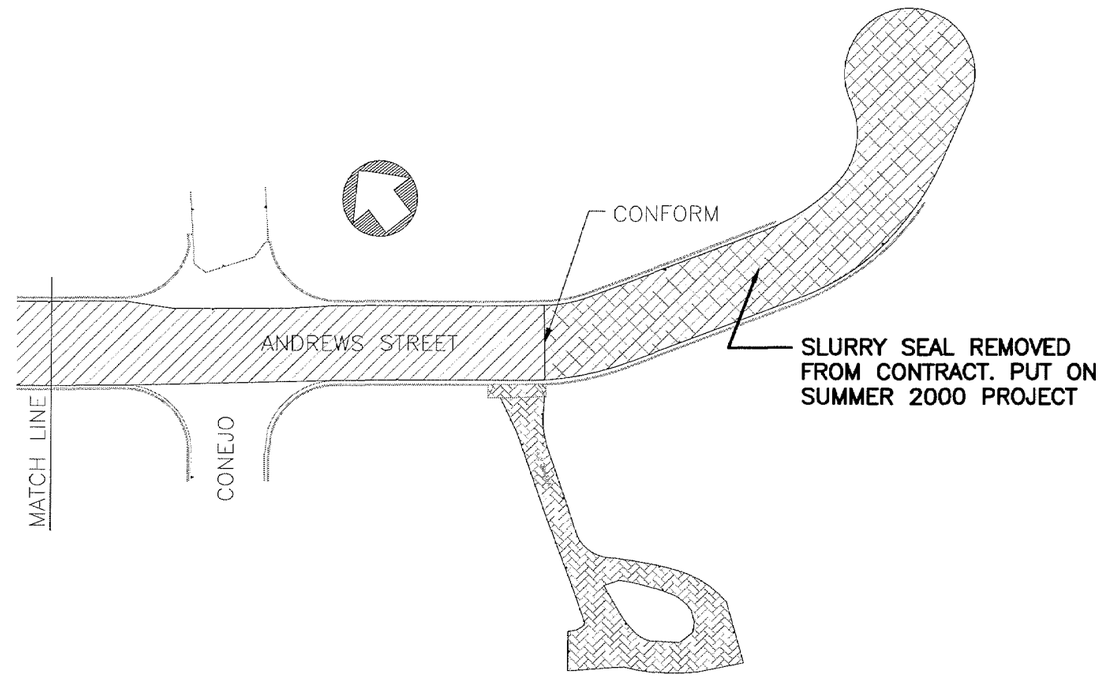

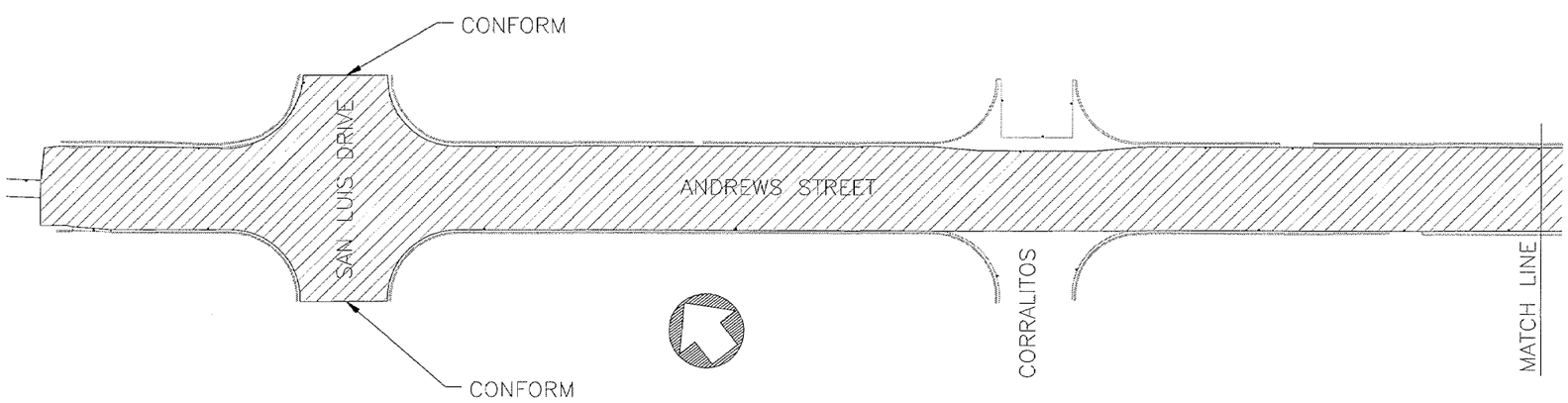

SURFACE OVERLAY

SURFACE SLURRY SEAL

REPAVE DRIVEWAY

RECORD DRAWING
DATE: 10/23/2000 BY: SR

0 20
SCALE IN METERS

REGISTERED PROFESSIONAL ENGINEER
WAYNE A. PETERSON
No. 18598
exp.
CIVIL
STATE OF CALIFORNIA

REVISIONS:

REGISTERED PROFESSIONAL ENGINEER
WAYNE A. PETERSON
No. 18598
exp.
CIVIL
STATE OF CALIFORNIA

city of san luis obispo

PROJECT TITLE:
ANDREWS - CONEJO
STORM DRAINAGE IMPROVEMENTS

SHEET TITLE:
SURFACING PLAN

DATE: 4/19/99
DRAWN BY: JAV
CHECKED BY: WAP
FILE NO. / LOCATION: 97048-8.DWG
SPECIFICATION NO. 99704B
SHEET NO. 8A
TOTAL NUMBER OF SHTS: 8