Villas at Islay Creek

Tract 1750 – Phase 4

SAN LUIS OBISPO, CALIFORNIA

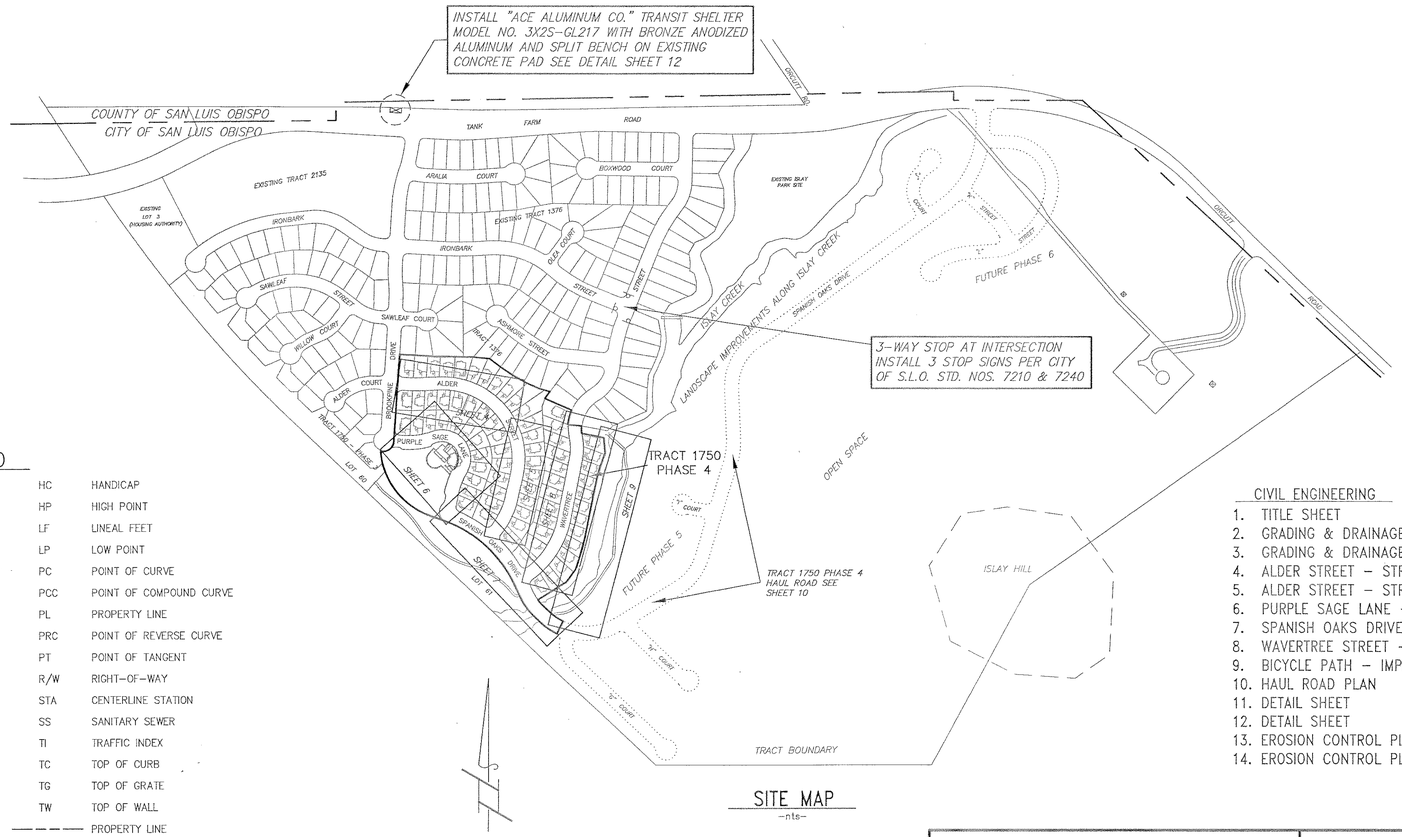

SITE MAP
–nts–

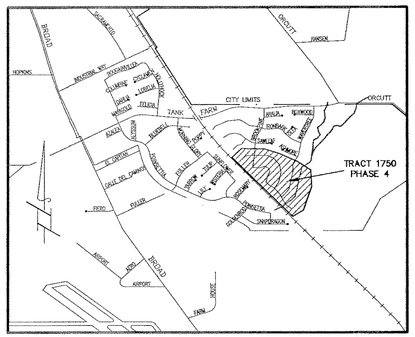

VICINITY MAP
–nts–

LEGEND

BC	BEGIN CURVE	HC	HANDICAP
EC	END CURVE	HP	HIGH POINT
BVC	BEGIN VERTICAL CURVE	LF	LINEAL FEET
EVC	END VERTICAL CURVE	LP	LOW POINT
PRVC	POINT OF REVERSE VERTICLE CURVE	PC	POINT OF CURVE
PVI	POINT OF VERTICAL INTERSECTION	PCC	POINT OF COMPOUND CURVE
BCR	BEGIN CURB RETURN	PL	PROPERTY LINE
ECR	END CURB RETURN	PRC	POINT OF REVERSE CURVE
CL	CENTERLINE	PT	POINT OF TANGENT
DW	DRIVEWAY	R/W	RIGHT–OF–WAY
EP	EDGE OF PAVEMENT	STA	CENTERLINE STATION
EX	EXISTING	SS	SANITARY SEWER
FF	FINISH FLOOR	TI	TRAFFIC INDEX
FG	FINISH GRADE	TC	TOP OF CURB
FL	FLOW LINE	TG	TOP OF GRATE
FS	FINISH SURFACE	TW	TOP OF WALL
GB	GRADE BREAK		PROPERTY LINE
×220.7	EXISTING ELEVATION		DRIVEWAY (WIDTH=17'U.N.O.)
221.4FG	PROPOSED ELEVATION		CONCRETE CURB WITH INTEGRAL SIDEWALK
2%	RATE & DIRECTION OF FLOW		HANDICAP RAMP
220	EXISTING INDEX CONTOUR		AIR RELEASE VALVE
	EXISTING INTERMEDIATE CONTOUR		BLOW–OFF ASSEMBLY
215	PROPOSED INDEX CONTOUR	W	WATER SERVICE (1" POLYETHYLENE, U.N.O.)
	PROPOSED INTERMEDIATE CONTOUR	G	GAS SERVICE
×–×–×	EXISTING FENCE		PG&E TRANSFORMER
FH	FIRE HYDRANT		PG&E BOX (NUMBER DESIGNATES SIZE PER PG&E SPECS)
	STREET LIGHT		PROPOSED STREET TREE LOCATION (NUMBER DESIGNATES TYPE OF TREE)
	EXISTING SEWER MANHOLE		1. CINNAMOMUM CAMPHORA – CAMPHOR TREE
	PROPOSED SEWER MANHOLE		2. PISTACIA CHINENSIS – CHINESE PISTACHE
	PROPOSED CENTERLINE MONUMENT		3. PINOS CANARIENSIS – CANARY ISLAND PINE
	IPE		4. LIQUIDAMBER STYACIFLUA – SWEET GUM
	STREET SIGN	W/S	WATER SERVICE WITH MANIFOLD (2" POLYETHYLENE, U.N.O.)

SHEET INDEX

CIVIL ENGINEERING

1. TITLE SHEET
2. GRADING & DRAINAGE PLAN
3. GRADING & DRAINAGE PLAN
4. ALDER STREET – STREET IMPROVEMENT PLAN
5. ALDER STREET – STREET IMPROVEMENT PLAN
6. PURPLE SAGE LANE – STREET IMPROVEMENT PLAN
7. SPANISH OAKS DRIVE – STREET IMPROVEMENT PLAN
8. WAVERTREE STREET – STREET IMPROVEMENT PLAN
9. BICYCLE PATH – IMPROVEMENT PLAN
10. HAUL ROAD PLAN
11. DETAIL SHEET
12. DETAIL SHEET
13. EROSION CONTROL PLAN
14. EROSION CONTROL PLAN

LANDSCAPE ARCHITECTURE

L–1 PLANTING PLAN – CREEK PHASE 5
L–2 PLANTING PLAN – CREEK PHASE 5
L–3 PLANTING PLAN – CREEK PHASE 5
L–4 PLANTING PLAN – CREEK PHASE 5
L–5 PLANTING PLAN – CREEK PHASE 5
L–6 IRRIGATION PLAN – CREEK PHASE 5
L–7 IRRIGATION PLAN – CREEK PHASE 5
L–8 IRRIGATION PLAN – CREEK PHASE 5
L–9 IRRIGATION PLAN – CREEK PHASE 5
L–10 IRRIGATION PLAN – CREEK PHASE 5
L–11 LANDSCAPE DETAILS – CREEK PHASE 5

R R M D E S I G N G R O U P
RECORD DRAWINGS
VILLAS AT ISLAY CREEK
TRACT 1750 PHASE IV
PLANS PREPARED UNDER THE SUPERVISION OF
(Limited by Business & Professions Code 6735.6(b))
Gerald L. Michael 7/6/00
GERALD L. MICHAEL R.C.E. 36895 DATE

R R M D E S I G N G R O U P
Architecture · Planning · Engineering · Surveying · Interiors · Landscape Architecture
3026 South Higuera Street, San Luis Obispo, California 93401 805/543–1794
1012 – 11th Street, Modesto, California 95354 209/544–1794
Vic Montgomery, Architect C011690 · Jerry Michael, RCE 36895, LS 6270 · Jeff Farber, Landscape Architect 2844

PUBLIC IMPROVEMENT PLANS FOR:

Villas at Islay Creek

TRACT 1750, PHASE 4

TITLE SHEET

	DATE
PG&E	8-27-96
SO. CAL GAS	8-28-96
PACIFIC BELL	8-13-96
CATV	8-3-96

ENGINEER OF RECORD: REGISTERED PROFESSIONAL ENGINEER GERALD L. MICHAEL No. 36895 exp. 6/30/00 CIVIL STATE OF CALIFORNIA
DATE: 9/5/96

DATE		REVISIONS DESCRIPTION	APPROVAL DESIGN ENGR.	APPROVAL CITY
6/00	1	AS-BUILT REVISIONS		

DRAWN BY:	CHECKED BY:	JOB NO.
MAP	TJW	E96806

CITY ENGINEER APPROVAL: REGISTERED PROFESSIONAL ENGINEER JAMES A. PETERSON No. 18598 exp. 6/30/97 CIVIL STATE OF CALIFORNIA
DATE: 11-6-96

city of san luis obispo

NOTICE

APPROVAL BY THE CITY DOES NOT GUARANTEE ACCURACY NOR COMPLETENESS OF THESE PLANS. IT DOES AUTHORIZE THE OWNER TO BUILD THE PROJECT HEREON. IT SHALL BE THE RESPONSIBILITY OF THE OWNER AND ENGINEER OF RECORD TO CORRECT ANY DEFICIENCIES THAT APPEAR DURING OR AFTER CONSTRUCTION. CITY SPECIFICATIONS AND ENGINEERING STANDARDS SHALL BE FOLLOWED UNLESS THEY ARE SPECIFICALLY WAIVED OR MODIFIED BY NOTES ON PLANS. THE ENGINEER OF RECORD SHALL PROVIDE REPRODUCIBLE "AS–BUILT" PLANS AND 3 FULL SETS OF MICROFICHE PLANS TO THE CITY PRIOR TO PROJECT BEING ACCEPTED BY THE CITY.

	DATE
COMM. DEV. DIRECTOR:	11/4/96
CITY UTILITIES ENGINEER:	11/1/96
	DATE
	DATE

FILE/LOCATION	SHEET
	1 OF 14

CONSTRUCTION CONTRACTOR AGREES THAT IN ACCORDANCE WITH GENERALLY ACCEPTED CONSTRUCTION PRACTICES, CONSTRUCTION CONTRACTOR WILL BE REQUIRED TO ASSUME SOLE AND COMPLETE RESPONSIBILITY FOR JOB SITE CONDITIONS DURING THE COURSE OF CONSTRUCTION OF THE PROJECT, INCLUDING SAFETY OF ALL PERSONS AND PROPERTY; THAT THIS REQUIREMENT SHALL BE MADE TO APPLY CONTINUOUSLY AND NOT BE LIMITED TO NORMAL WORKING HOURS, AND CONSTRUCTION CONTRACTOR FURTHER AGREES TO DEFEND, INDEMNIFY AND HOLD DESIGN PROFESSIONAL HARMLESS FROM ANY AND ALL LIABILITY, REAL OR ALLEGED IN CONNECTION WITH THE PERFORMANCE OF WORK ON THIS PROJECT, EXCEPTING LIABILITY ARISING FROM THE SOLE NEGLIGENCE OF DESIGN PROFESSIONAL.

UNAUTHORIZED CHANGES & USES: THE ENGINEER PREPARING THESE PLANS WILL NOT BE RESPONSIBLE FOR, OR LIABLE FOR, UNAUTHORIZED CHANGES TO OR USES OF THESE PLANS. ALL CHANGES TO THE PLANS MUST BE IN WRITING AND MUST BE APPROVED BY THE PREPARER OF THESE PLANS.

(IN FEET)
1 inch = 40 ft.

GENERAL NOTES:

1.) ALL CONSTRUCTION WORK AND INSTALLATIONS SHALL CONFORM TO THE LATEST VERSION OF THE CITY OF SAN LUIS OBISPO STANDARDS AND SPECIFICATIONS.

2.) ALL WORK IS TO BE INSPECTED BY THE CITY OF SAN LUIS OBISPO PUBLIC WORKS INSPECTOR, INCLUDING LANDSCAPING ETC. COORDINATE WITH PUBLIC WORKS INSPECTOR. ONLY INSPECTED WORK WILL BE ACCEPTED BY THE CITY.

3.) IT SHALL BE THE RESPONSIBILITY OF THE CONTRACTOR OR PERMITTEE TO CONTACT "UNDERGROUND SERVICE ALERT" AT 1(800)642-2444, A TOLL FREE TELEPHONE NUMBER, FOR LOCATION OF POWER, TELEPHONE, OIL AND NATURAL GAS FACILITIES AND HE SHALL ALSO CONTACT THE APPROPRIATE AGENCY FOR THE LOCATION OF CABLE TV, WATER, SEWER, DRAINAGE OR OTHER UNDERGROUND FACILITIES.

4.) ALL WORK SHALL BE DONE IN ACCORDANCE WITH THE SOILS ENGINEERING REPORT PREPARED BY:

TERRATECH – JOB No: L0496/6, DATED APRIL 1996
141 SUBURBAN ROAD, SUITE D1
SAN LUIS OBISPO, CA. 93401

TERRATECH – JOB No: LT-49, DATED JUNE 17, 1996
141 SUBURBAN ROAD, SUITE D1
SAN LUIS OBISPO, CA. 93401

5.) BENCHMARK: CITY OF SAN LUIS OBISPO BENCHMARK No. 7–397 L & T AT THE B.C.R. OF THE S.W.C. OF TANK FARM ROAD AND BROOKPINE STREET. ELEVATION: 255.54

6.) IN THE EVENT THAT GRADING OR OTHER OPERATIONS DO UNCOVER BURIED ARTIFACTS, ALL CONSTRUCTION ACTIVITIES SHALL BE HALTED TO PREVENT FURTHER DISRUPTION OF THE NEWLY DISCOVERED ARCHAEOLOGICAL SITE. A QUALIFIED ARCHAEOLOGIST SHOULD THEN EVALUATE THE DISCOVERY AND RECOMMEND THE APPROPRIATE DISPOSITION OF THE RESOURCES. THE COMMUNITY DEVELOPMENT DIRECTOR SHALL BE NOTIFIED. ALL STATE AND FEDERAL LAWS SHALL BE COMPLIED WITH.

7.) EACH CONTRACTOR WILL BE RESPONSIBLE FOR THE PREVENTION OF WIND EROSION AND DUST CONTROL WITHIN HIS AREA OF OPERATION. HE IS TO MAINTAIN A WATER TRUCK ON THE PROJECT AT ALL TIMES.

8.) ALL EXISTING FILLS SHALL BE APPROVED BY THE SOILS ENGINEER OR REMOVED BEFORE ANY ADDITIONAL FILLS ARE ADDED.

9.) ALL FILLS SHALL BE BENCHED INTO COMPETENT MATERIALS.

10.) EROSION CONTROL: CONCENTRATION OF RUN–OFF BY CONCRETE CURBS OR PAVEMENT CAN LEAD TO EXTENSIVE EROSION DAMAGE, PARTICULARLY AT CURBS AND GUTTERS. THE CONTRACTOR IS RESPONSIBLE FOR DISPENSING SUCH RUN–OFF THROUGH THE USE OF DIKES OR BY OTHER MEANS.

11.) THERE SHALL BE NO CONCENTRATED DRAINAGE OVER SIDEWALKS OR DRIVEWAY RAMPS. 3" CAST IRON PIPES SHALL BE INSTALLED UNDER THE SIDEWALK AND THROUGH THE CURB.

12.) NO CUT OR FILL SHALL EXCEED A 2:1 SLOPE.

13.) ALL DISTURBED SURFACES SLOPED 4:1 AND GREATER SHALL BE PREPARED AND MAINTAINED TO CONTROL EROSION BY HYDROSEEDING AND EFFECTIVE PLANTING TO BE COMPLETED NO LATER THAN 30 DAYS PRIOR TO REQUEST FOR FINAL APPROVAL. HYDROSEED MIX SPECIFICATIONS ARE AS FOLLOWS:

HYDRO–MULCH PER ACRE:
ANNUAL RYE – 40% (20 LBS.)
BLANDO BROME – 35% (17.5 LBS.)
ORIMSON OR ROSE CLOVER W/NITROGEN INOCULANTS – 15% (7.5 LBS.)
CALIFORNIA NATIVE WILDFLOWERS – 10% (5 LBS.)
BINDER (AZ–TAC OR EQUAL) – 100 LBS.
FERTILIZER (14–4–7) – 320 LBS.
FIBER MULCH – 2000 LBS.
SLOPES 4:1 OR GREATER SHALL BE OVER SEEDED WITH 50 lbs./ACRE ANNUAL RYE GRASS.

14.) EXCESS MATERIAL SHALL BE DISPOSED OF OUTSIDE THE CITY LIMITS IN AN ACCEPTABLE LOCATION.

15.) ESTIMATED EARTHWORK QUANTITIES:

A. CUT 22,100 CU.YDS.

B. FILL 23,500 CU.YDS.

C. QUANTITY ESTIMATES SHOWN ON THIS PLAN ARE TO BE USED FOR BONDING AND PERMIT PURPOSES ONLY. IT IS THE RESPONSIBILITY OF THE CONTRACTOR TO VERIFY ACTUAL QUANTITIES FOR THE PURPOSES OF CONSTRUCTION.

16.) A CITY ENCROACHMENT PERMIT IS REQUIRED FOR ALL WORK PERFORMED WITHIN THE CITY RIGHT–OF–WAY.

17.) THE CONTRACTOR SHALL PROVIDE A MINIMUM TWO PERCENT GRADIENT FROM BUILDING PADS TOWARDS APPROVED DRAINAGE FACILITIES.

18.) THE CONTRACTOR SHALL PROVIDE A MINIMUM TWO PERCENT DRAINAGE FOR A MINIMUM OF THREE FEET AWAY FROM THE BUILDING FOUNDATION.

19.) A HEADER BOARD, WALL, BERM, OR TWO FOOT WIDE LEVEL AREA SHALL BE PROVIDED BY THE CONTRACTOR BETWEEN THE BACK OF THE CITY SIDEWALK AND THE PLANTING AREA TO PREVENT SOIL FROM WASHING ONTO THE SIDEWALK.

20.) A COMPACTION REPORT SHALL BE PROVIDED BY A LICENSED SOILS ENGINEER STATING THAT THE BASE AND SUBGRADE WERE PREPARED IN ACCORDANCE WITH THE PROJECT SOILS REPORT OR THE CITY OF S.L.O. STD. DWG. No. 7110. 95% MINIMUM COMPACTION.

R R M D E S I G N G R O U P
RECORD DRAWINGS
VILLAS AT ISLAY CREEK
TRACT 1750 PHASE IV
PLANS PREPARED UNDER THE SUPERVISION OF
(Limited by Business & Professions Code 6735.6(b))

Gerald L Michael 7/6/00
GERALD L. MICHAEL R.C.E. 36895 DATE

SEE SHEET 3 FOR GRADING AND DRAINAGE DETAILS

This Plan has been reviewed by Ron Church, GE and appears to be in General conformance with the recommendations of the Soils Report L0496/6 prepared by Terratech Inc., Dated April 1996. We make no representation as to the accuracy of dimensions, measurements, calculations or any portion of the design.

SOILS ENGINEER R Church DATE 9/5/96

REGISTERED PROFESSIONAL ENGINEER RONALD C. CHURCH No. 2164 CIVIL STATE OF CALIFORNIA

RRM DESIGN GROUP
Architecture • Planning • Engineering • Surveying • Interiors • Landscape Architecture
3008 Scala Ilgnere Street, San Luis Obispo, California 93401 805/543-7794
1982 – 11th Street, Modesto, California 95354 209/544-1794
Wm Montgomery, Architect C08199 • Jerry Michael, RCE 36895 LS 6278 • Art Perrier, Landscape Architect 3861

PUBLIC IMPROVEMENT PLANS FOR:

Villas at Islay Creek
TRACT 1750, PHASE 4

GRADING & DRAINAGE PLAN

ENGINEER OF RECORD: REGISTERED PROFESSIONAL ENGINEER GERALD L. MICHAEL No. 36895 Exp. 6/30/00 CIVIL STATE OF CALIFORNIA
DATE: 9/5/96

DATE	REVISIONS DESCRIPTION	APPROVAL DESIGN ENGR.	APPROVAL CITY
6/00 (1)	AS-BUILT REVISIONS		

DRAWN BY: MAP | CHECKED BY: TJW | JOB NO. E96806 | SHEET 2 OF 14

CONSTRUCTION CONTRACTOR AGREES THAT IN ACCORDANCE WITH GENERALLY ACCEPTED CONSTRUCTION PRACTICES, CONSTRUCTION CONTRACTOR WILL BE REQUIRED TO ASSUME SOLE AND COMPLETE RESPONSIBILITY FOR JOB SITE CONDITIONS DURING THE COURSE OF CONSTRUCTION OF THE PROJECT, INCLUDING SAFETY OF ALL PERSONS AND PROPERTY; THAT THIS REQUIREMENT SHALL BE MADE TO APPLY CONTINUOUSLY AND NOT BE LIMITED TO NORMAL WORKING HOURS, AND CONSTRUCTION CONTRACTOR FURTHER AGREES TO DEFEND, INDEMNIFY AND HOLD DESIGN PROFESSIONAL HARMLESS FROM ANY AND ALL LIABILITY, REAL OR ALLEGED IN CONNECTION WITH THE PERFORMANCE OF WORK ON THIS PROJECT, EXCEPTING LIABILITY ARISING FROM THE SOLE NEGLIGENCE OF DESIGN PROFESSIONAL.

UNAUTHORIZED CHANGES & USES: THE ENGINEER PREPARING THESE PLANS WILL NOT BE RESPONSIBLE FOR, OR LIABLE FOR, UNAUTHORIZED CHANGES TO OR USES OF THESE PLANS. ALL CHANGES TO THE PLANS MUST BE IN WRITING AND MUST BE APPROVED BY THE PREPARER OF THESE PLANS.

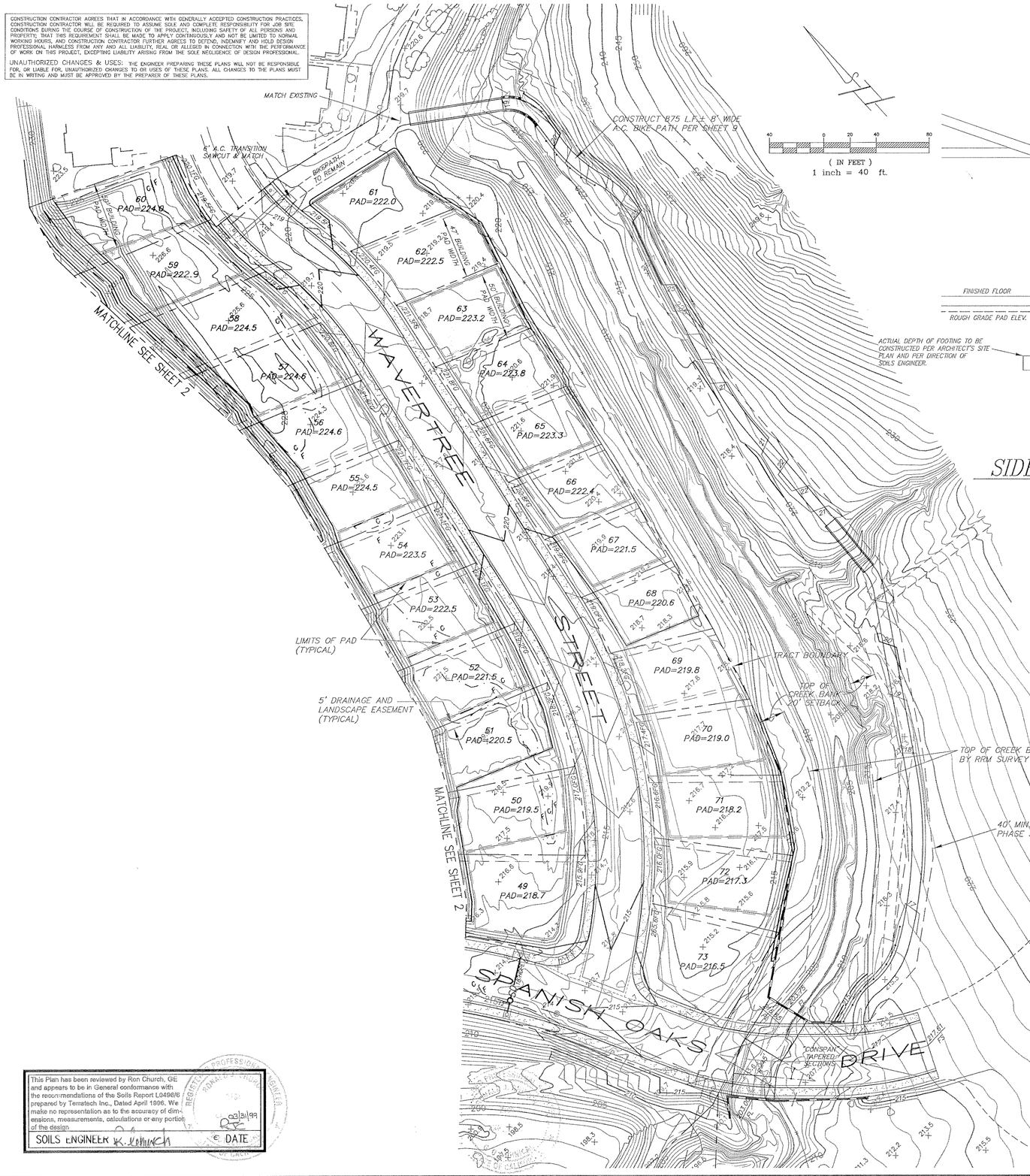

(IN FEET)
1 inch = 40 ft.

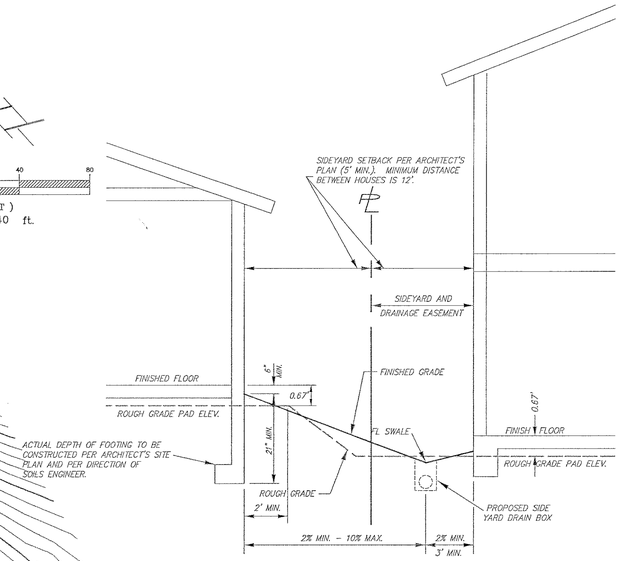

SIDE YARD CROSS SECTION
-nts-

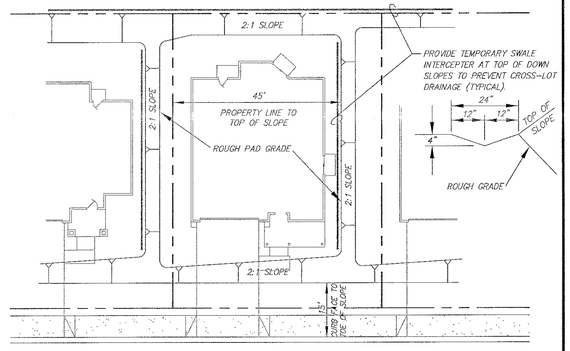

TYPICAL ROUGH LOT GRADING
-nts-

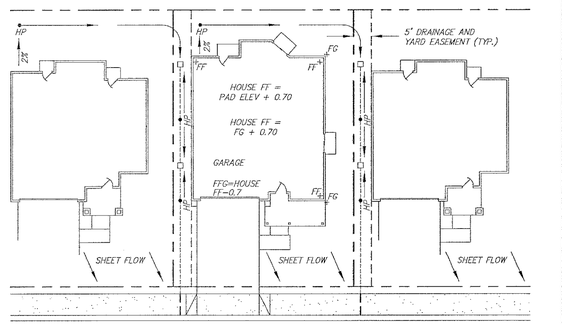

LEGEND

- ——→ INDICATES SURFACE SWALE AT 1% MINIMUM.
- □——— INDICATES YARD INLET (6" SQUARE NDS OR EQUAL)
- ---------- INDICATES BURIED 3" PVC CL 150 AT 0.5% MIN. SLOPE. 6" MIN. COVER AT GRATES.
- — — 3" CAST IRON PIPE UNDERNEATH SIDEWALK AND THROUGH THE CURB FACE.

NOTES:

1. PROVIDE DRAINAGE AWAY FROM THE BUILDINGS AT 2% FOR 3' MINIMUM, AND SLOPE YARDS TO DRAIN AT A MINIMUM OF 1%.
2. THE FOLLOWING GRADES SHALL BE CERTIFIED BY A LICENSED LAND SURVEYOR OR CIVIL ENGINEER PRIOR TO ISSUANCE OF AN OCCUPANCY PERMIT.
   A) SWALE ELEVATIONS AND SLOPES - INCLUDING HIGH POINT
   B) DRAINAGE PIPE FLOWLINE ELEVATIONS AND SLOPES
   C) YARD SLOPES WHEN LESS THAN 2%
3. NO SWALE FLATTER THAN 1.00% SLOPE WILL BE ACCEPTED.
4. TIE IN ROOF DRAINS TO UNDERGROUND STORM DRAIN SYSTEM OR PROVIDE SPLASH BOX WHERE ROOF DRAINS OUTLET TO FINISHED GRADE.

TYPICAL FINISH LOT GRADING
-nts-

SEE SHEET 2 FOR GRADING AND DRAINAGE NOTES

This Plan has been reviewed by Ron Church, GE and appears to be in General conformance with the recommendations of the Soils Report L0496/6 prepared by Terratech Inc., Dated April 1996. We make no representation as to the accuracy of dimensions, measurements, calculations or any portion of the design.

SOILS ENGINEER R. Church DATE 05/21/99

RRM DESIGN GROUP
RECORD DRAWINGS
VILLAS AT ISLAY CREEK
TRACT 1750 PHASE IV
PLANS PREPARED UNDER THE SUPERVISION OF
(Limited by Business & Professions Code 6735.6(b))
GERALD L. MICHAEL R.C.E. 36895 DATE 7/6/00

RRM DESIGN GROUP
Architecture · Planning · Engineering · Surveying · Interiors · Landscape Architecture
3026 South Higuera Street, San Luis Obispo, California 93401 805/543-1794
1012 - 11th Street, Modesto, California 95354 209/544-1794
Yio Montgomery, Architect C011096 · Jerry Mickael, RCE 36895, LS 5246 · Jeff Ferber, Landscape Architect 3864

PUBLIC IMPROVEMENT PLANS FOR:

Villas at Islay Creek
TRACT 1750, PHASE 4
GRADING & DRAINAGE PLAN

ENGINEER OF RECORD: REGISTERED PROFESSIONAL ENGINEER GERALD L. MICHAEL No. 36895 Exp. 6/30/00 CIVIL STATE OF CALIFORNIA

DATE		REVISIONS DESCRIPTION	APPROVAL DESIGN ENGR.	APPROVAL CITY
6/00	1	AS-BUILT REVISIONS		

DATE: 9/5/96 | DRAWN BY: MAP | CHECKED BY: TJW | JOB NO. E96806 | SHEET 3 OF 14

11-6-96

CONSTRUCTION CONTRACTOR AGREES THAT IN ACCORDANCE WITH GENERALLY ACCEPTED CONSTRUCTION PRACTICES, CONSTRUCTION CONTRACTOR WILL BE REQUIRED TO ASSUME SOLE AND COMPLETE RESPONSIBILITY FOR JOB SITE CONDITIONS DURING THE COURSE OF CONSTRUCTION OF THE PROJECT, INCLUDING SAFETY OF ALL PERSONS AND PROPERTY; THAT THIS REQUIREMENT SHALL BE MADE TO APPLY CONTINUOUSLY AND NOT BE LIMITED TO NORMAL WORKING HOURS, AND CONSTRUCTION CONTRACTOR FURTHER AGREES TO DEFEND, INDEMNIFY AND HOLD DESIGN PROFESSIONAL HARMLESS FROM ANY AND ALL LIABILITY, REAL OR ALLEGED IN CONNECTION WITH THE PERFORMANCE OF WORK ON THIS PROJECT, EXCEPTING LIABILITY ARISING FROM THE SOLE NEGLIGENCE OF DESIGN PROFESSIONAL.

UNAUTHORIZED CHANGES & USES: THE ENGINEER PREPARING THESE PLANS WILL NOT BE RESPONSIBLE FOR, OR LIABLE FOR, UNAUTHORIZED CHANGES TO OR USES OF THESE PLANS. ALL CHANGES TO THE PLANS MUST BE IN WRITING AND MUST BE APPROVED BY THE PREPARER OF THESE PLANS.

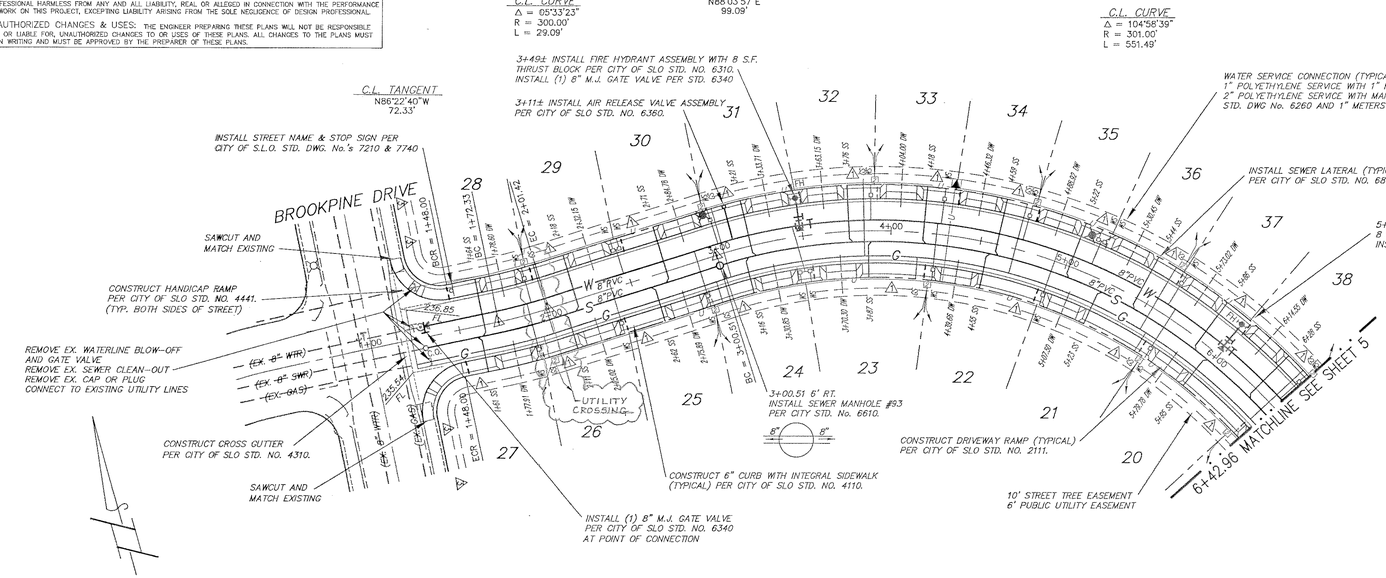

NOTES:

1.) ALL EXISTING OVERHEAD AND BURIED UTILITY LOCATIONS SHALL BE FIELD VERIFIED BY CONTRACTOR PRIOR TO ANY EXCAVATION.

2.) ALL CURB RETURNS SHALL BE 28 FT. RADIUS AT FACE OF CURB UNLESS NOTED OTHERWISE.

3.) STREET TREES TO BE PLANTED A MIN. 8' BEHIND BACK OF SIDEWALK.

4.) UTILITY CONDUITS CROSSING THE STREET SHALL BE A MINIMUM OF THREE FEET CLEAR OF ANY OTHER SERVICE. EXACT LOCATION SHALL BE STATIONED ON "AS-BUILTS".

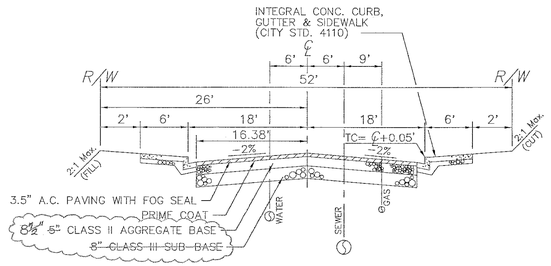

NOTES:
- FINAL DETERMINATION OF THICKNESSES SHALL BE BASED UPON "R" VALUE FIELD TESTED ON ACTUAL SUBGRADE.
- PER CITY OF S.L.O. STD. No. 7110 CONSTRUCTION OF STREET SHALL BE UNPHASED.

TI = 5.5

TYPICAL SECTION–ALDER STREET

NO SCALE

ALDER STREET

SEE TYPICAL SECTION THIS SHEET

R R M D E S I G N G R O U P
RECORD DRAWINGS
VILLAS AT ISLAY CREEK
TRACT 1750 PHASE IV
PLANS PREPARED UNDER THE SUPERVISION OF
(Limited by Business & Professions Code 6735.6(b))

7/6/00
GERALD L. MICHAEL R.C.E. 36895 DATE

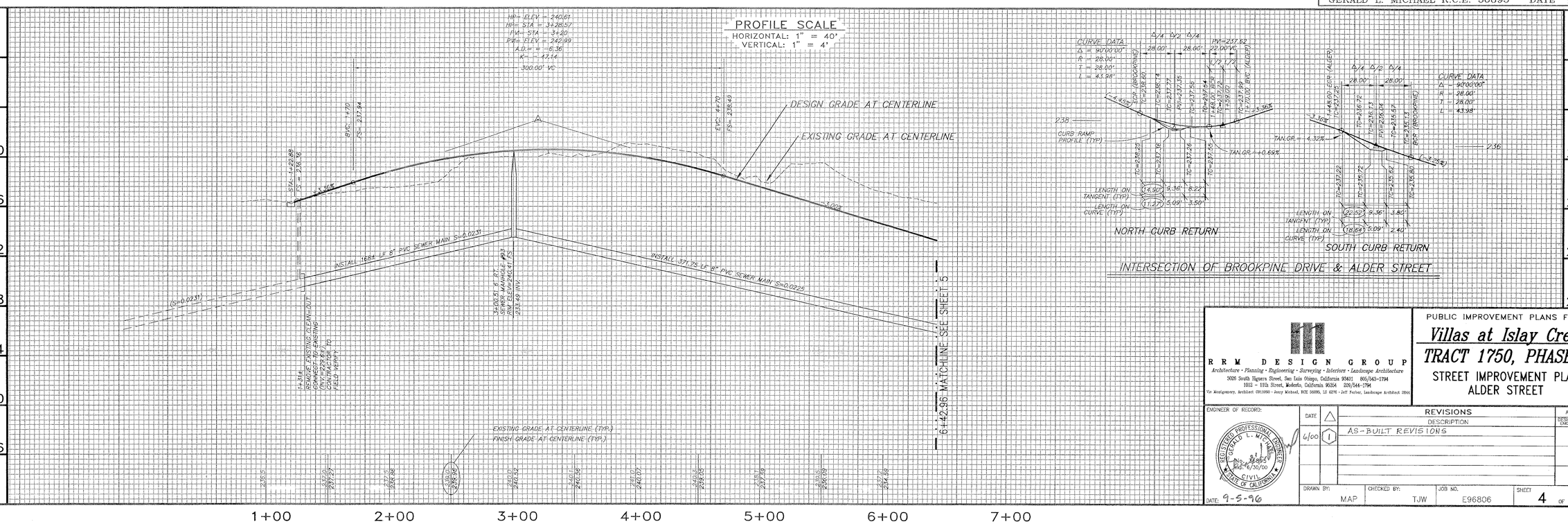

R R M D E S I G N G R O U P
Architecture · Planning · Engineering · Surveying · Interiors · Landscape Architecture
3005 South Higuera Street, San Luis Obispo, California 93401 805/543-1794
1012 – 11th Street, Modesto, California 95354 209/544-1794
Tim Montgomery, Architect C011090 · Jerry Nichael, RCE 36895, LS 6274 · Jeff Farber, Landscape Architect 3844

PUBLIC IMPROVEMENT PLANS FOR:
Villas at Islay Creek
TRACT 1750, PHASE 4
STREET IMPROVEMENT PLAN
ALDER STREET

ENGINEER OF RECORD:
REGISTERED PROFESSIONAL ENGINEER GERALD L. MICHAEL No. 36895 Exp. 6/30/00 CIVIL STATE OF CALIFORNIA
DATE: 9-5-96

DATE	△	REVISIONS DESCRIPTION	APPROVAL DESIGN ENGR.	APPROVAL CITY
6/00	1	AS-BUILT REVISIONS		

DRAWN BY: MAP | CHECKED BY: TJW | JOB NO. E96806 | SHEET 4 OF 14

11-6-96

CONSTRUCTION CONTRACTOR AGREES THAT IN ACCORDANCE WITH GENERALLY ACCEPTED CONSTRUCTION PRACTICES, CONSTRUCTION CONTRACTOR WILL BE REQUIRED TO ASSUME SOLE AND COMPLETE RESPONSIBILITY FOR JOB SITE CONDITIONS DURING THE COURSE OF CONSTRUCTION OF THE PROJECT, INCLUDING SAFETY OF ALL PERSONS AND PROPERTY; THAT THIS REQUIREMENT SHALL BE MADE TO APPLY CONTINUOUSLY AND NOT BE LIMITED TO NORMAL WORKING HOURS, AND CONSTRUCTION CONTRACTOR FURTHER AGREES TO DEFEND, INDEMNIFY AND HOLD DESIGN PROFESSIONAL HARMLESS FROM ANY AND ALL LIABILITY, REAL OR ALLEGED IN CONNECTION WITH THE PERFORMANCE OF WORK ON THIS PROJECT, EXCEPTING LIABILITY ARISING FROM THE SOLE NEGLIGENCE OF DESIGN PROFESSIONAL.

UNAUTHORIZED CHANGES & USES: THE ENGINEER PREPARING THESE PLANS WILL NOT BE RESPONSIBLE FOR, OR LIABLE FOR, UNAUTHORIZED CHANGES TO OR USES OF THESE PLANS. ALL CHANGES TO THE PLANS MUST BE IN WRITING AND MUST BE APPROVED BY THE PREPARER OF THESE PLANS.

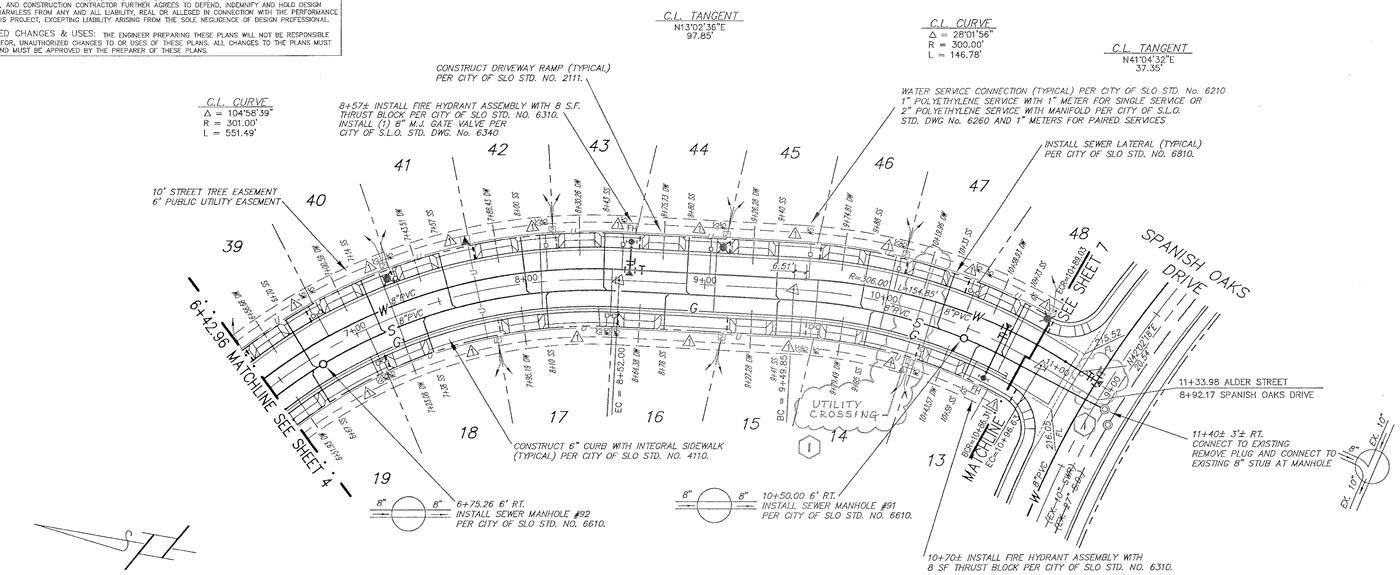

ALDER STREET

SEE TYPICAL SECTION THIS SHEET

NOTES:

1.) ALL EXISTING OVERHEAD AND BURIED UTILITY LOCATIONS SHALL BE FIELD VERIFIED BY CONTRACTOR PRIOR TO ANY EXCAVATION.

2.) ALL CURB RETURNS SHALL BE 28 FT. RADIUS AT FACE OF CURB UNLESS NOTED OTHERWISE.

3.) STREET TREES TO BE PLANTED A MIN. 8' BEHIND BACK OF SIDEWALK.

4.) UTILITY CONDUITS CROSSING THE STREET SHALL BE A MINIMUM OF THREE FEET CLEAR OF ANY OTHER SERVICE. EXACT LOCATION SHALL BE STATIONED ON "AS-BUILTS".

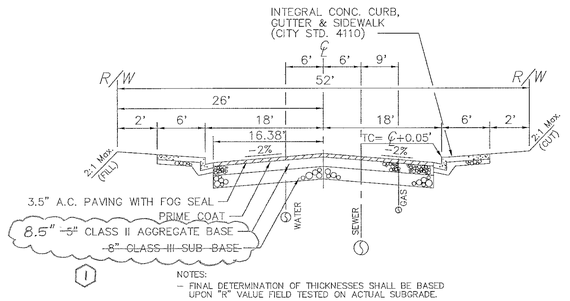

NOTES:
- FINAL DETERMINATION OF THICKNESSES SHALL BE BASED UPON "R" VALUE FIELD TESTED ON ACTUAL SUBGRADE.
- PER CITY OF S.L.O. STD. No. 7110 CONSTRUCTION OF STREET SHALL BE UNPHASED.

TI = 5.5

TYPICAL SECTION—ALDER STREET

NO SCALE

RRM DESIGN GROUP
RECORD DRAWINGS
VILLAS AT ISLAY CREEK
TRACT 1750 PHASE IV
PLANS PREPARED UNDER THE SUPERVISION OF
(Limited by Business & Professions Code 6735.6(b))

GERALD L. MICHAEL R.C.E. 36895 — DATE 7/6/20

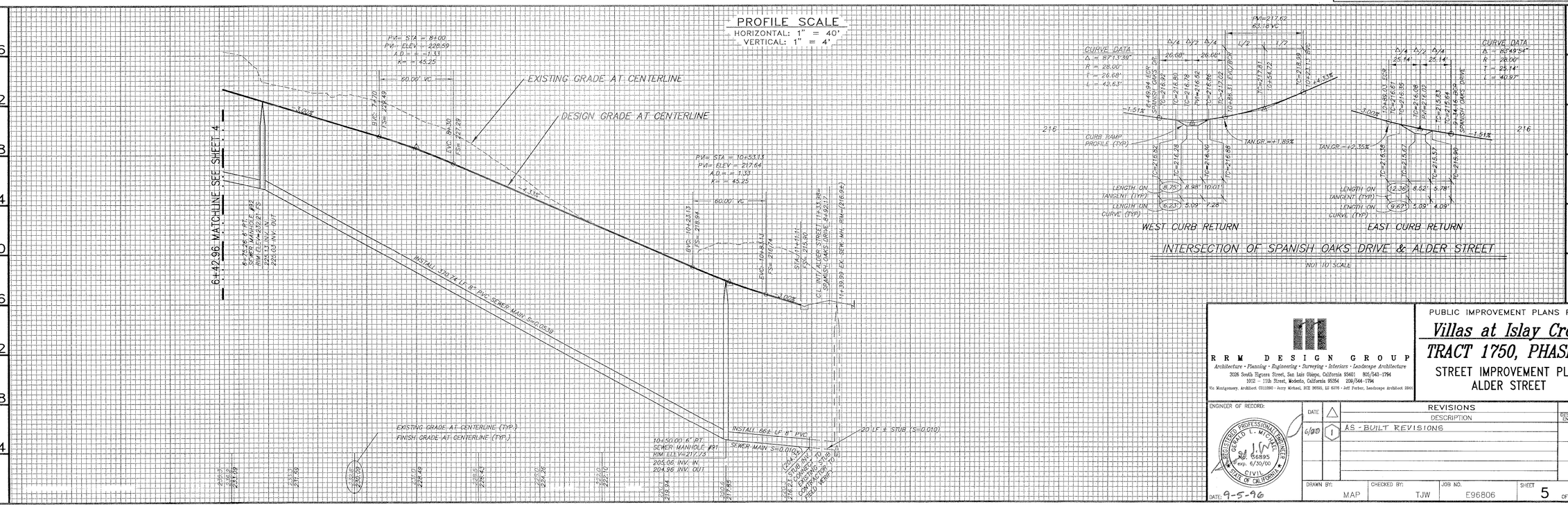

RRM DESIGN GROUP
Architecture · Planning · Engineering · Surveying · Interiors · Landscape Architecture
3026 South Higuera Street, San Luis Obispo, California 93401 805/543-1794
1012 – 11th Street, Modesto, California 95354 209/544-1794
Vic Montgomery, Architect C011090 - Jerry Michael, RCE 36895, LS 6278 - Jeff Farber, Landscape Architect 3845

PUBLIC IMPROVEMENT PLANS FOR:
Villas at Islay Creek
TRACT 1750, PHASE 4
STREET IMPROVEMENT PLAN
ALDER STREET

ENGINEER OF RECORD: REGISTERED PROFESSIONAL ENGINEER GERALD L. MICHAEL No. 36895 exp. 6/30/00 CIVIL STATE OF CALIFORNIA
DATE: 9-5-96

REVISIONS			APPROVAL	
DATE	△	DESCRIPTION	DESIGN ENGR	CITY
6/00	1	AS-BUILT REVISIONS		

DRAWN BY: MAP | CHECKED BY: TJW | JOB NO. E96806 | SHEET 5 OF 14

11-6-96

CONSTRUCTION CONTRACTOR AGREES THAT IN ACCORDANCE WITH GENERALLY ACCEPTED CONSTRUCTION PRACTICES, CONSTRUCTION CONTRACTOR WILL BE REQUIRED TO ASSUME SOLE AND COMPLETE RESPONSIBILITY FOR JOB SITE CONDITIONS DURING THE COURSE OF CONSTRUCTION OF THE PROJECT, INCLUDING SAFETY OF ALL PERSONS AND PROPERTY; THAT THIS REQUIREMENT SHALL BE MADE TO APPLY CONTINUOUSLY AND NOT BE LIMITED TO NORMAL WORKING HOURS, AND CONSTRUCTION CONTRACTOR FURTHER AGREES TO DEFEND, INDEMNIFY AND HOLD DESIGN PROFESSIONAL HARMLESS FROM ANY AND ALL LIABILITY, REAL OR ALLEGED IN CONNECTION WITH THE PERFORMANCE OF WORK ON THIS PROJECT, EXCEPTING LIABILITY ARISING FROM THE SOLE NEGLIGENCE OF DESIGN PROFESSIONAL.

UNAUTHORIZED CHANGES & USES: THE ENGINEER PREPARING THESE PLANS WILL NOT BE RESPONSIBLE FOR, OR LIABLE FOR, UNAUTHORIZED CHANGES TO OR USES OF THESE PLANS. ALL CHANGES TO THE PLANS MUST BE IN WRITING AND MUST BE APPROVED BY THE PREPARER OF THESE PLANS.

CURVE	RADIUS	LENGTH	DELTA
C1	18.00'	16.69'	53°07'48"
C2	2.00'	1.85'	53°07'48"
C3	324.00'	104.58'	18°29'35"
C4	2.00'	1.90'	54°32'27"
C5	18.00'	16.26'	51°44'42"
C6	2.00'	1.90'	54°32'27"
C7	324.00'	85.45'	15°06'42"
C8	2.00'	1.84'	52°37'13"
C9	18.00'	16.68'	53°05'28"

LINE	DIRECTION	DISTANCE
L1	N86°22'40"W	2.93'

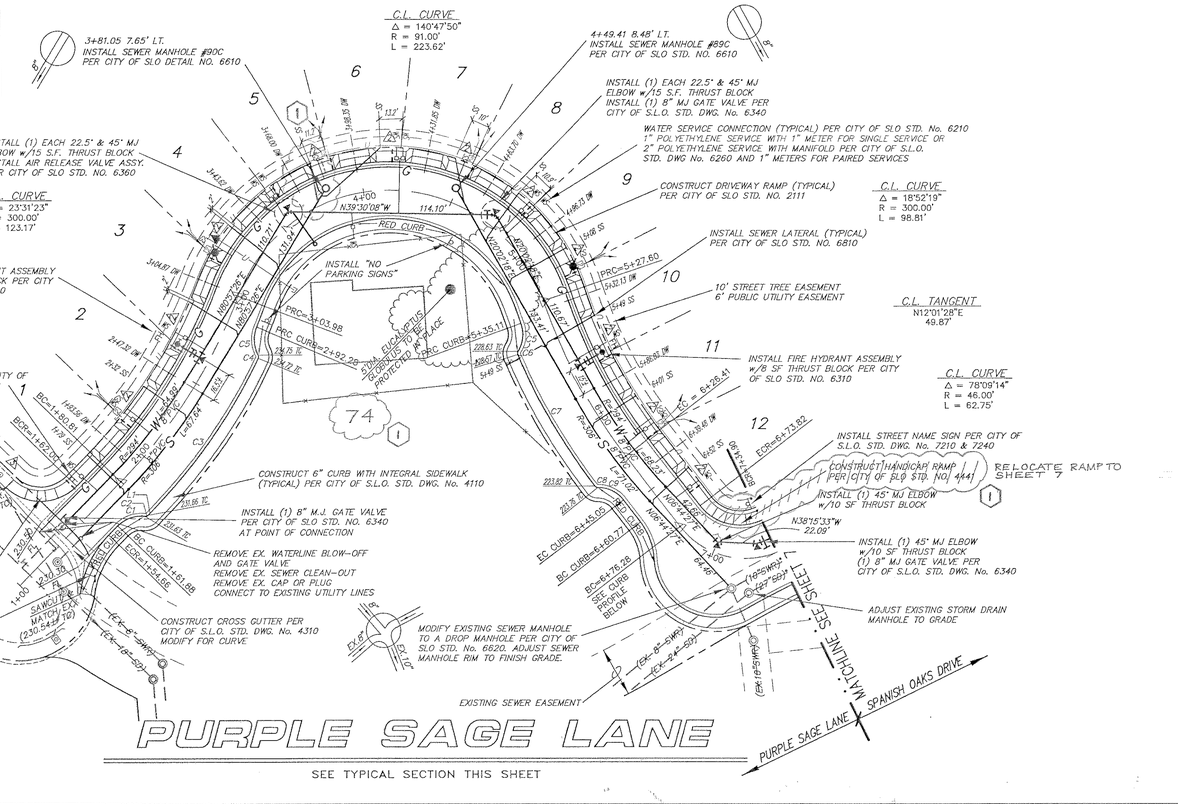

(IN FEET)
1 inch = 40 ft.

NOTES:

1.) ALL EXISTING OVERHEAD AND BURIED UTILITY LOCATIONS SHALL BE FIELD VERIFIED BY CONTRACTOR PRIOR TO ANY EXCAVATION.
2.) ALL CURB RETURNS SHALL BE 28 FT. RADIUS AT FACE OF CURB UNLESS NOTED OTHERWISE.
3.) STREET TREES TO BE PLANTED A MIN. 8' BEHIND BACK OF SIDEWALK.
4.) UTILITY CONDUITS CROSSING THE STREET SHALL BE A MINIMUM OF THREE FEET CLEAR OF ANY OTHER SERVICE. EXACT LOCATION SHALL BE STATIONED ON "AS-BUILTS".

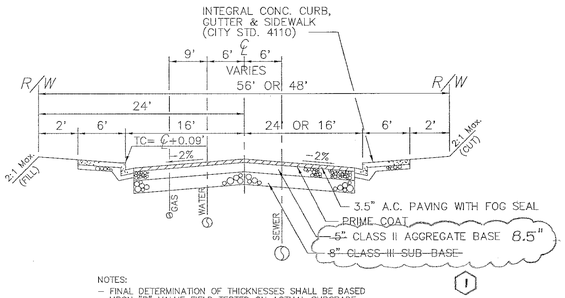

NOTES:
- FINAL DETERMINATION OF THICKNESSES SHALL BE BASED UPON "R" VALUE FIELD TESTED ON ACTUAL SUBGRADE.
- PER CITY OF S.L.O. STD. No. 7110 CONSTRUCTION OF STREET SHALL BE UNPHASED.

TI = 5.5

TYPICAL SECTION—PURPLE SAGE LANE

NO SCALE

R R M D E S I G N G R O U P
RECORD DRAWINGS
VILLAS AT ISLAY CREEK
TRACT 1750 PHASE IV
PLANS PREPARED UNDER THE SUPERVISION OF
(Limited by Business & Professions Code 6735.6(b))
GERALD L. MICHAEL R.C.E. 36895 DATE 7/6/00

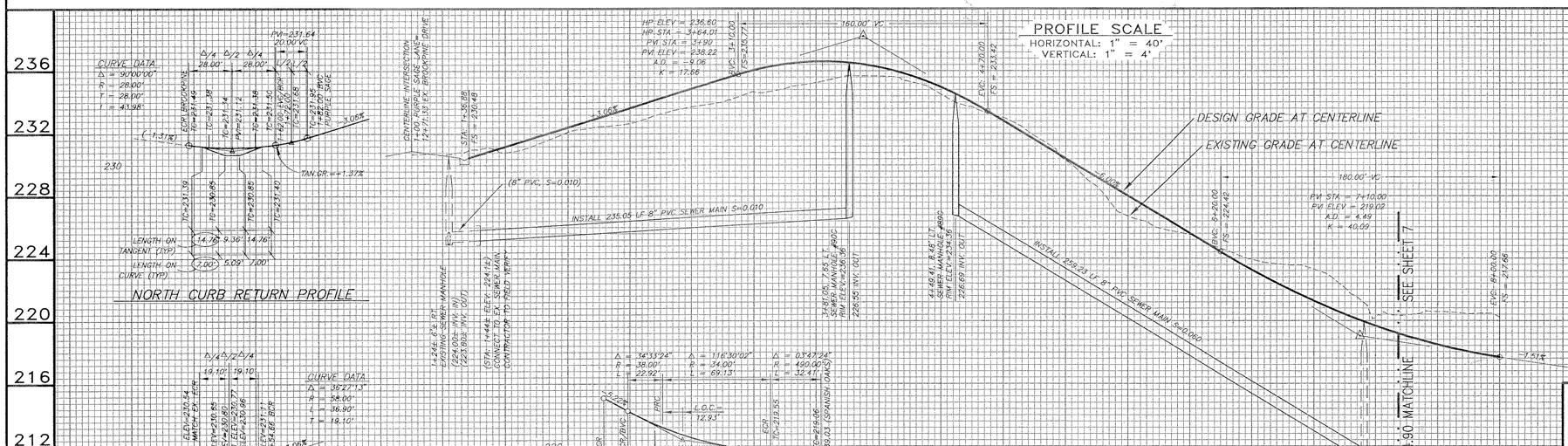

R R M D E S I G N G R O U P
Architecture • Planning • Engineering • Surveying • Interiors • Landscape Architecture
3626 South Higuera Street, San Luis Obispo, California 93401 805/543-1794
1012 - 11th Street, Modesto, California 95354 209/544-1794
Via Montgomery, Architect C011090 - Jerry Michael, RCE 36895, LS 6270 - Art Ferber, Landscape Architect 2944

PUBLIC IMPROVEMENT PLANS FOR:
Villas at Islay Creek
TRACT 1750, PHASE 4
STREET IMPROVEMENT PLAN
PURPLE SAGE LANE

ENGINEER OF RECORD: REGISTERED PROFESSIONAL ENGINEER GERALD L. MICHAEL No. 36895 CIVIL STATE OF CALIFORNIA
DATE: 9-5-96

REVISIONS			APPROVAL	
	DATE	DESCRIPTION	DESIGN ENGR.	CITY
1	6/00	AS-BUILT REVISIONS		

DRAWN BY: MAP | CHECKED BY: TJW | JOB NO. E96806 | SHEET 6 OF 14

11-6-96

CONSTRUCTION CONTRACTOR AGREES THAT IN ACCORDANCE WITH GENERALLY ACCEPTED CONSTRUCTION PRACTICES, CONSTRUCTION CONTRACTOR WILL BE REQUIRED TO ASSUME SOLE AND COMPLETE RESPONSIBILITY FOR JOB SITE CONDITIONS DURING THE COURSE OF CONSTRUCTION OF THE PROJECT, INCLUDING SAFETY OF ALL PERSONS AND PROPERTY; THAT THIS REQUIREMENT SHALL BE MADE TO APPLY CONTINUOUSLY AND NOT BE LIMITED TO NORMAL WORKING HOURS, AND CONSTRUCTION CONTRACTOR FURTHER AGREES TO DEFEND, INDEMNIFY AND HOLD DESIGN PROFESSIONAL HARMLESS FROM ANY AND ALL LIABILITY, REAL OR ALLEGED IN CONNECTION WITH THE PERFORMANCE OF WORK ON THIS PROJECT, EXCEPTING LIABILITY ARISING FROM THE SOLE NEGLIGENCE OF DESIGN PROFESSIONAL.

UNAUTHORIZED CHANGES & USES: THE ENGINEER PREPARING THESE PLANS WILL NOT BE RESPONSIBLE FOR, OR LIABLE FOR, UNAUTHORIZED CHANGES TO OR USES OF THESE PLANS. ALL CHANGES TO THE PLANS MUST BE IN WRITING AND MUST BE APPROVED BY THE PREPARER OF THESE PLANS.

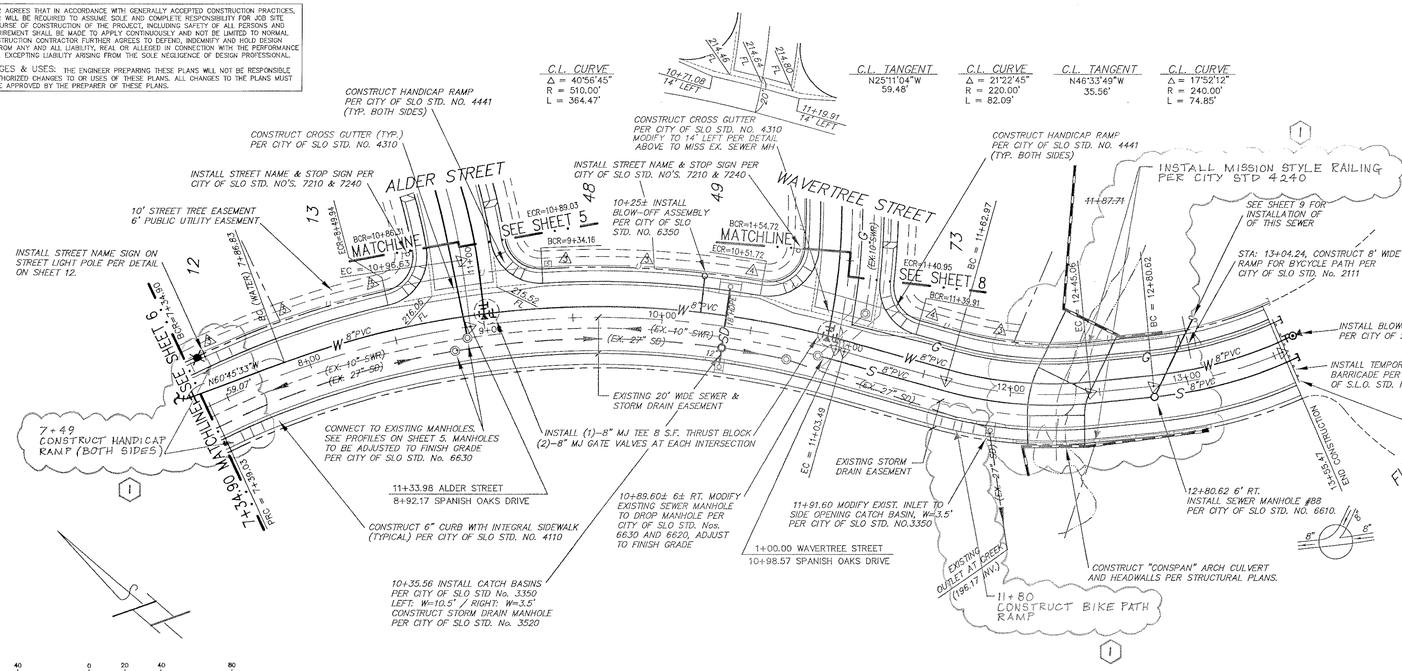

SPANISH OAKS DRIVE

SEE TYPICAL SECTION THIS SHEET

NOTES:

1.) ALL EXISTING OVERHEAD AND BURIED UTILITY LOCATIONS SHALL BE FIELD VERIFIED BY CONTRACTOR PRIOR TO ANY EXCAVATION.

2.) ALL CURB RETURNS SHALL BE 28 FT. RADIUS AT FACE OF CURB UNLESS NOTED OTHERWISE.

3.) STREET TREES TO BE PLANTED A MIN. 8' BEHIND BACK OF SIDEWALK.

4.) UTILITY CONDUITS CROSSING THE STREET SHALL BE A MINIMUM OF THREE FEET CLEAR OF ANY OTHER SERVICE. EXACT LOCATION SHALL BE STATIONED ON "AS-BUILTS".

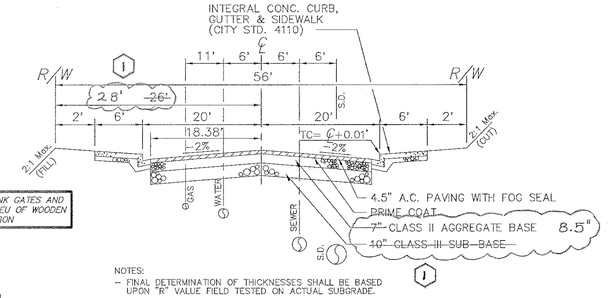

NOTES:
- FINAL DETERMINATION OF THICKNESSES SHALL BE BASED UPON "R" VALUE FIELD TESTED ON ACTUAL SUBGRADE.
- PER CITY OF S.L.O. STD. No. 7110 CONSTRUCTION OF STREET SHALL BE UNPHASED.

TI = 7.0

TYPICAL SECTION--SPANISH OAKS DRIVE

NO SCALE

R R M D E S I G N G R O U P
RECORD DRAWINGS
VILLAS AT ISLAY CREEK
TRACT 1750 PHASE IV
PLANS PREPARED UNDER THE SUPERVISION OF
(Limited by Business & Professions Code 6735.6(b))

GERALD L. MICHAEL R.C.E. 36895 DATE 7/6/00

PROFILE SCALE

HORIZONTAL: 1" = 40'
VERTICAL: 1" = 4'

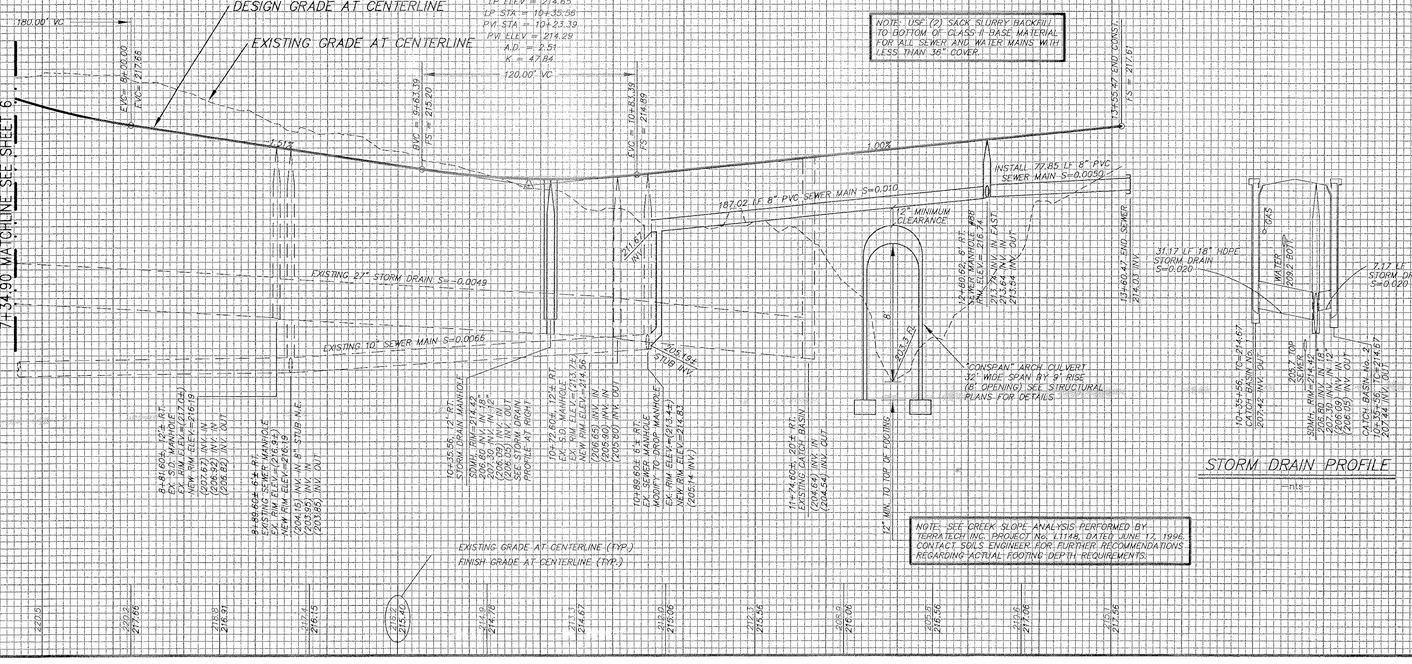

R R M D E S I G N G R O U P
Architecture • Planning • Engineering • Surveying • Interiors • Landscape Architecture
3026 South Higuera Street, San Luis Obispo, California 93401 805/543-1794
1012 - 11th Street, Modesto, California 95354 209/544-1794
Via Montgomery, Architect C011090 - Jerry Michael, RCE 36895, LS 6376 - Jeff Farber, Landscape Architect 2864

PUBLIC IMPROVEMENT PLANS FOR:
Villas at Islay Creek
TRACT 1750, PHASE 4
STREET IMPROVEMENT PLAN
SPANISH OAKS DRIVE

ENGINEER OF RECORD:
REGISTERED PROFESSIONAL ENGINEER GERALD L. MICHAEL No. 36895 Exp. 6/30/00 CIVIL STATE OF CALIFORNIA
DATE: 9-5-96

DATE	△	REVISIONS DESCRIPTION	APPROVAL DESIGNER ENGR	CITY
6/00	1	AS-BUILT REVISIONS		

DRAWN BY: MAP | CHECKED BY: TJW | JOB NO. E96806 | SHEET 7 OF 14

11-6-96

CONSTRUCTION CONTRACTOR AGREES THAT IN ACCORDANCE WITH GENERALLY ACCEPTED CONSTRUCTION PRACTICES, CONSTRUCTION CONTRACTOR WILL BE REQUIRED TO ASSUME SOLE AND COMPLETE RESPONSIBILITY FOR JOB SITE CONDITIONS DURING THE COURSE OF CONSTRUCTION OF THE PROJECT, INCLUDING SAFETY OF ALL PERSONS AND PROPERTY; THAT THIS REQUIREMENT SHALL BE MADE TO APPLY CONTINUOUSLY AND NOT BE LIMITED TO NORMAL WORKING HOURS, AND CONSTRUCTION CONTRACTOR FURTHER AGREES TO DEFEND, INDEMNIFY AND HOLD DESIGN PROFESSIONAL HARMLESS FROM ANY AND ALL LIABILITY, REAL OR ALLEGED IN CONNECTION WITH THE PERFORMANCE OF WORK ON THIS PROJECT, EXCEPTING LIABILITY ARISING FROM THE SOLE NEGLIGENCE OF DESIGN PROFESSIONAL.

UNAUTHORIZED CHANGES & USES: THE ENGINEER PREPARING THESE PLANS WILL NOT BE RESPONSIBLE FOR, OR LIABLE FOR, UNAUTHORIZED CHANGES TO OR USES OF THESE PLANS. ALL CHANGES TO THE PLANS MUST BE IN WRITING AND MUST BE APPROVED BY THE PREPARER OF THESE PLANS.

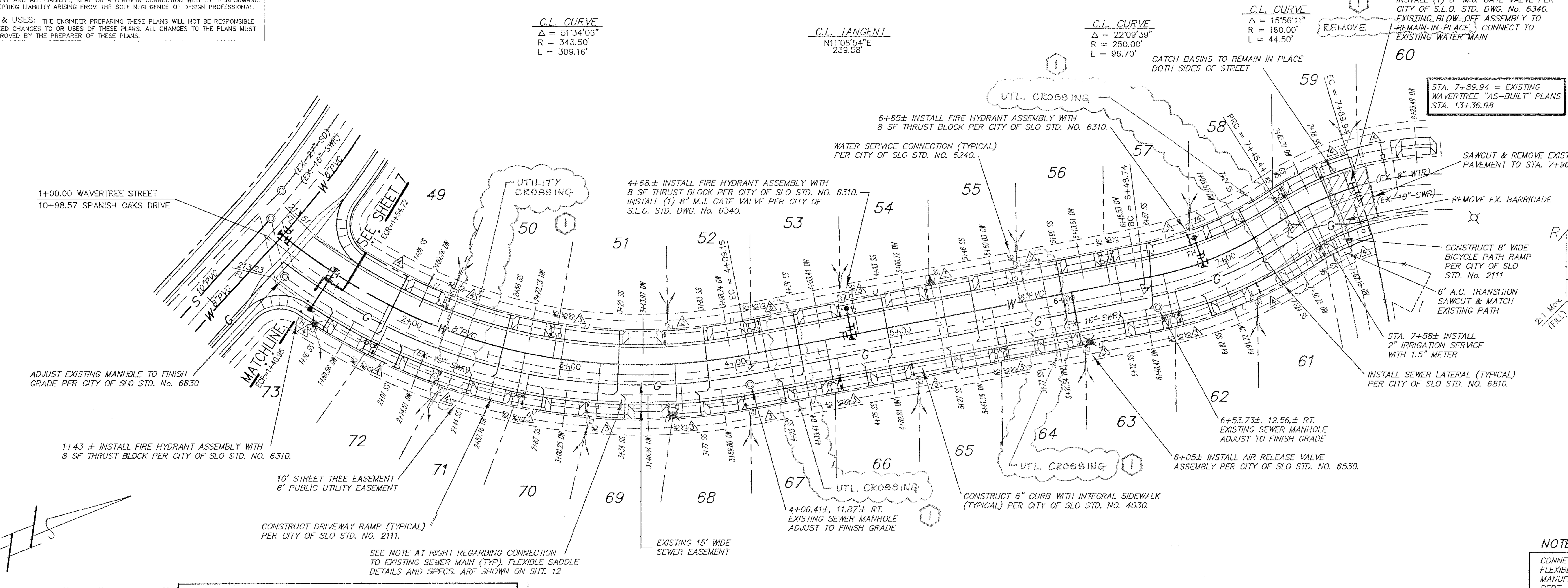

(IN FEET)
1 inch = 40 ft.

RRM DESIGN GROUP
RECORD DRAWINGS
VILLAS AT ISLAY CREEK
TRACT 1750 PHASE IV
PLANS PREPARED UNDER THE SUPERVISION OF
(Limited by Business & Professions Code 6735.6(b))

[signature] 7/6/00
GERALD L. MICHAEL R.C.E. 36895 DATE

WAVERTREE STREET

SEE TYPICAL SECTION THIS SHEET

NOTES:

1.) ALL EXISTING OVERHEAD AND BURIED UTILITY LOCATIONS SHALL BE FIELD VERIFIED BY CONTRACTOR PRIOR TO ANY EXCAVATION.
2.) ALL CURB RETURNS SHALL BE 28 FT. RADIUS AT FACE OF CURB UNLESS NOTED OTHERWISE.
3.) STREET TREES TO BE PLANTED A MIN. 8' BEHIND BACK OF SIDEWALK.
4.) UTILITY CONDUITS CROSSING THE STREET SHALL BE A MINIMUM OF THREE FEET CLEAR OF ANY OTHER SERVICE. EXACT LOCATION SHALL BE STATIONED ON "AS-BUILTS".

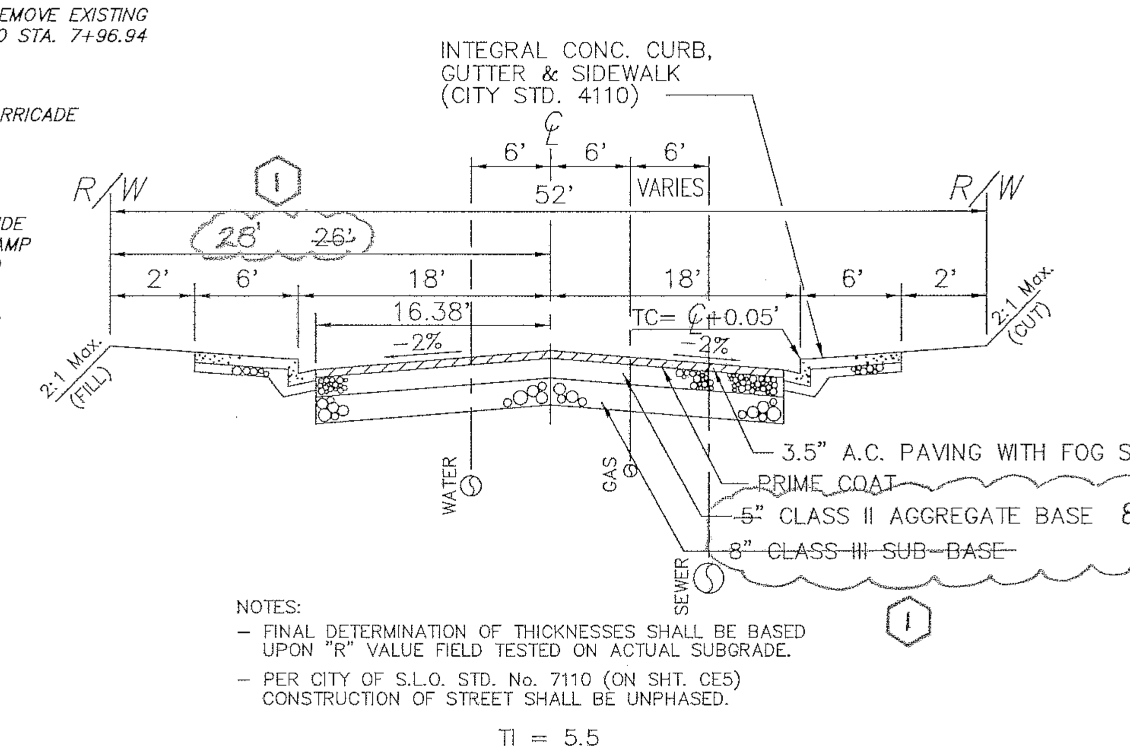

NOTES:
- FINAL DETERMINATION OF THICKNESSES SHALL BE BASED UPON "R" VALUE FIELD TESTED ON ACTUAL SUBGRADE.
- PER CITY OF S.L.O. STD. No. 7110 (ON SHT. CE5) CONSTRUCTION OF STREET SHALL BE UNPHASED.

TI = 5.5

TYPICAL SECTION–ALDER STREET

NO SCALE

NOTE TO CONTRACTOR:

CONNECTIONS TO THE EXISTING SEWER MAIN SHALL BE PERFORMED BY THE CONTRACTOR USING FLEXIBLE SADDLES, BY DFW PLASTICS, INC. ALL INSTALLATIONS SHALL BE PERFORMED TO THE MANUFACTURER'S SPECIFICATIONS. THE CONTRACTOR SHALL NOTIFY THE WASTEWATER COLLECTIONS DEPT. AT 781-7033, AT LEAST 48 HOURS PRIOR TO THE INSTALLATION OF THE FLEXIBLE SADDLES. AFTER INSTALLING ANY FLEXIBLE SADDLE AND PRIOR TO CONNECTING THE CORRESPONDING SEWER LATERAL, THE INSTALLATION SHALL BE PHYSICALLY INSPECTED BY A MEMBER OF THE WASTEWATER COLLECTIONS STAFF. UPON CONNECTION OF ALL SEWER LATERALS IN ANY REACH, THE SEWER MAIN SHALL PASS A VIDEO INSPECTION BY THE WASTEWATER STAFF. ANY BACKFILLING DONE PRIOR TO THE MAIN LINE PASSING VIDEO INSPECTION SHALL BE DONE AT THE CONTRACTOR'S RISK. IF THE VIDEO INSPECTION REVEALS ANY DEFICIENCIES, THE CONTRACTOR SHALL BE HELD RESPONSIBLE FOR EXCAVATION AND REPAIR.

PUBLIC IMPROVEMENT PLANS FOR:
Villas at Islay Creek
TRACT 1750, PHASE 4
STREET IMPROVEMENT PLAN
WAVERTREE STREET

RRM DESIGN GROUP
Architecture · Planning · Engineering · Surveying · Interiors · Landscape Architecture
3026 South Higuera Street, San Luis Obispo, California 93401 805/543-1794
1012 – 11th Street, Modesto, California 95354 209/544-1794
Vic Montgomery, Architect C011090 · Jerry Michael, RCE 36895, LS 6276 · Jeff Ferber, Landscape Architect 2844

ENGINEER OF RECORD:
REGISTERED PROFESSIONAL ENGINEER GERALD L. MICHAEL No. 36895 exp. 6/30/00 CIVIL STATE OF CALIFORNIA
DATE: 9-5-96

DATE	△	REVISIONS DESCRIPTION	APPROVAL DESIGN ENGR.	CITY
6/00	1	AS-BUILT REVISIONS		

DRAWN BY:	CHECKED BY:	JOB NO.	SHEET
MAP	TJW	E96806	8 OF 14

11-6-96

CONSTRUCTION CONTRACTOR AGREES THAT IN ACCORDANCE WITH GENERALLY ACCEPTED CONSTRUCTION PRACTICES, CONSTRUCTION CONTRACTOR WILL BE REQUIRED TO ASSUME SOLE AND COMPLETE RESPONSIBILITY FOR JOB SITE CONDITIONS DURING THE COURSE OF CONSTRUCTION OF THE PROJECT, INCLUDING SAFETY OF ALL PERSONS AND PROPERTY; THAT THIS REQUIREMENT SHALL BE MADE TO APPLY CONTINUOUSLY AND NOT BE LIMITED TO NORMAL WORKING HOURS, AND CONSTRUCTION CONTRACTOR FURTHER AGREES TO DEFEND, INDEMNIFY AND HOLD DESIGN PROFESSIONAL HARMLESS FROM ANY AND ALL LIABILITY, REAL OR ALLEGED IN CONNECTION WITH THE PERFORMANCE OF WORK ON THIS PROJECT, EXCEPTING LIABILITY ARISING FROM THE SOLE NEGLIGENCE OF DESIGN PROFESSIONAL.

UNAUTHORIZED CHANGES & USES: THE ENGINEER PREPARING THESE PLANS WILL NOT BE RESPONSIBLE FOR, OR LIABLE FOR, UNAUTHORIZED CHANGES TO OR USES OF THESE PLANS. ALL CHANGES TO THE PLANS MUST BE IN WRITING AND MUST BE APPROVED BY THE PREPARER OF THESE PLANS.

BICYCLE PATH

C.L. TANGENT N37°47'52"E 25.99' | C.L. CURVE Δ = 59°13'20" R = 30.00' L = 31.01' | C.L. CURVE Δ = 38°32'03" R = 60.00' L = 40.35' | C.L. CURVE Δ = 25°21'41" R = 296.00' L = 131.02' | C.L. TANGENT N33°07'29"E 135.43' | C.L. CURVE Δ = 29°50'04" R = 35.00' L = 18.75' | C.L. TANGENT N03°17'24"E 138.90' | C.L. CURVE Δ = 11°47'33" R = 200.00' L = 41.16' | C.L. CURVE Δ = 03°41'59" R = 1999.00' L = 129.08' | C.L. CURVE Δ = 36°07'25" R = 76.00' L = 47.92' | C.L. CURVE Δ = 23°58'37" R = 96.00' L = 40.17' | C.L. TANGENT N06°38'07"W 21.60' | C.L. CURVE Δ = 62°09'09" R = 30.00' L = 32.54' | C.L. TANGENT N55°31'02"W 76.69'

SPANISH OAKS DRIVE

SEWER MANHOLE #6 SEE SHEET 7 FOR INSTALLATION

C.L. INT. SPANISH OAKS= 13+04.24 BICYCLE PATH= 9+99.30

N75°26'56"E 60.37' SEWER MAIN

Δ=42°19'27" R=225.00' L=166.21' SEWER MAIN

40' MIN. SETBACK TO FUTURE PHASE 5 REAR PROPERTY LINES

N33°07'29"E 149.85 SEWER MAIN

INSTALL SEWER DROP MANHOLE #88A PER CITY OF SLO STD. NO. 6620. STA=13+68.74 / 1.46' RT.

TR. 1750-5

NOT INSTALLED YET MAY CHANGE 6-30-00

INSTALL 4' HIGH WROUGHT IRON FENCE

TOP OF CREEK BANK FIELD VERIFIED BY RRM SURVEY CREW

TRACT BOUNDARY

PLACE 70' LONG BY 8" WIDE "CONTINENTAL" H-SECTION BRIDGE PER MANUFACTURERS SPECIFICATIONS SEE STRUCTURAL PLANS FOR BRIDGE ABUTMENTS

NEW CONCRETE PATH

EX. BIKE PATH TO REMAIN IN PLACE

EC=19+03.22 END BRIDGE

EC=18+33.22 BEG. BRIDGE

INSTALL 4' HIGH WROUGHT IRON FENCE

CONSTRUCT 875 L.F.± 8' WIDE A.C. BIKE PATH PER SECTION

INSTALL 10 LF 8" PVC SEWER MAIN N 62°17'44" E, S=0.40, INV.=220.30-0.02 219.50

INSTALL SEWER MANHOLE #88B PER CITY OF SLO STD. NO. 6610. STA=14+48.07 / 1.04' LT.

35' 10' MISSION STYLE PLACE 45' LONG BY 10'-6" WIDE "RAILROAD-CAR-BRIDGE PER MANUFACTURERS SPECIFICATIONS SEE STRUCTURAL PLANS FOR BRIDGE ABUTMENTS

NOTE: STRUCTURAL PLANS MUST RECEIVE CITY APPROVAL PRIOR TO CONSTRUCTION OF BRIDGES.

BRIDGE PLANS NOT INCLUDED IN THIS AS-BUILT REVISIONS

40 0 20 40 80

(IN FEET) 1 inch = 40 ft.

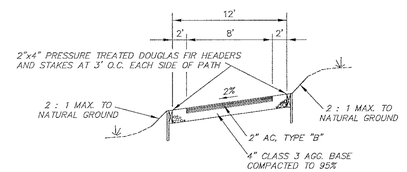

TYPICAL BICYCLE PATH SECTION
-nts-

R R M D E S I G N G R O U P
RECORD DRAWINGS
VILLAS AT ISLAY CREEK
TRACT 1750 PHASE IV
PLANS PREPARED UNDER THE SUPERVISION OF
(Limited by Business & Professions Code 6735.6(b))

Gerald L. Michael 7/6/00
GERALD L. MICHAEL R.C.E. 36895 DATE

PROFILE SCALE
HORIZONTAL: 1" = 40'
VERTICAL: 1" = 4'

EXISTING GRADE AT CENTERLINE

DESIGN GRADE AT CENTERLINE

CONTINENTAL BRIDGE

BRIDGE ABUTMENTS PER STRUCTURAL PLANS

INSTALL 75.03 LF 8" PVC SEWER MAIN S=0.0050

INSTALL 376.43 LF 8" PVC SEWER MAIN S=0.0050

NOTE: EXPOSED SEWER PIPING SHALL BE DUCTILE IRON (CL 150).

BRIDGE ABUTMENT PER STRUCTURAL PLANS

NOTE: FOOTING DEPTH SHALL BE PER SOILS ENGINEER'S RECOMMENDATION

EXISTING GRADE AT CENTERLINE (TYP.)
FINISH GRADE AT CENTERLINE (TYP.)

10+00 11+00 12+00 13+00 14+00 15+00 16+00 17+00 18+00 19+00

R R M D E S I G N G R O U P
Architecture • Planning • Engineering • Surveying • Interiors • Landscape Architecture
3038 South Higuera Street, San Luis Obispo, California 93401 805/543-1794
1212 - 11th Street, Modesto, California 95354 209/544-1794
Tim Montgomery, Architect C011000 • Jerry Michael, RCE 36895, LS 6275 • Jeff Ferber, Landscape Architect 2944

PUBLIC IMPROVEMENT PLANS FOR:
Villas at Islay Creek
TRACT 1750, PHASE 4
BICYCLE PATH IMPROVEMENT PLAN

ENGINEER OF RECORD: REGISTERED PROFESSIONAL ENGINEER GERALD L. MICHAEL No. 36895 exp. 6/30/01 CIVIL STATE OF CALIFORNIA
DATE: 9-5-96

DATE	△	REVISIONS DESCRIPTION	APPROVAL DESIGN ENGR.	APPROVAL CITY
6/00	1	AS-BUILT REVISIONS		

DRAWN BY: MAP | CHECKED BY: TJW | JOB NO. E96806 | SHEET 9 OF 14

11-6-96

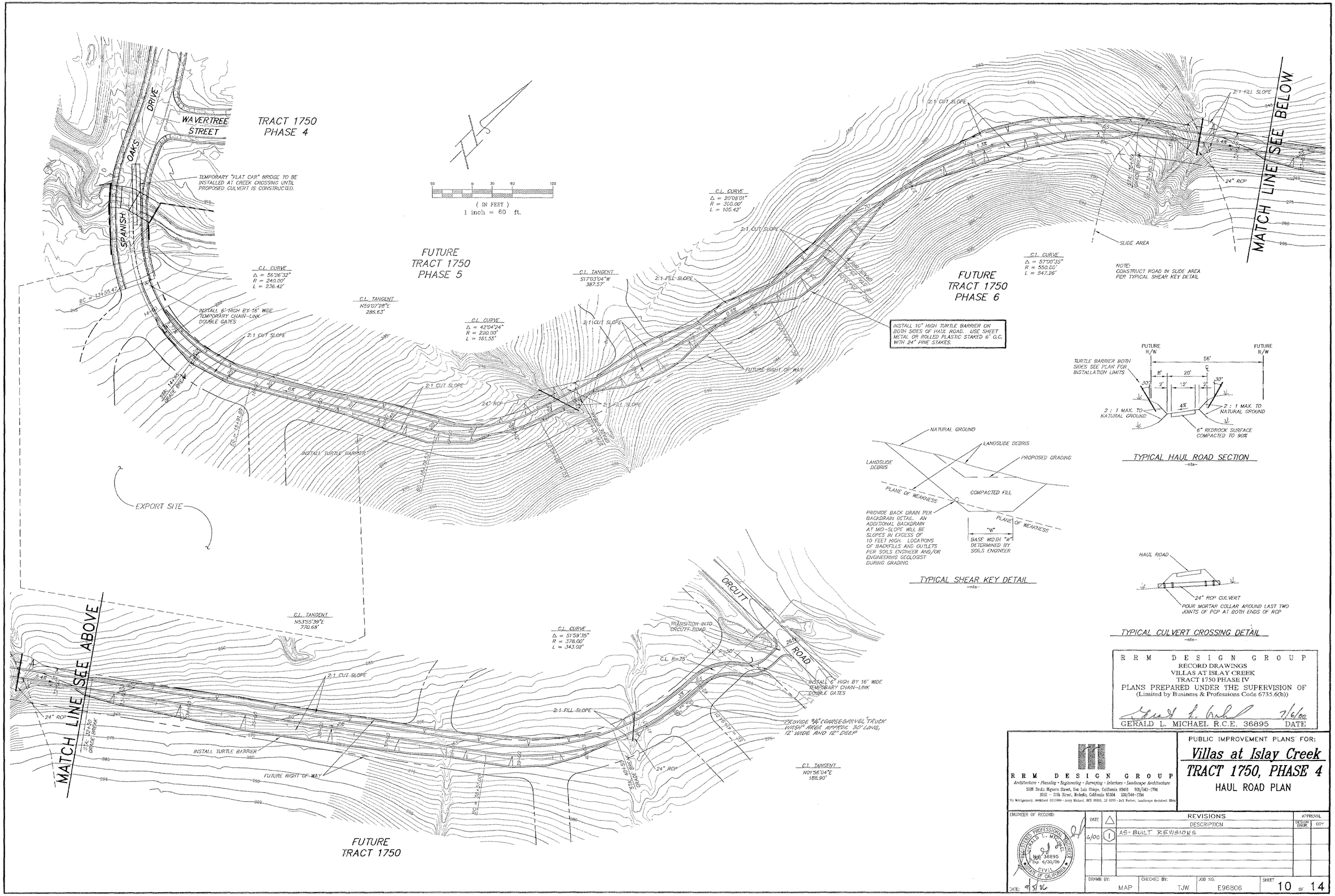

R R M D E S I G N G R O U P
RECORD DRAWINGS
VILLAS AT ISLAY CREEK
TRACT 1750 PHASE IV
PLANS PREPARED UNDER THE SUPERVISION OF
(Limited by Business & Professions Code 6735.6(b))

7/6/00
GERALD L. MICHAEL R.C.E. 36895 DATE

R R M D E S I G N G R O U P
Architecture • Planning • Engineering • Surveying • Interiors • Landscape Architecture
3326 South Higuera Street, San Luis Obispo, California 93401 805/543-1794
1012 - 11th Street, Modesto, California 95354 209/544-1794
Via Montgomery, Architect C011000 - Jerry Michael, RCE 36895, LS 6293 - Jeff Farber, Landscape Architect 2844

PUBLIC IMPROVEMENT PLANS FOR:
Villas at Islay Creek
TRACT 1750, PHASE 4
HAUL ROAD PLAN

ENGINEER OF RECORD:
REGISTERED PROFESSIONAL ENGINEER GERALD L. MICHAEL No. 36895 Exp. 6/30/00 CIVIL STATE OF CALIFORNIA
DATE: 9/5/96

DATE	△	REVISIONS DESCRIPTION	APPROVAL DESIGN ENGR.	CITY
6/00	1	AS-BUILT REVISIONS		

DRAWN BY:	CHECKED BY:	JOB NO.	SHEET
MAP	TJW	E96806	10 OF 14

11-6-96

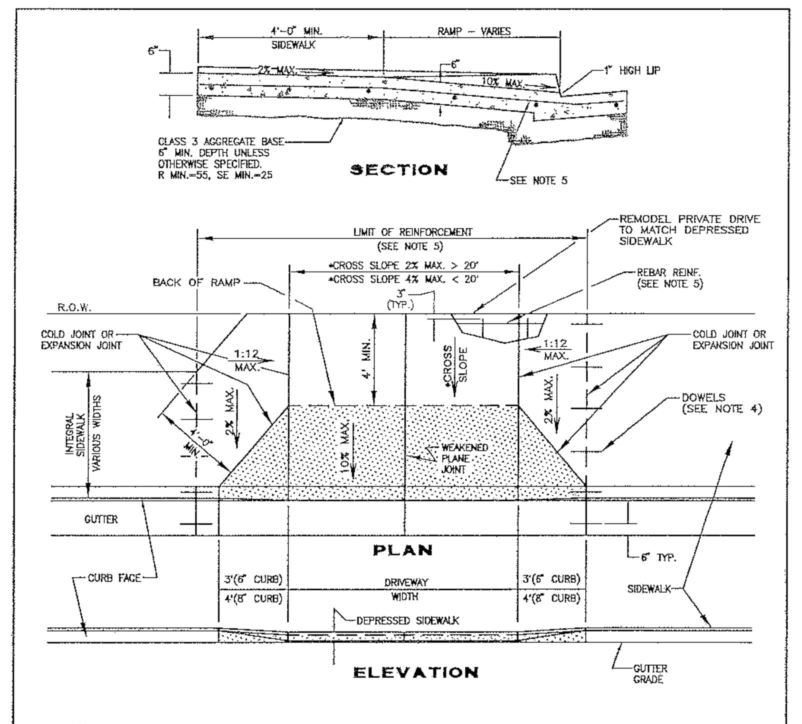

NOTES:
1. A DEPRESSION IN A NEW CURB AND GUTTER FOR A DRIVEWAY WILL NOT BE PERMITTED UNLESS THE RAMP AND SIDEWALK EXTENSION ARE CONSTRUCTED ALSO.
2. SLOPE OF RAMP IS A STRAIGHT GRADE FROM THE TOP OF THE BACK OF RAMP TO THE TOP OF THE 1" LIP AT THE GUTTER.
3. CONCRETE SHALL BE 5-SACK, SLUMP: 2" MIN., 4" MAX.
4. DOWELS AT EXPANSION, OR COLD JOINT, WITH NEW CONSTRUCTION SHALL BE 1/2" SMOOTH BARS, 18" LONG AT 24" O.C., ONE END SHALL BE SLEEVED OR GREASED.
5. ALL RAMPS AND SIDEWALK SHALL BE REINFORCED WITH REBAR, #4 @ 24" O.C., CONTINUOUS BOTH WAYS. (REBAR SHALL RUN CONTINUOUS THROUGH COLD OR EXPANSION JOINTS).
6. COMMERCIAL & INDUSTRIAL DRIVEWAY RAMPS SERVING MORE THAN SIX(6) PARKING SPACES SHALL BE 10ft. DEEP (LONG) UNLESS OTHERWISE APPROVED BY THE CITY ENGINEER.
7. SEE STANDARD DRAWING NO. 4110 FOR NOTES REGARDING REQUIRED PAVEMENT REMOVAL & REPAIR.
8. THIS DESIGN MUST BE APPROVED FOR USE BY ENGINEER.

APPROVED BY CITY ENGINEER — DATE

REVISIONS	BY	APP	DATE
New Standard	RMH	WAP	8-95
Change Note 7	RMH	WAP	9-95

city of san luis obispo — PARKING & DRIVEWAY STANDARDS — DRIVEWAY RAMP R.O.W. LESS THAN 10' — 2111

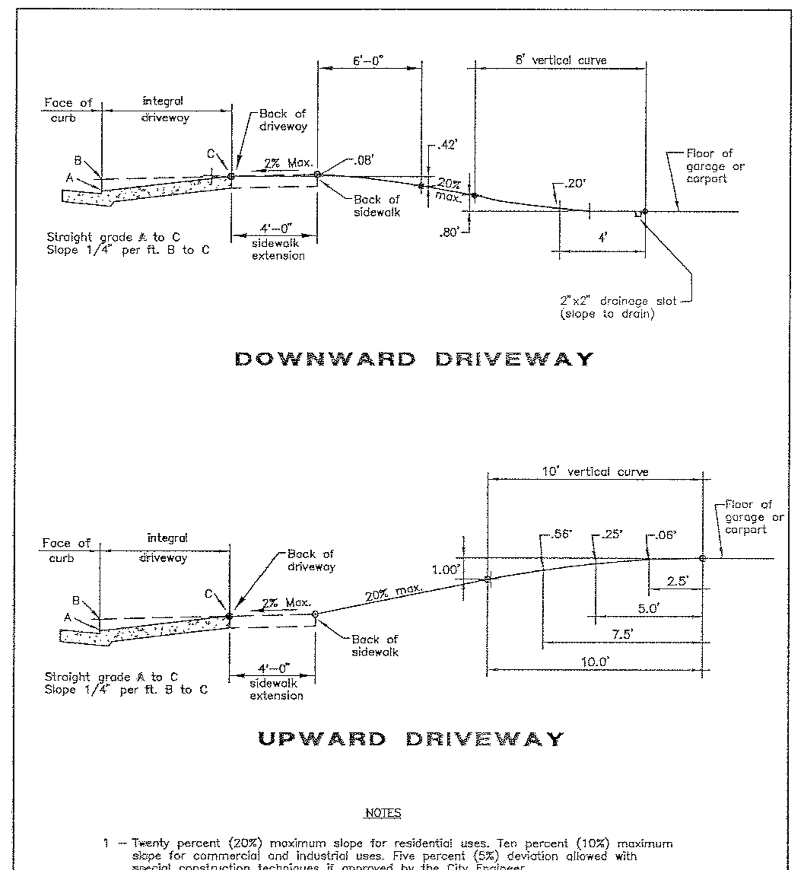

NOTES
1 — Twenty percent (20%) maximum slope for residential uses. Ten percent (10%) maximum slope for commercial and industrial uses. Five percent (5%) deviation allowed with special construction techniques if approved by the City Engineer.
2 — Maximum rise & descent, and the run, shall be measured for the worst condition between the back of the sidewalk extension and the finished floor, at the garage or carport entrance.
3 — Sidewalk extension cross-slope may not exceed 2% and must slope towards street.

APPROVED BY CITY ENGINEER — DATE

REVISIONS	BY	APP	DATE
Redrawn To CAD	RMH	MDW	1-95
Sidewalk Extension	RMH	WAP	7-95

city of san luis obispo — PARKING & DRIVEWAY STANDARDS — STANDARD DRIVEWAY UPWARD & DOWNWARD — 2130

MAXIMUM RISE & DESCENT PERMITTED ON STANDARD DRIVEWAYS IN THE CITY OF SAN LUIS OBISPO

UPWARD DRIVEWAY MAXIMUM RISE				DOWNWARD DRIVEWAY MAXIMUM DESCENT			
Run	Maximum Rise	Run	Maximum Rise	Run	Maximum Descent	Run	Maximum Descent
10'	1.0'	39'	6.8'	6'	.4'	35'	5.4'
11'	1.2'	40'	7.0'	7'	.5'	36'	5.6'
12'	1.4'	41'	7.2'	8'	.6'	37'	5.8'
13'	1.6'	42'	7.4'	9'	.7'	38'	6.0'
14'	1.8'	43'	7.6'	10'	.9'	39'	6.2'
15'	2.0'	44'	7.8'	11'	1.0'	40'	6.4'
16'	2.2'	45'	8.0'	12'	1.1'	41'	6.6'
17'	2.4'	46'	8.2'	13'	1.2'	42'	6.8'
18'	2.6'	47'	8.4'	14'	1.3'	43'	7.0'
19'	2.8'	48'	8.6'	15'	1.4'	44'	7.2'
20'	3.0'	49'	8.8'	16'	1.6'	45'	7.4'
21'	3.2'	50'	9.0'	17'	1.8'	46'	7.6'
22'	3.4'	51'	9.2'	18'	2.0'	47'	7.8'
23'	3.6'	52'	9.4'	19'	2.2'	48'	8.0'
24'	3.8'	53'	9.6'	20'	2.4'	49'	8.2'
25'	4.0'	54'	9.8'	21'	2.6'	50'	8.4'
26'	4.2'	55'	10.0'	22'	2.8'	51'	8.6'
27'	4.4'	56'	10.2'	23'	3.0'	52'	8.8'
28'	4.6'	57'	10.4'	24'	3.2'	53'	9.0'
29'	4.8'	58'	10.6'	25'	3.4'	54'	9.2'
30'	5.0'	59'	10.8'	26'	3.6'	55'	9.4'
31'	5.2'	60'	11.0'	27'	3.8'	56'	9.6'
32'	5.4'	61'	11.2'	28'	4.0'	57'	9.8'
33'	5.6'	62'	11.4'	29'	4.2'	58'	10.0'
34'	5.8'	63'	11.6'	30'	4.4'	59'	10.2'
35'	6.0'	64'	11.8'	31'	4.6'	60'	10.4'
36'	6.2'	65'	12.0'	32'	4.8'	65'	11.4'
37'	6.4'	70'	13.0'	33'	5.0'	70'	12.4'
38'	6.6'	80'	15.0'	34'	5.2'	80'	14.4'

NOTE:
MAXIMUM RISE & DESCENT, AND THE RUN, SHALL BE MEASURED FOR THE WORST CONDITION BETWEEN THE BACK OF THE SIDEWALK EXTENSION AND THE FINISHED FLOOR AT THE GARAGE ENTRANCE.

APPROVED BY CITY ENGINEER — DATE

REVISIONS	BY	APP	DATE
Redrawn To CAD	RMH	MDW	1-95
Comb. w/ STD. 2160	RMH	WAP	7-95

city of san luis obispo — PARKING & DRIVEWAY STANDARDS — UPWARD & DOWNWARD DRIVEWAY MAXIMUM RISE & DESCENT (RESIDENTIAL) — 2140

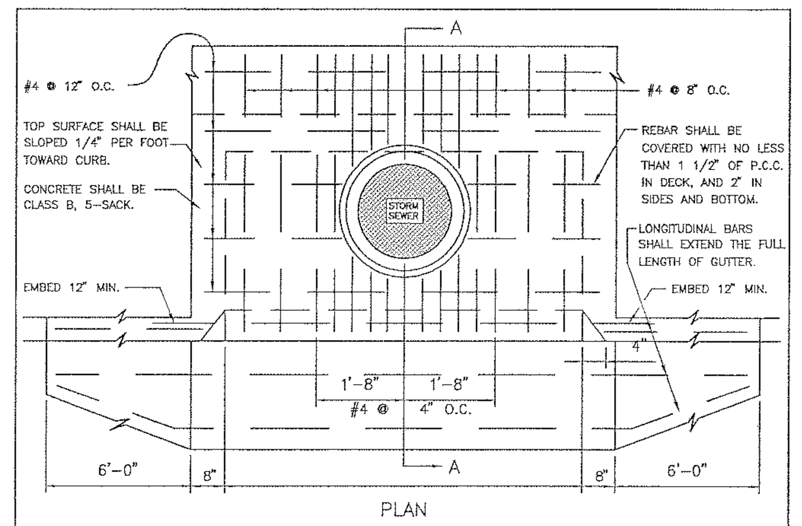

ITEMS ① THRU ③ SHALL BE ALHAMBRA, GALVANIZED, OR APPROVED EQUAL.
① FORMED STEEL FACE PLATE, A-3911-G ANCHORS SHALL BE FACTORY-INSTALLED.
② PROTECTION BAR, A-1565. BAR END ANCHORS, A-1577.
③ PROTECTION BAR SUPPORT BOLT(S), A-1574, SPACED 21" APART MAXIMUM.
④ STEPS ARE REQUIRED WHEN DEPTH EXCEEDS 4 FT. AND SHALL BE STEEL-REINFORCED COPOLYMER POLYPROPYLENE, M-A INDUSTRIES PS2-PFS, OR EQUAL.
⑤ MANHOLE COVER AND FRAME, PHOENIX P-1067, ALHAMBRA A-1530, OR APPROVED EQUAL (ALHAMBRA A-1137 WHEN IN MISSION TILE SIDEWALK) PLACED ADJACENT TO BACK WALL NEAR OUTLET PIPE.
⑥ CURB HEIGHT MINUS 2".
⑦ CURB OPENING WIDTH SHALL NOT BE LESS THAN 3'-6" AND MAY ONLY BE INCREASED IN 3'-6" INCREMENTS.
⑧ SEE STANDARD DRAWING NO. 4110 FOR NOTES REGARDING REQUIRED PAVEMENT REMOVAL & REPAIR.

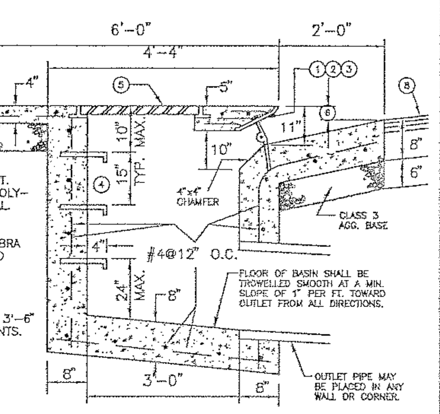

SECTION A-A

APPROVED BY CITY ENGINEER — DATE

REVISIONS	BY	APP	DATE
Redrawn To CAD	RMH	MDW	1-95
Change Note 8	RMH	WAP	9-95

city of san luis obispo — CATCH BASIN SIDE OPENING — 3350

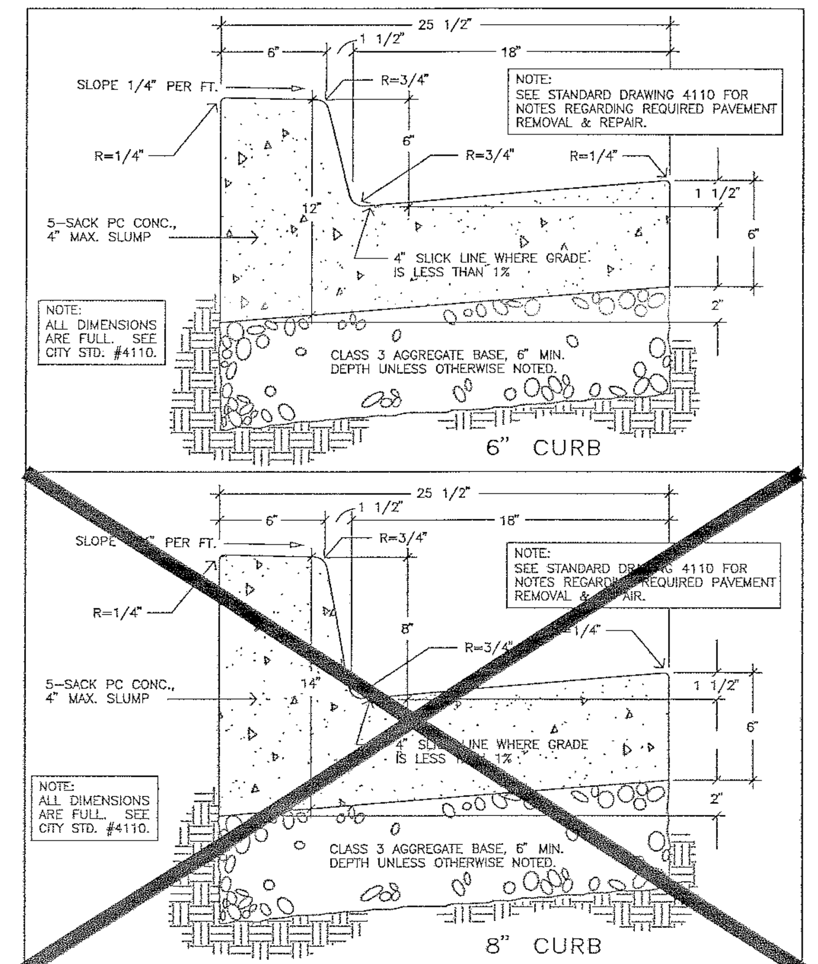

APPROVED BY CITY ENGINEER — DATE

REVISIONS	BY	APP	DATE
Added Pavement Note	RMH	WAP	9-95

city of san luis obispo — CURB & 18" GUTTER — 4030

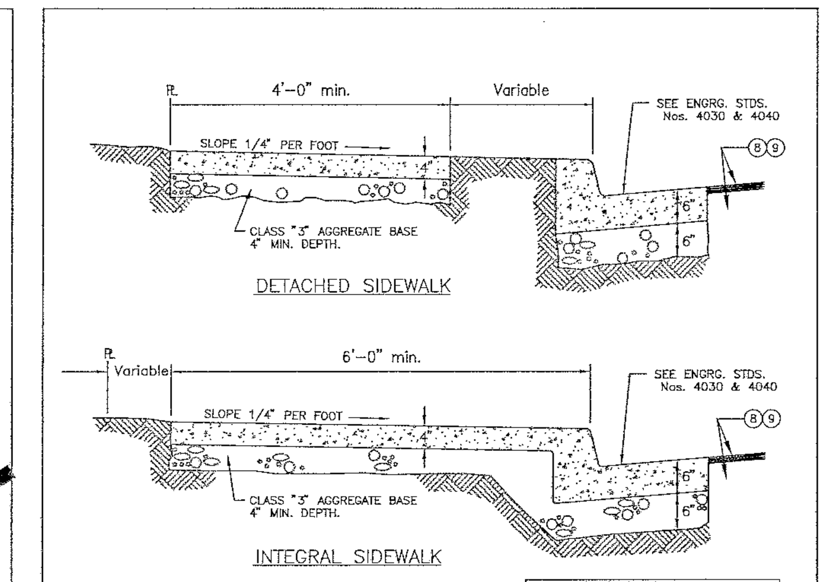

INTEGRAL SIDEWALK IS THE CITY STANDARD, DETACHED SIDEWALK SHALL NOT BE USED WOTHOUT APPROVAL OF CITY ENGINEER.

① CONCRETE: 5 sack P.C. Concrete, 2" min. 4" max. slump.
② FINISH: P.C.C. sidewalk shall be given a broom finish.
③ SEALING & CURING: A pigmented sealing and curing compound shall be used in accordance with the provisions of the Department of Transportation Standards Specifications.
④ DOWELS: 1/2" smooth bar dowels, 18" long at 24" O.C. at expansion joints and cold joints, to be greased or sleeved on one end.
⑤ EXPANSION JOINTS: 1/4" expansion material shall be placed at driveways and B.C.Rs.
⑥ WEAKENED PLANE JOINTS: Plastic pulltop quickjoint strips or approved equal shall be at 20' O.C. and 1 1/2" deep.
⑦ FOR ADDING SIDEWALK TO EXIST. CURB: #4x6" dowels shall be drilled in back of curb at 24" O.C.
⑧ PAVEMENT REMOVAL & REPAIR: Sawcut, remove & replace A.C. paving, 18" min. from gutter, 2" thicker than existing (5" min.). If pavement is P.C.C., sawcut exist. P.C.C. paving at gutter lip, dowel new gutter to exist. P.C.C. pavement. If exist. P.C.C. pavement has an A.C. cap, sawcut and remove A.C. cap 18" min. (except as required in note 9) from gutter and 3 ft. up & downstream and replace A.C. to provide a smooth uniform surface to match existing surfaces.
⑨ BIKE LANES: No longitudinal joints or seams are allowed in bike lanes. If a longitudinal joint may result due to the contractors work, or the above requirments, the contractor shall remove a minimum of 2 inches of asphalt from the pavement across the entire bike lane using a method approved by the City and resurface the bike lane to the satisfaction of the City.

APPROVED BY CITY ENGINEER — DATE

REVISIONS	BY	APP	DATE
Added Note 9	RMH	WAP	9-95
Change Note 8	RMH	WAP	9-95

city of san luis obispo — SIDEWALK INTEGRAL & DETACHED — 4110

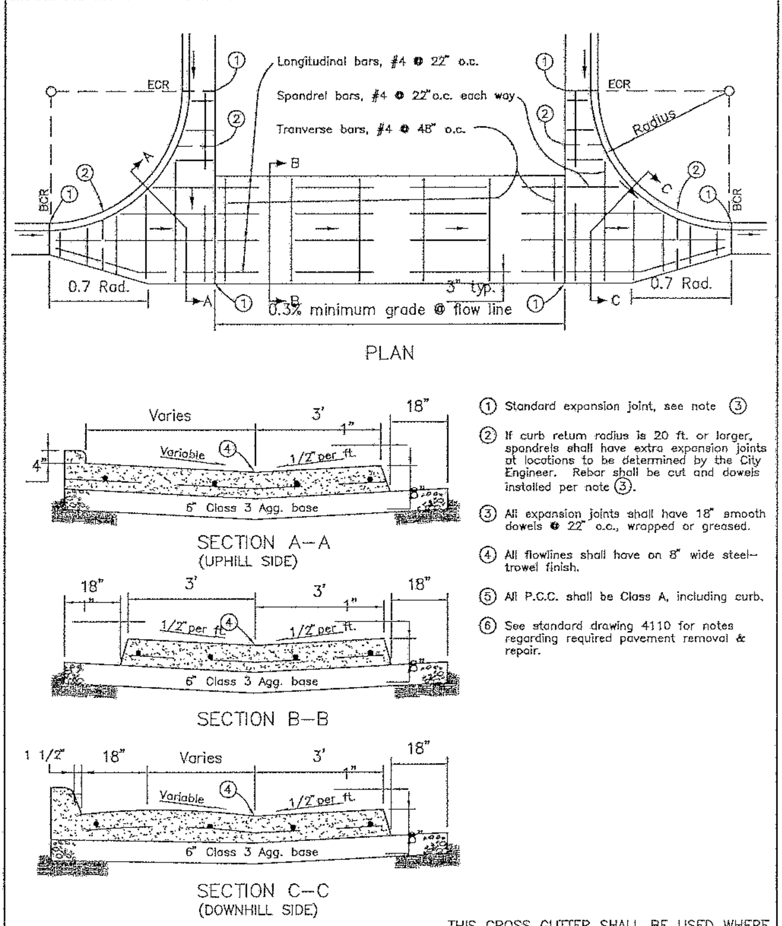

① Standard expansion joint, see note ③
② If curb return radius is 20 ft. or larger, spandrels shall have extra expansion joints at locations to be determined by the City Engineer. Rebar shall be cut and dowels installed per note ③.
③ All expansion joints shall have 18" smooth dowels @ 22" o.c., wrapped or greased.
④ All flowlines shall have an 8" wide steel-trowel finish.
⑤ All P.C.C. shall be Class A, including curb.
⑥ See standard drawing 4110 for notes regarding required pavement removal & repair.

THIS CROSS GUTTER SHALL BE USED WHERE TRAFFIC WOULD NORMALLY STOP OR YIELD

APPROVED BY CITY ENGINEER — DATE

REVISIONS	BY	APP	DATE
Redrawn To CAD	RMH	MDW	1-95
Change Note 6	RMH	WAP	9-95

city of san luis obispo — CROSS GUTTER — 4310

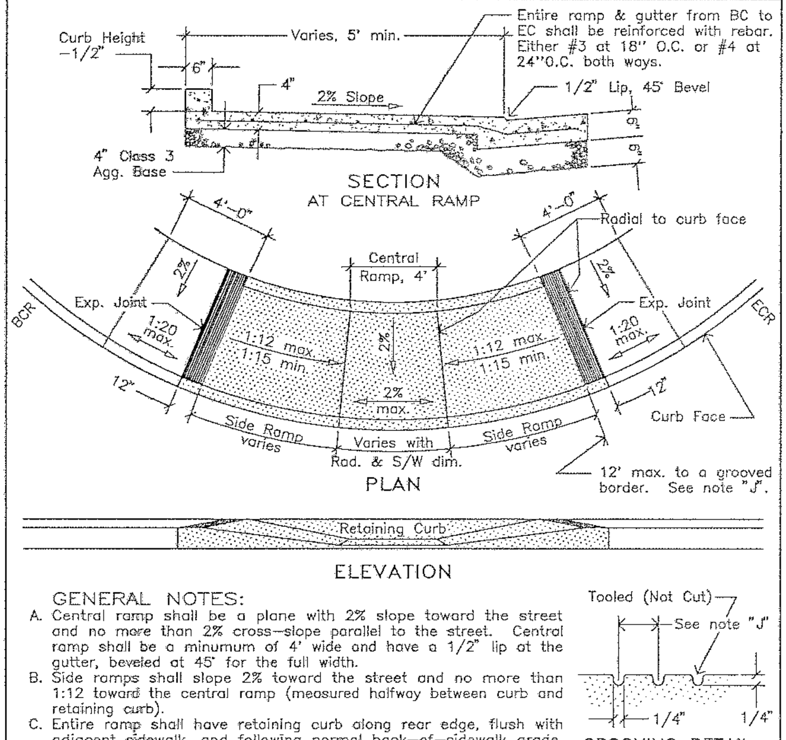

GENERAL NOTES:
A. Central ramp shall be a plane with 2% slope toward the street and no more than 2% cross-slope parallel to the street. Central ramp shall be a minumum of 4' wide and have a 1/2" lip at the gutter, beveled at 45° for the full width.
B. Side ramps shall slope 2% toward the street and no more than 1:12 toward the central ramp (measured halfway between curb and retaining curb).
C. Entire ramp shall have retaining curb along rear edge, flush with adjacent sidewalk, and following normal back-of-sidewalk grade.
D. Ramp shall be located at center of curb return. (See note E.)
E. This ramp design shall not be used without consideration for street grade and drainage. Due to unusual or difficult site conditions, the above requirements may be difficult or impossible to meet. Exceptions may be granted on an individual basis by the City Engineer.
F. Central and side ramps shall have a medium broom finish.
G. Concrete shall be Class B, 5-SACK, slump 2" minimum to 4" maximum.
H. Ramp shall have expansion joints at locations shown. Dowels at expansion joints shall be 1/2" smooth bars, 18" long at 24" o.c., to be sleeved or greased.
I. See standard drawing 4110 for notes regarding required pavement removal & repair.
J. Sidewalk at top of each side ramp shall have a 12" wide grooved border with grooves 3/4" apart (See Grooving Detail). If distance to top of ramp exceeds 12', place an additional grooved border at 12' from bottom. Grooves on slopes to be 1 1/2" apart.

APPROVED BY CITY ENGINEER — DATE

REVISIONS	BY	APP	DATE
Change Note I.	RMH	WAP	9-95
Tooled Groove	RMH	WAP	7-95

city of san luis obispo — CORNER CURB RAMP (FOR 20' RADIUS & LARGER) — 4441

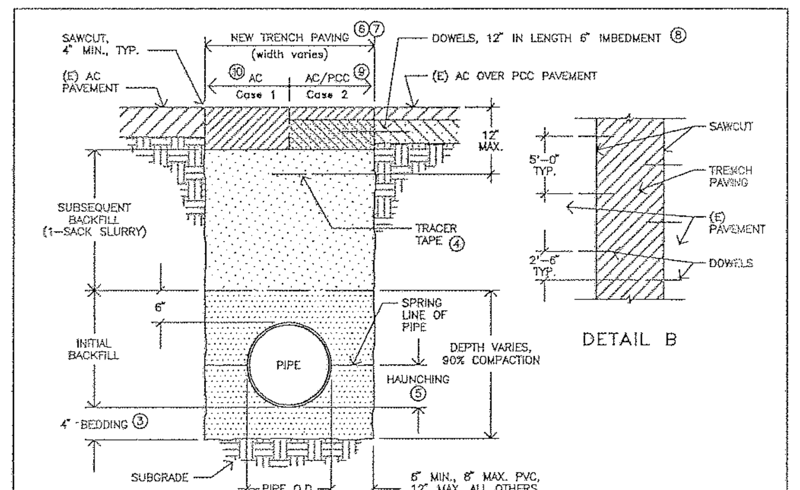

NOTES:
① Trench shall be backfilled with select backfill material, leveled, and compacted to 6" above pipe. (See CITY STANDARD SPECIFICATIONS.) The remainder (subsequent backfill) shall be a plant-mixed 1-sack sand (cement) slurry, vibrated with 1" min. stinger.
② Entire excavation may be backfilled with 2-sack slurry in lieu of initial select backfill upon approval from the City Engineer.
③ Bedding material shall be mechanically compacted to 90% prior to placement of pipe.
④ If non-metallic pipe is used, magnetic tracer tape shall be placed as shown above.
⑤ When PVC is used, pipe shall be backfilled to the spring line and compacted to 90% prior to completing initial backfill.
⑥ The streets of San Luis Obispo are generally paved with either AC, PCC, or a combination of the two. Unless clearly indicated on the plans, it is the contractor's responsibility to determine the nature of the paving material. (Case 1 — AC only, Case 2 — AC over PCC.)
⑦ Replacement pavement shall be "in kind" including seal coat, except as approved by the City Engineer.
⑧ All concrete street sections require 1/2" smooth steel dowels @ 5' o.c., each side of trench, staggered per Detail B above.
⑨ New PCC shall not be brought above existing PCC, shall be Class B, and shall be equal to existing PCC but not less than 8" thick.
⑩ When only AC is used, new AC shall be 2" thicker than existing AC and no less than 5" thick.
⑪ No longitudinal joints or seams are allowed in bike lanes. If a longitudinal joint may result due to the contractors work, or this requirment, the contractor shall remove a minimum of 2 inches of asphalt from the pavement across the entire bike lane using a method approved by the City and resurface the bike lane to the satisfaction of the City.

USE OF ANY OTHER STANDARD, SHALL BE APPROVED BY THE CITY ENGINEER.

APPROVED BY CITY ENGINEER — DATE

REVISIONS	BY	APP	DATE
1-Sack Slurry, Note 1	RMH	MDW	1-95
Add Note 11	RMH	WAP	9-95

city of san luis obispo — TRENCH DETAIL #2 (PAVED OR UNPAVED STREETS) — 6025

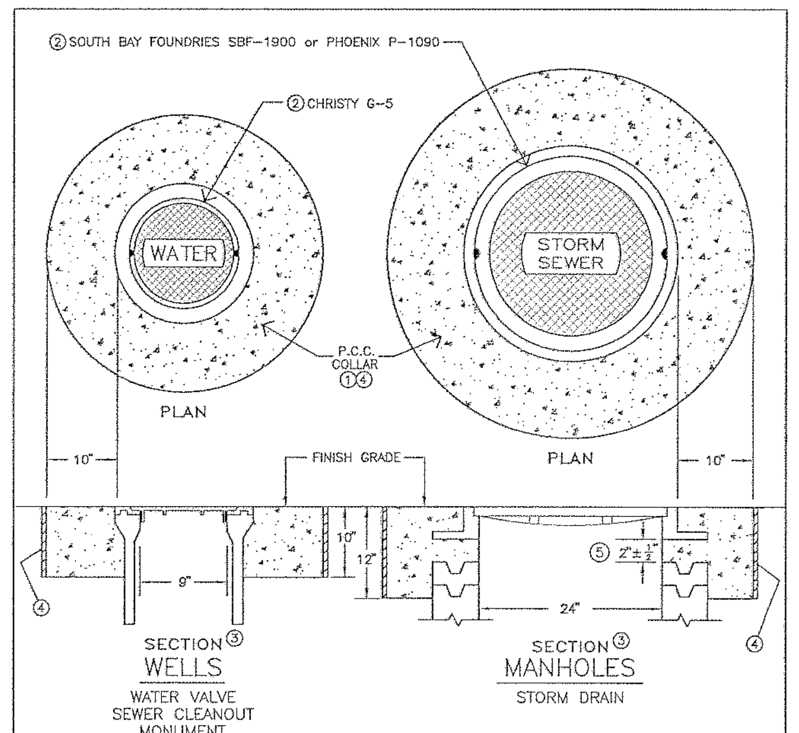

NOTES:
① Concrete shall be Class "A" concrete, troweled to street grade, and allowed to cure for 48 hours prior to any traffic use. 7-sack concrete may be required to allow next-day traffic use.
② All utility covers to be raised shall be replaced, if needed, to conform to covers specified above. Covers shall be imprinted with the appropriate utility name.
③ Depth and radius dimensions shown apply to similar covers that are not shown.
④ Collars constructed in P.C.C. streets shall be circular in shape and shall be separated from the adjacent P.C.C. street by either a cold joint or a tin form.
⑤ 2" clearance applies to the low side of the frame. Clearance may be greater on the high side as dictated by the street grades and as directed by the City Engineer.

APPROVED BY CITY ENGINEER — DATE

REVISIONS	BY	APP	DATE
Add Nt 4, Chg. Nt. 1	RMH	WAP	9-95
2.5" clearance	BFL	WAP	1-96

city of san luis obispo — UTILITY COVER GRADE ADJUSTMENT P.C.C. COLLAR — 6040

GENERAL NOTES:
A. A 14ga min. insulated solid copper tracer wire shall be tied to corp stop, taped to service line at 6' max. intervals and run up into meter box with 2' to 3' extra coiled up inside.
B. House holders shall be notified at least one hour prior to shutting off service for making connection.
C. In cases where fire sprinklers may be desirable or required, 1" lines shall be copper.

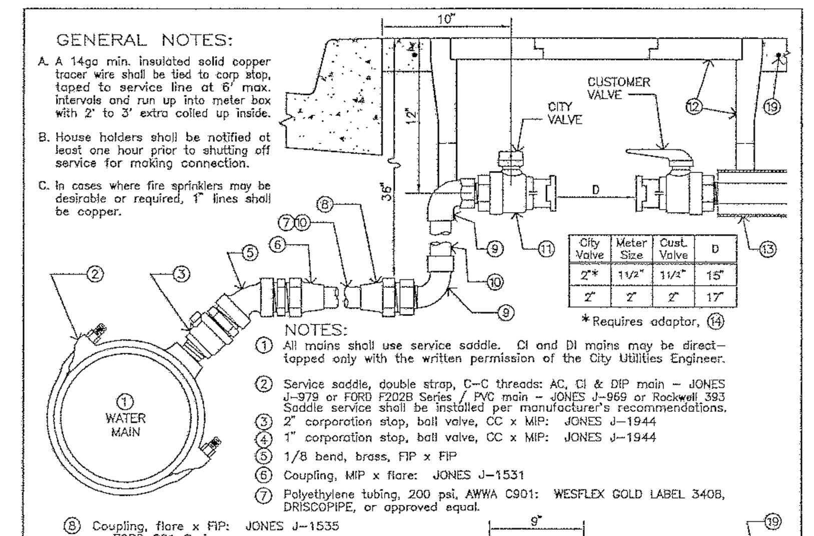

City Valve	Meter Size	Cust. Valve	D
2"*	1 1/2"	1 1/2"	15"
2"	2"	2"	17"

*Requires adaptor, ⑭

NOTES:
① All mains shall use service saddle. CI and DI mains may be direct-tapped only with the written permission of the City Utilities Engineer.
② Service saddle, double strap, C-C threads: AC, CI & DIP main — JONES J-979 or FORD F202B Series / PVC main — JONES J-969 or Rockwell 393 Saddle service shall be installed per manufacturer's recommendations.
③ 2" corporation stop, ball valve, CC x MIP: JONES J-1944
④ 1" corporation stop, ball valve, CC x MIP: JONES J-1944
⑤ 1/8 bend, brass, FIP x FIP
⑥ Coupling, MIP x flare: JONES J-1531
⑦ Polyethylene tubing, 200 psi, AWWA C901: WESFLEX GOLD LABEL 3408, DRISCOPIPE, or approved equal.
⑧ Coupling, flare x FIP: JONES J-1535 or FORD C21 Series
⑨ 1/4 bend, MIP x sweat
⑩ Copper tubing, type K, soft
⑪ Curb stop, ball valve: JONES J-1913W or FORD BF 13 Series
⑫ Meter box and lid: BROOKS 65 Series, when located in driveway, shall be 65-TR (Traffic Lid.)
⑬ Install 3" diameter sleeve to 12" behind back of sidewalk.

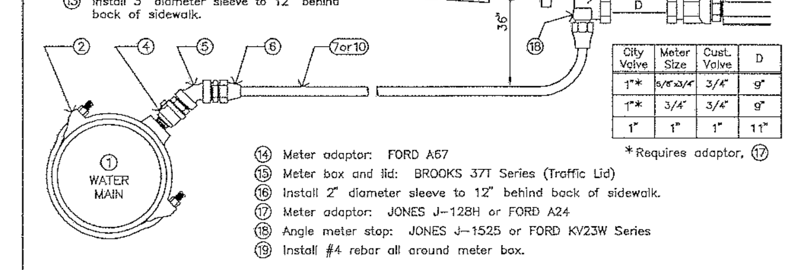

City Valve	Meter Size	Cust. Valve	D
1"*	5/8"x3/4"	3/4"	9"
1"*	3/4"	3/4"	9"
1"	1"	1"	11"

*Requires adaptor, ⑰

⑭ Meter adaptor: FORD A67
⑮ Meter box and lid: BROOKS 37T Series (Traffic Lid)
⑯ Install 2" diameter sleeve to 12" behind back of sidewalk.
⑰ Meter adaptor: JONES J-128H or FORD A24
⑱ Angle meter stop: JONES J-1525 or FORD KV23W Series
⑲ Install #4 rebar all around meter box.

THIS DETAIL APPLIES TO NEW SERVICE ON NEW OR EXISTING WATER MAIN.

APPROVED BY CITY ENGINEER — DATE

REVISIONS	BY	APP	DATE
Redrawn to CAD	JDL	MDW	9-94
Eliminate Polybutylene	RMH	MDW	1-95

city of san luis obispo — NEW WATER SERVICE 1" and 2" — May 95 Edition — 6210

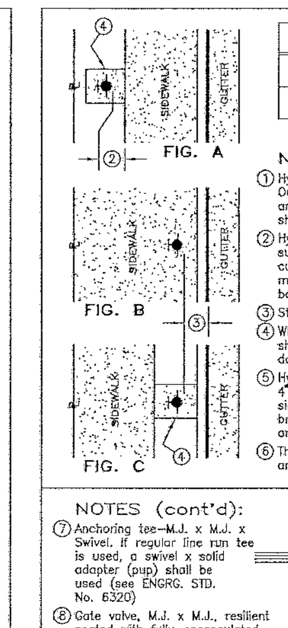

APPLICATION	OUTLETS 2 1/2"	OUTLETS 4 1/2"	HYDRANT
STANDARD HYDRANT	1	2	JONES 3770 or CLOW 2065
RESIDENTIAL * R-1 / R-2	2	1	JONES 3760 or CLOW 2060

* MAY BE USED ONLY WITH PERMISSION OF FIRE DEPT.

NOTES:
① Hydrant shall have 6-hole flange and bronze caps. Outlets shall be 2 1/2" National Standard hose thread and 4 1/2" National Standard thread. 4 1/2" outlets shall point toward street.
② Hydrant shall be located behind sidewalk if sufficient right-of-way exists (Fig. A), or behind curb (Fig. B, C). If located behind sidewalk, 12" minimum clearance shall be provided between back of sidewalk and outlet cap nut.
③ Standard setback from curb face, 18" — 21".
④ When located in unpaved area, hydrant installation shall include 4' x 4' x 6" minimum P.C.C. pad, doweled into curb and sidewalk, #4 @ 18" o.c.
⑤ Hydrant shall be installed to provide 3" min. to 4" max. clearance between underside of flange and sidewalk surface, and shall have 5/8" x 3" drilled breakaway bolts installed, with nuts on top of flange and bolts filled with silicone or butyl caulk.
⑥ Thrust block, Class B P.C.C., shielded from flanges and bolts.

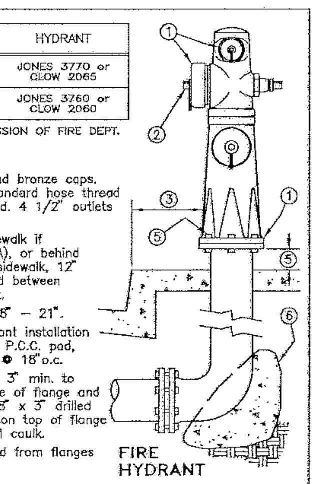

FIRE HYDRANT

NOTES (cont'd):
⑦ Anchoring tee-M.J. x M.J. x Swivel. If regular line run tee is used, a swivel x solid adapter (pup) shall be used (see ENGRG. STD. No. 6320)
⑧ Gate valve, M.J. x M.J., resilient seated with fully-encapsulated waterway, open to the left, non-rising stem with O-ring seals, AVK, CLOW F-1600, or approved equal, and shall conform to AWWA Standard C-509. (See ENGRG. STD. No. 6340)
⑨ See ENGRG. STD. No. 6340 for valve well & collar details.
⑩ Tapping sleeve — MUELLER H-610, M.J., Class 125, ROMAC SST — stainless steel, or approved equal.
⑪ Tapping valve — MUELLER H-667, M.J., O-ring type, Class 125.
⑫ Split in swivel gland shall be offset from split in tapping sleeve by one bolt position.
⑬ Laterals shall be PVC or ductile iron, 6" min. diameter.

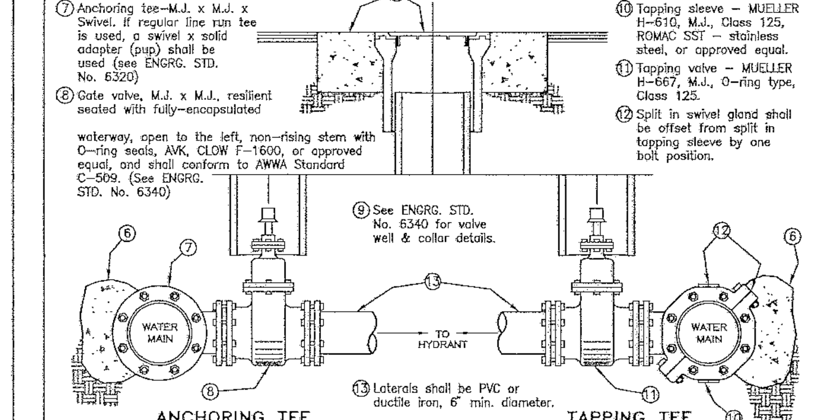

ANCHORING TEE — TAPPING TEE

APPROVED BY CITY ENGINEER — DATE

REVISIONS	BY	APP	DATE
Redrawn To CAD	RMH	MDW	5-94
Expand Note 8	RMH	MDW	3-95

city of san luis obispo — FIRE HYDRANT ASSEMBLY — May 95 Edition — 6310

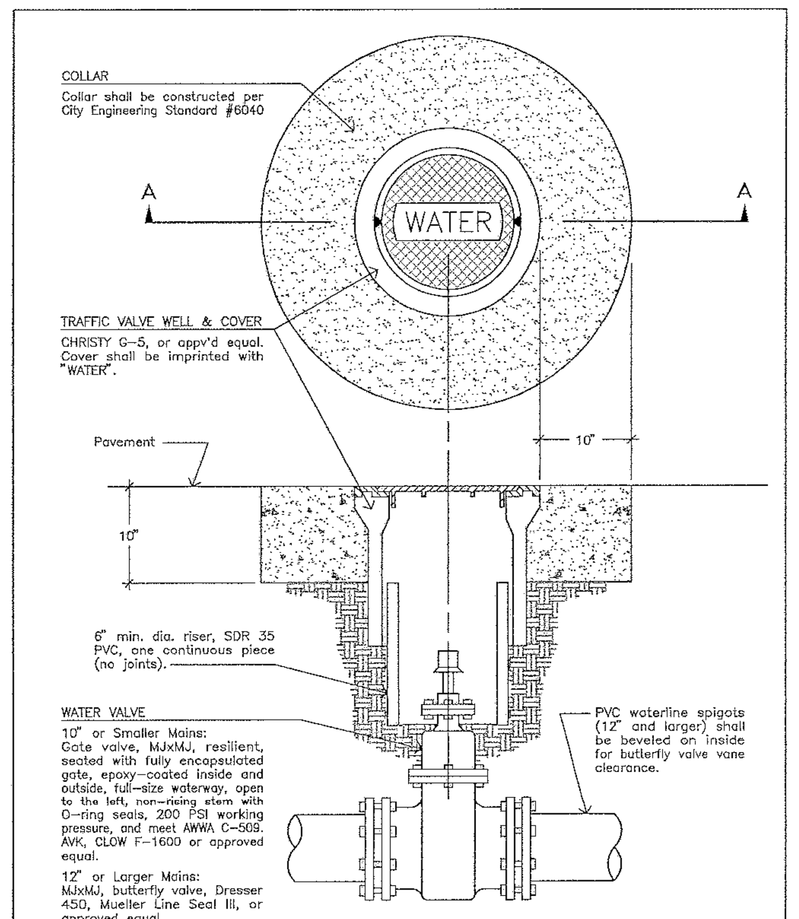

COLLAR
Collar shall be constructed per City Engineering Standard #6040

TRAFFIC VALVE WELL & COVER
CHRISTY G-5, or appv'd equal. Cover shall be imprinted with "WATER".

6" min. dia. riser, SDR 35 PVC, one continuous piece (no joints).

WATER VALVE
10" or Smaller Mains:
Gate valve, MJxMJ, resilient, seated with fully encapsulated gate, epoxy-coated inside and outside, full-size waterway, open to the left, non-rising stem with O-ring seals, 200 PSI working pressure, and meet AWWA C-509. AVK, CLOW F-1600 or approved equal.
12" or Larger Mains:
MJxMJ, butterfly valve, Dresser 450, Mueller Line Seal III, or approved equal.

PVC waterline spigots (12" and larger) shall be beveled on inside for butterfly valve vane clearance.

SECTION A-A

APPROVED BY CITY ENGINEER — DATE

REVISIONS	BY	APP	DATE
Eliminate VCP Riser	RMH	MDW	3-95
Change "Collar" Note	RMH	WAP	9-95

city of san luis obispo — WATER VALVE & WELL — 6340

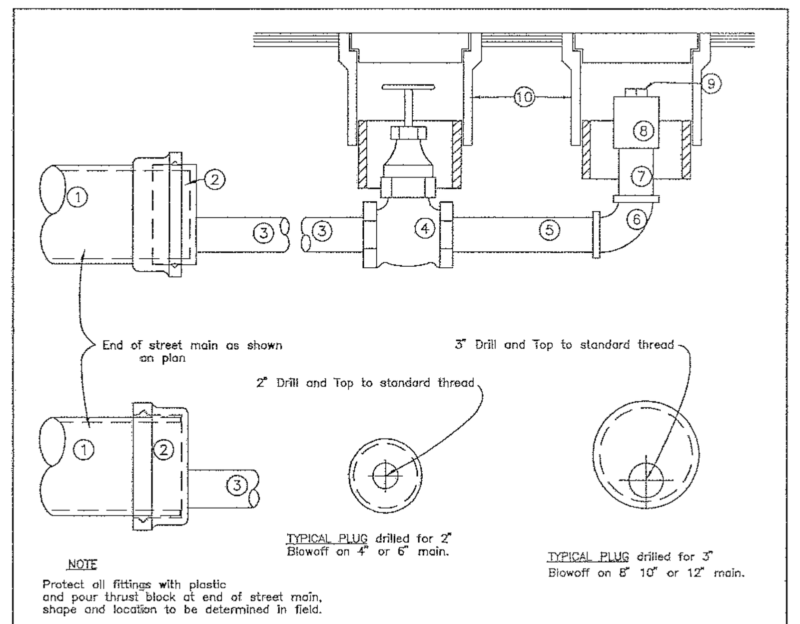

NOTE
Protect all fittings with plastic and pour thrust block at end of street main, shape and location to be determined in field.

SCHEDULE

1.	Water Main	4"	6"	8"	10"	12"
2.	Cast Iron Cap or Plug, M.J.	4"x2"	6"x2"	8"x3"	10"x3"	12"x3"
3.	Brass Nipple	2"x18"	2"x18"	3"x18"	3"x18"	3"x18"
4.	Bronze Gate Valve-Screw JT	2"	2"	3"	3"	3"
5.	Brass Nipple	2"x6"	2"x6"	3"x10"	3"x10"	3"x10"
6.	Brass 90° Ell	2"	2"	3"	3"	3"
7.	Brass Riser	2"x20"±	2"x20"±	3"x32"±	3"x32"±	3"x32"±
8.	Brass Coupling — Threaded	2"	2"	3"	3"	3"
9.	Brass Plug	2"	2"	3"	3"	3"
10.	Christy Valve Box and Cover	G-5	G-5	G-5	G-5	G-5

APPROVED BY CITY ENGINEER — DATE

REVISIONS	BY	APP	DATE
Redrawn To CAD	RMH	MDW	1-95

city of san luis obispo — BLOWOFF ASSEMBLY — May 95 Edition — 6350

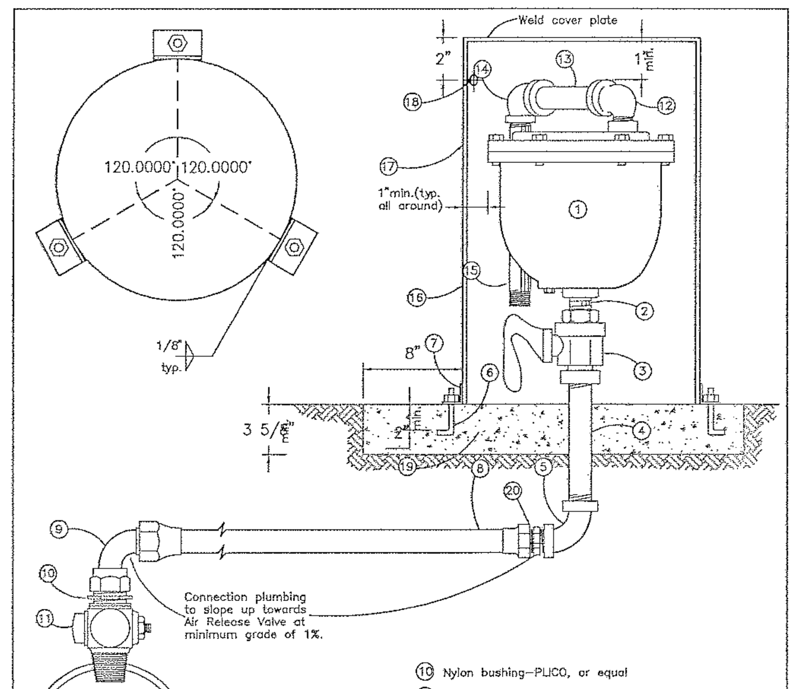

① Air Release Valve-APCO 143C(1") or 145C(2")
② Nipple-brass, short
③ Ball valve-JONES J-1905
④ Nipple-brass, 10"
⑤ Elbow-brass, 90°
⑥ Cadmium plated bent bolts 1/2"φ(typ.3 places)with nuts
⑦ Angle-galv. steel 1 1/2"x1 1/2"x1/4",2"long(typ.3 places)
⑧ Copper tubing-Type K, soft
⑨ Coupling-quarter bend, MUELLER H-15475
⑩ Nylon bushing-PLICO, or equal
⑪ Corporation stop-MUELLER H-15000 or JONES J-1500
⑫ Street elbow-galv.
⑬ Nipple-10" galv.
⑭ Elbow-galv.
⑮ Nipple-10" galv.
⑯ 10 ga. steel, min. wall thickness of tubing
⑰ Paint with zinc-oxide primer and 2 coats of light green enamel
⑱ Drill min. of 6-1/2" dia. holes on circumference evenly spaced
⑲ P.C.C. slab-30"x30"x4" thick
⑳ Coupling, Jones J1531

APPROVED BY CITY ENGINEER — DATE

REVISIONS	BY	APP	DATE
Redrawn To CAD	RMH	MDW	1-95

city of san luis obispo — AIR RELEASE VALVE ASSEMBLY 1" & 2" — May 95 Edition — 6360

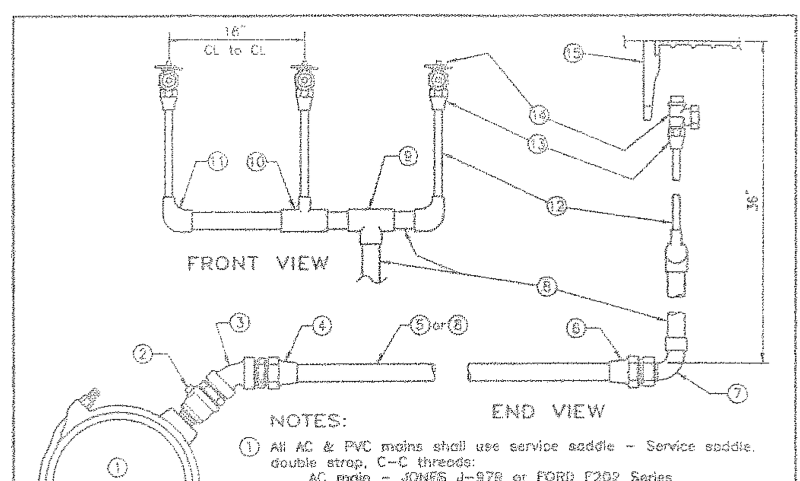

NOTES:
① All AC & PVC mains shall use service saddle — Service saddle, double strap, C-C threads:
AC main — JONES J-979 or FORD F202 Series
PVC main — JONES J-969 or ROCKWELL 393
Service saddles shall be installed per manufacturers recomendations.
② 2" Corp stop, ball valve — JONES J-1944
③ 1/8 bend, brass, FIP x FIP
④ Coupling, MIP x flare — JONES J-1531
⑤ 2" Polyethylene tubing, 200 psi, AWWA C901: WESFLEX GOLD LABEL 3408, DRISCOPIPE, or approved equal.
⑥ Coupling, flare x FIP — JONES J-1535 or FORD C21 Series
⑦ 1/4 bend, MIP x sweat
⑧ 2" Copper tubing, type K, soft
⑨ Copper tee, all sweat — 2" x 2", Service line shall be at or near center of manifold.
⑩ Copper tee, all sweat — 2" x 1"
⑪ Copper reducing ell, sweat x sweat — 2" x 1"
⑫ 1" Copper tubing, type K, soft
⑬ Adaptor, sweat x MIP
⑭ 1" Angle meter stop — JONES J-1527 or FORD FV13 Series
⑮ Each service shall be designated to an address and/or unit by attaching a brass tag to curb stop with a non-ferrous wire. Meter boxes shall be in alphabetical or numerical order with respect to address. See ENGRG. STD. #6210 for meter box installation and meter setting information.
⑯ A tracer wire shall be installed, a 14ga. insulated solid copper wire, tied to corp stop, taped to service line at 6 foot min. intervals, and with 2' — 3' extra length coiled in meter box closest to service line.
⑰ Each service line shall serve no more than 6 meters.

APPROVED BY CITY ENGINEER — DATE

REVISIONS	BY	APP	DATE
Redrawn To CAD	RMH	MDW	6-94
Eliminate Polybutylene	RMH	MDW	3-95

city of san luis obispo — MANIFOLD MULTIPLE WATER SERVICES — May 95 Edition — 6260

R R M D E S I G N G R O U P
RECORD DRAWINGS
VILLAS AT ISLAY CREEK
TRACT 1750 PHASE IV
PLANS PREPARED UNDER THE SUPERVISION OF
(Limited by Business & Professions Code 6735.6(b))

[signature] 7/6/00
GERALD L. MICHAEL R.C.E. 36895 — DATE

R R M D E S I G N G R O U P
Architecture · Planning · Engineering · Surveying · Interiors · Landscape Architecture
3026 South Higuera Street, San Luis Obispo, California 93401 805/543-1794
1012 – 11th Street, Modesto, California 95354 209/544-1794
Vic Montgomery, Architect C011090 · Jerry Michael, RCE 36895, LS 6276 · Jeff Ferber, Landscape Architect 2844

PUBLIC IMPROVEMENT PLANS FOR:
Villas at Islay Creek
TRACT 1750, PHASE 4
DETAIL SHEET

ENGINEER OF RECORD:
REGISTERED PROFESSIONAL ENGINEER — GERALD L. MICHAEL — No. 36895 — Exp. 6/30/00 — CIVIL — STATE OF CALIFORNIA
DATE: 9/5/96

DATE	△	REVISIONS DESCRIPTION	APPROVAL DESIGN ENGR.	APPROVAL CITY
6/00	1	AS-BUILT REVISIONS		

DRAWN BY: MAP — CHECKED BY: TJW — JOB NO. E96806 — SHEET 11 OF 14

11-6-96

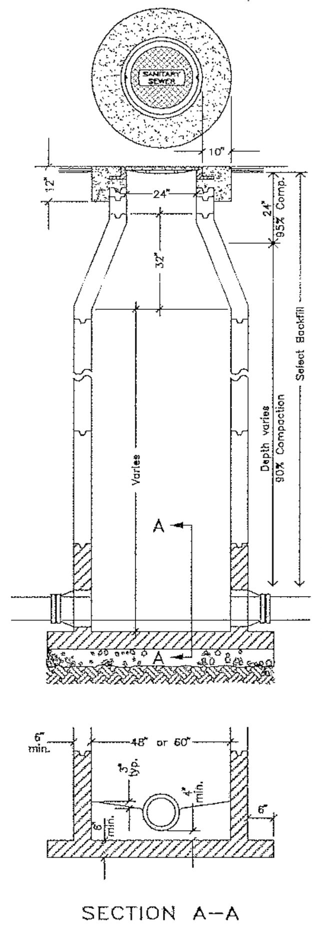

COVER:
Manhole frame and cover shall have a 24" clear opening and a sealed blind pickhole (SBF-1900 or approved equal). The cover shall be lettered "SANITARY SEWER". The inside of the frame shall be grouted with non-shrink grout.

ADJUSTMENT RINGS:
Rings shall be 3" or 6". Top of cone to top of frame shall not exceed 18". Grade rings and manhole frame shall be sealed at every joint with butyl rubber (CONSEAL CS-102 or equal). When proper grade cannot be achieved with standard grade rings, the manhole frame shall be suspended in position over the last grade ring, the inside of the frame and shaft shall be formed with tube or monoform system, and the concrete collar shall be poured to provide the joint between the manhole frame and the grade ring stack. Inside of rings shall be grouted with non-shrink grout.

COLLAR:
Collar shall be constructed per City Engineering Standard #6040.

CONE:
Cone shall be concentric and conform to the requirements for risers. Eccentric cones may be used only in special cases with the prior written approval of the Utilities Engineer.

MANHOLE RISERS:
Manhole risers shall be precast concrete conforming to ASTM C-478, and shall have a 6" min. wall thickness with minimal reinforcements. Manholes shall be 48" in diameter unless the size and/or number of inlet(s) and outlet(s) warrants the use of a 60" diameter manhole.

JOINTS:
Joints shall be set with butyl rubber sealant (RUB-R-NEK). Inside of joints shall be grouted with non-shrink grout.

BASE:
Manhole base shall be precast reinforced Class B concrete with extended base and conform to the requirements for manhole risers. All pipe connections shall be cored to fit flexible connectors (KOR-N-SEAL or equal) either by manufacturer or contractor using approved equipment. The precast base shall be bedded on a minimum of 6" of well graded crushed rock over native material that is either undisturbed or compacted to 95%.

INVERT:
Invert shall be completed in a single pour using Class B concrete with steel trowel finish. Any change in direction shall be a fixed radius curve extending from the inlet wall to the outlet wall. Inside surface of invert and area between pipe connection and channel shall be free from gaps, holes and sharp edges. All inlets shall be designed and installed such that the top of pipe elevations match as much as possible.

TESTING:
The manhole shall be inspected and vacuum-tested prior to placement of backfill, and again after backfill is completed and cover is set at grade. Upon 48 hours notice by contractor, City forces shall prepare the manhole and perform the test as follows:

All inlets to the manhole will be plugged, a test head will be placed in the top of the manhole and a seal inflated to seal off the manhole. A vacuum of 10 inches of mercury will be drawn on the manhole, and a time measured for the vacuum to drop to 9 inches of mercury. The manhole shall pass the test if the time for the vacuum drop meets or exceeds the value (in seconds) from the following table:

Manhole Depth (ft)	Diameter 48"	Diameter 60"
4	10	13
6	15	20
8	20	26
10	25	33
12	30	39
14	35	46
16	40	52
18	45	59
20	50	65

Should the manhole fail the test, it will be the Contractor's responsibility to make whatever repairs are necessary to make the manhole pass the vacuum test.

Crushed Rock Sieve Analysis	
100% Passing	1"
90–100% Passing	3/4"
20–55% Passing	3/8"
0–10% Passing	#4
0–5% Passing	#8

SECTION A–A

APPROVED BY CITY ENGINEER			DATE
REVISIONS	BY	APP	DATE
Change "Collar" Note	RMH	WAP	9-95
Shelf at spring line	BFL	WAP	2-96

City of San Luis Obispo — SEWER MANHOLE — 6610

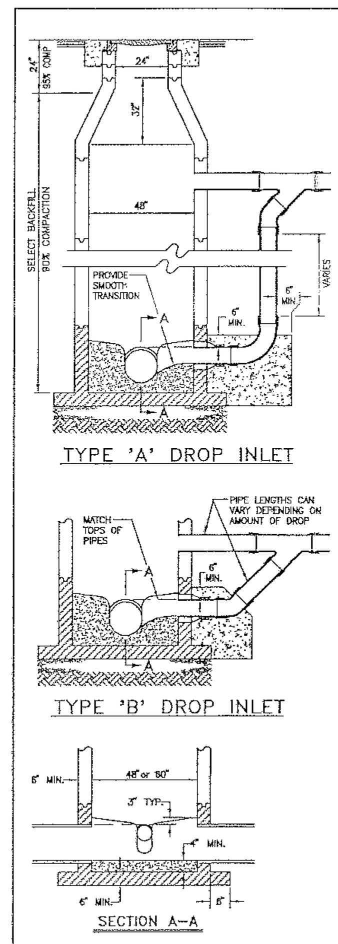

TYPE 'A' DROP INLET

TYPE 'B' DROP INLET

SECTION A–A

COVER:
Manhole frame and cover shall have a 24" clear opening and a sealed blind pickhole (SBF-1900 or approved equal). The cover shall be lettered "SANITARY SEWER". The inside of the frame shall be grouted with non-shrink grout.

ADJUSTMENT RINGS:
Rings shall be 3" or 6". Top of cone to top of frame shall not exceed 18". Grade rings and manhole frame shall be sealed at every joint with butyl rubber (CONSEAL CS-102 or equal). When proper grade cannot be achieved with standard grade rings, the manhole frame shall be suspended in position over the last grade ring, the inside of the frame and shaft shall be formed with tube or monoform system, and the concrete collar shall be poured to provide the joint between the manhole frame and the grade ring stack. Inside of rings shall be grouted with non-shrink grout.

COLLAR:
Collar shall be constructed per City Engineering Standard #6040.

CONE:
Cone shall be concentric and conform to the requirements for risers. Eccentric cones may be used only in special cases with the prior written approval of the Utilities Engineer.

MANHOLE RISERS:
Manhole risers shall be precast concrete conforming to ASTM C-478, and shall have a 6" min. wall thickness with minimal reinforcements. Manholes shall be 48" in diameter unless the size and/or number of inlet(s) and outlet(s) warrants the use of a 60" diameter manhole.

JOINTS:
Joints shall be set with butyl rubber sealant (RUB-R-NEK). Inside of joints shall be grouted with non-shrink grout.

BASE:
Manhole base shall be precast reinforced Class B concrete with extended base and conform to the requirements for manhole risers. All pipe connections shall be cored to fit flexible connectors (KOR-N-SEAL or equal) either by manufacturer or contractor using approved equipment. The precast base shall be bedded on a minimum of 6" of well graded crushed rock over native material that is either undisturbed or compacted to 95%.

INVERT:
Invert shall be completed in a single pour using Class B concrete with steel trowel finish. Any change in direction shall be a fixed radius curve extending from the inlet wall to the outlet wall. Inside surface of invert and area between pipe connection and channel shall be free from gaps, holes and sharp edges. All inlets shall be designed and installed such that the top of pipe elevations match as much as possible.

TESTING:
The manhole shall be inspected and vacuum-tested prior to placement of backfill, and again after backfill is completed and cover is set at grade. Upon 48 hours notice by contractor, City forces shall prepare the manhole and perform the test as follows:

All inlets to the manhole will be plugged, a test head will be placed in the top of the manhole and a seal inflated to seal off the manhole. A vacuum of 10 inches of mercury will be drawn on the manhole, and a time measured for the vacuum to drop to 9 inches of mercury. The manhole shall pass the test if the time for the vacuum drop meets or exceeds the value (in seconds) from the following table:

		MANHOLE DEPTH (ft.)								
		4	6	8	10	12	14	16	18	20
TIME IN SECONDS	48" DIA.	10	15	20	25	30	35	40	45	50
	60" DIA.	13	20	26	33	39	46	52	59	65

Should the manhole fail the test, it will be the Contractor's responsibility to make whatever repairs are necessary to make the manhole pass the vacuum test.

Crushed Rock Sieve Analysis	
100% Passing	1"
90–100% Passing	3/4"
20–55% Passing	3/8"
0–10% Passing	#4
0–5% Passing	#8

TYPE "B" SHALL BE USED ONLY WHEN AMOUNT OF DROP IS TO LITTLE FOR TYPE "A"

APPROVED BY CITY ENGINEER			DATE
REVISIONS	BY	APP	DATE
Concentric Cone, Notes	RMH	WAP	7-95
Change "Collar" Note	RMH	WAP	9-95

City of San Luis Obispo — SEWER DROP MANHOLE — 6620

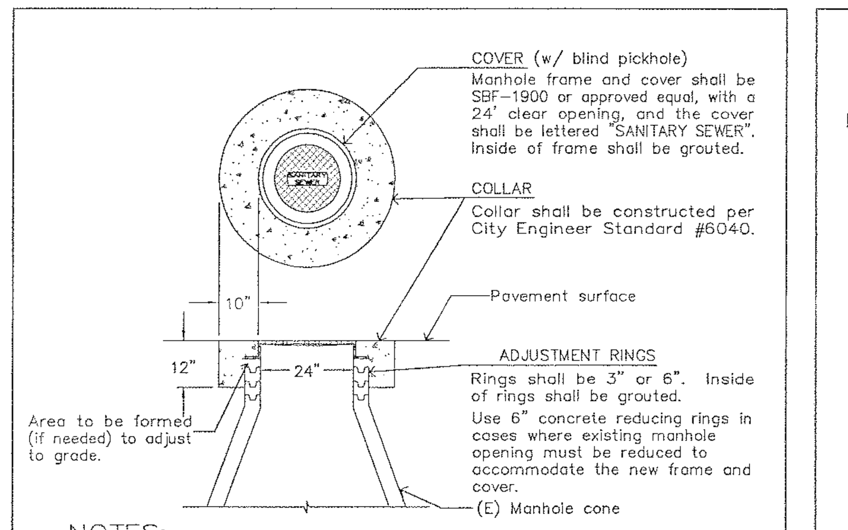

NOTES:

- Inside surface of manholes shall be grouted to obtain a smooth surface free from gaps, holes and sharp edges.
- Use 3" or 6" adjustment rings as needed to adjust size and to adjust manhole frame and lid to new street surface.
- Completely remove existing concrete collar prior to pouring new concrete collar. The diameter of the new collar shall be equal to the existing collar or the minimum diameter specified in the above detail, whichever is larger. See City Engineering Standard #6040.
- Grade rings shall be sealed at every joint with butyl rubber, (RUB-R-NEK, CONSEAL CS-101, or equal). If grade cannot be obtained to the existing surface with a standard grade ring and rubber sealant, the manhole frame shall be suspended in position over the last grade ring, the inside of the frame and shaft shall be formed with sonotube or monoform system, and the concrete collar shall be poured to provide the joint between the manhole frame and the grade ring stack. The inside of the rings shall be grouted with non-shrink grout.

APPROVED BY CITY ENGINEER			DATE
REVISIONS	BY	APP	DATE
New Standard	RMH	MDW	10-93
Change "Collar" Notes	RMH	WAP	9-96

City of San Luis Obispo — SEWER MANHOLE ADJUSTMENT — 6630

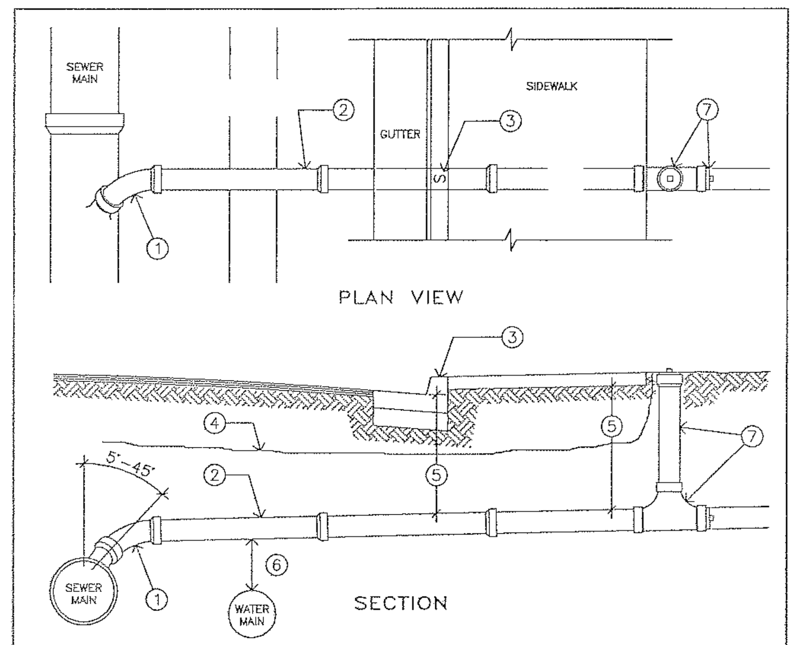

PLAN VIEW

SECTION

NOTES:

1. Factory-fabricated wye in sewer main, with 1/8 bend. Bend shall point downstream and enter main at a vertical angle of not less than 5° nor more than 45°.
2. Sewer lateral pipe and fittings shall be Schedule 40 ABS, SDR 35 PVC, or Class 150 cast iron waterline, with a minimum diameter of 4", and a minimum slope of 1/4" per foot. Lateral installation shall begin at main and proceed to cleanout. Grade shall be uniform from main to property line. Changes in grade of lateral shall be made using long-radius bends. Cement or hot-pour joints will not be permitted.
3. Top of curb shall be marked with an "S" directly over lateral. The "S" shall be stamped in new concrete or chiseled into existing concrete, and shall not be less than 3" long, 2" wide and 3/16" deep.
4. When non-metallic pipe is used, magnetic tracer tape shall be placed in trench over lateral from sewer main to cleanout at a depth of 24"–32", and then up to surface.
5. Depth of lateral shall not be less than 36" from top of pipe unless constructed of cast iron waterline or encased in concrete. Maximum depth at gutterline shall be 60" when terrain is flat.
6. A minimum separation of 18" shall be maintained when crossing waterlines.
7. Cleanout shall consist of two-way cleanout tee, riser, and fitting cleanout with plug. Tee shall be plugged at night during construction and left plugged when backfilled, if not tied to user.

THE ABOVE REQUIREMENTS MAY BE MODIFIED OR WAIVED ONLY WITH THE APPROVAL OF THE UTILITIES ENGINEER.

APPROVED BY CITY ENGINEER			DATE
REVISIONS	BY	APP	DATE
Notes, CO, watermain	MDW	JWH	1-91

City of San Luis Obispo — SEWER LATERAL — May 95 Edition — 6810

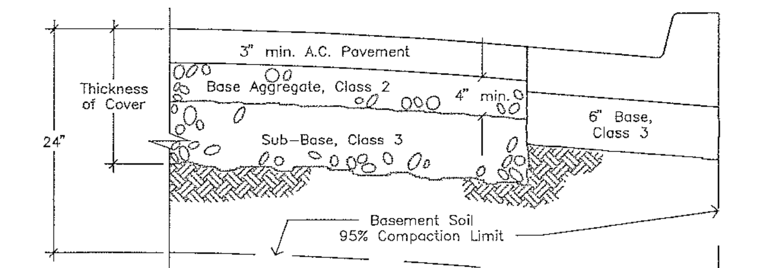

GENERAL NOTES:

A. Total thickness of cover depends on R-value of basement soil. All street sections shall be designed by traffic index (T.I.). Base thickness requirements shall be determined by traffic index (Class 2: 4" min.). Deep-lift design is an acceptable alternate.

B. Pavement shall be designed for a 20-year life and shall be based on the traffic indexes shown below.

C. For paving in new subdivisions that is placed prior to construction of building, pavement thickness shall be increased from that which is derived from normal T.I. and R-value calculations by either:

a. 1/2" if total section is placed prior to building construction.

b. 1" if pavement construction is phased.

THE FOLLOWING IS AN EXAMPLE USING AN R-VALUE OF 5:

STREET CLASSIFICATION	* T.I.	STREET SECTION THICKNESS IN INCHES									
		EXISTING BUILDINGS			UNPHASED CONST.			PHASED CONSTRUCTION			
		AC	BASE	SUBBASE	AC	BASE	SUBBASE	FINISH	AC	BASE	SUBBASE
RESIDENTIAL MINOR	5.5	3	5	8	3.5	5	8	1.5	2.5	5	8
RESIDENTIAL COLLECTOR	7.0	4	7	10	4.5	7	10	1.5	3.5	7	10
INDUSTRIAL COMMERCIAL ARTERIAL	8.0	4.5	8	12	5	8	12	1.5	4	8	12

In general, the traffic associated with on-site construction and minor grading can be accommodated by adding 1/2 inch to the AC in the street section. For phased construction, an inch of AC needs to be added to the total section. The first construction should place an AC thickness 1/2 inch less than the section called for by the required T.I., and then a finish layer of 1-1/2 inches is to be placed before the project is completed. Sections using other R-values shall be calculated similarly adding 1/2 inch and 1 inch, respectively, for unphased and phased pavement construction.

New streets and major widenings shall have a prime coat, and shall have a fog seal applied to all streets no more than 60 days prior to request for final acceptance by the City.

Variation of these design standards may be approved by the City Engineer to meet individual circumstances.

* ADOPTED BY ORDINANCE No. 1111 (1988 Series)

APPROVED BY CITY ENGINEER			DATE
REVISIONS	BY	APP	DATE
Notes	RMH	MDW	1-96

City of San Luis Obispo — FLEXIBLE PAVEMENT ELEMENTS — May 95 Edition — 7110

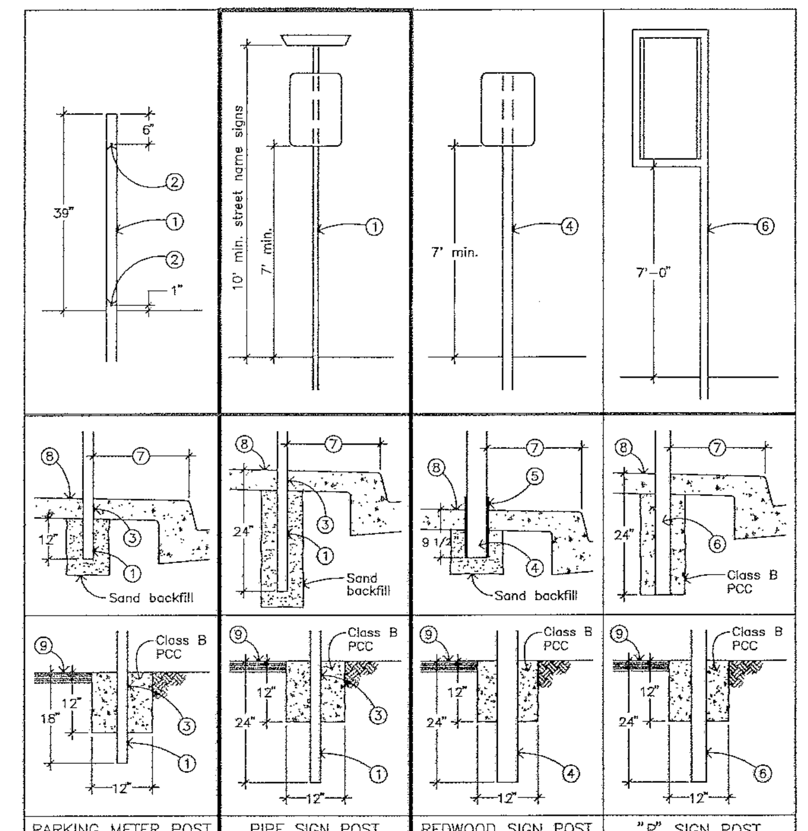

PARKING METER POST — PIPE SIGN POST — REDWOOD SIGN POST — "P" SIGN POST

1. 2" galvanized steel pipe
2. Drain hole, 1/4" diameter, on one side only.
3. #4 rebar, 2" long, welded to pipe 10" from bottom.
4. 4"x4" redwood post, construction heart
5. Install sidewalk sleeve, see CITY STANDARD #7230.
6. 3"x3" square steel tubing, see CITY STANDARD #7220.
7. 18" standard setback. 18" if sign is 18" or less in width. 22" if sign is more than 18" wide, except "P" sign. 22" if post is in Mission Tile sidewalk.
8. When sign or parking meter is to be located in sidewalk see CITY STANDARD #7410 for "clear zone" restrictions.
9. Paved or unpaved area.

APPROVED BY CITY ENGINEER			DATE
REVISIONS	BY	APP	DATE
Std. Ref. No. Changes	RMH	WAP	7-95
St. Name Sign	RMH	MDW	1-96

City of San Luis Obispo — SIGNS & PARKING METER POSTS — 7210

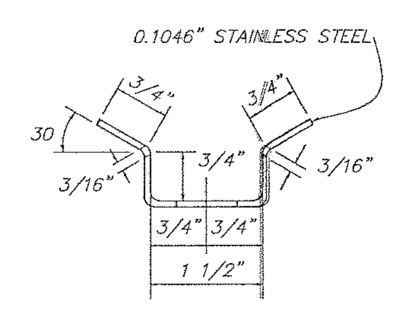

SADDLE BRACKET

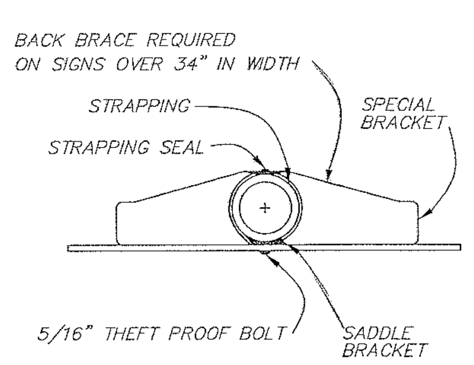

SINGLE SIGN

SIGN INSTALLATION ON EXISTING POLE

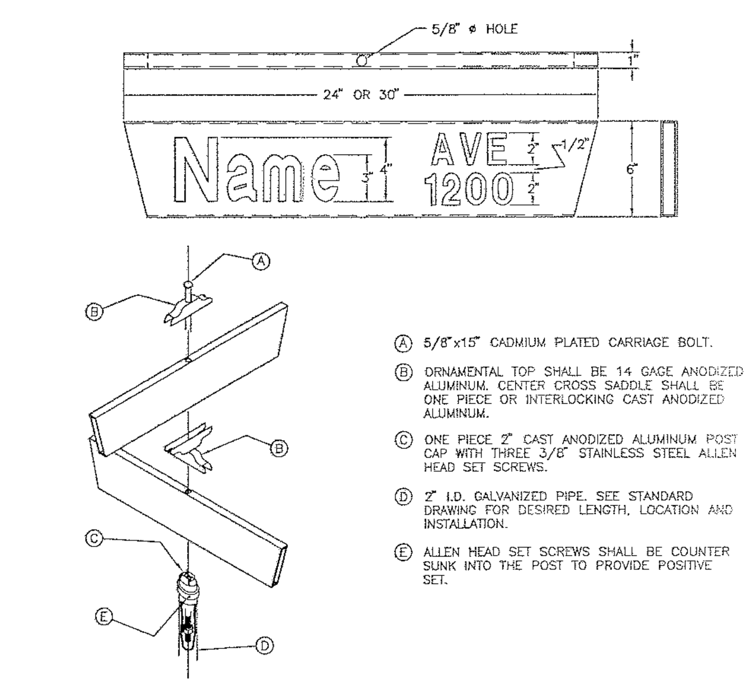

ASSEMBLY

(A) 5/8"x15" CADMIUM PLATED CARRIAGE BOLT.

(B) ORNAMENTAL TOP SHALL BE 14 GAGE ANODIZED ALUMINUM. CENTER CROSS SADDLE SHALL BE ONE PIECE OR INTERLOCKING CAST ANODIZED ALUMINUM.

(C) ONE PIECE 2" CAST ANODIZED ALUMINUM POST CAP WITH THREE 3/8" STAINLESS STEEL ALLEN HEAD SET SCREWS.

(D) 2" I.D. GALVANIZED PIPE. SEE STANDARD DRAWING FOR DESIRED LENGTH, LOCATION AND INSTALLATION.

(E) ALLEN HEAD SET SCREWS SHALL BE COUNTER SUNK INTO THE POST TO PROVIDE POSITIVE SET.

NOTES

1. EACH FOUR-WAY UNIT SHALL CONSIST OF TWO DOUBLE FACE SIGNS MOUNTED AT RIGHT ANGLES WITH ONE ANOTHER, ASSEMBLED AS SHOWN.
2. SIGN SHALL BE GREEN-ANODIZED ALUMINUM EXTRUSION OF 6063T-4 ALLOY MATERIAL. ALL ANODIZING SHALL CONFORM WITH ALUMILITE SPECIFICATION #215-R1.
3. SIGN FACES SHALL BE BROWN HIGH-INTENSITY REFLECTIVE SHEETING, WITH WHITE LETTERING APPLIED IN ACCORDANCE WITH MANUFACTURER'S SPECIFICATIONS.
4. USE 3" LOWER CASE LETTERING AFTER FIRST LETTER OF WORD.
5. REFLECTIVE SHEETING SHALL CONFORM TO CALIFORNIA DEPARTMENT OF TRANSPORTATION SPECIFICATIONS.

APPROVED BY CITY ENGINEER			DATE
REVISIONS	BY	APP	DATE
New Standard	RMH	MDW	2-96

City of San Luis Obispo — STREET NAME SIGN — May 95 Edition — 7240

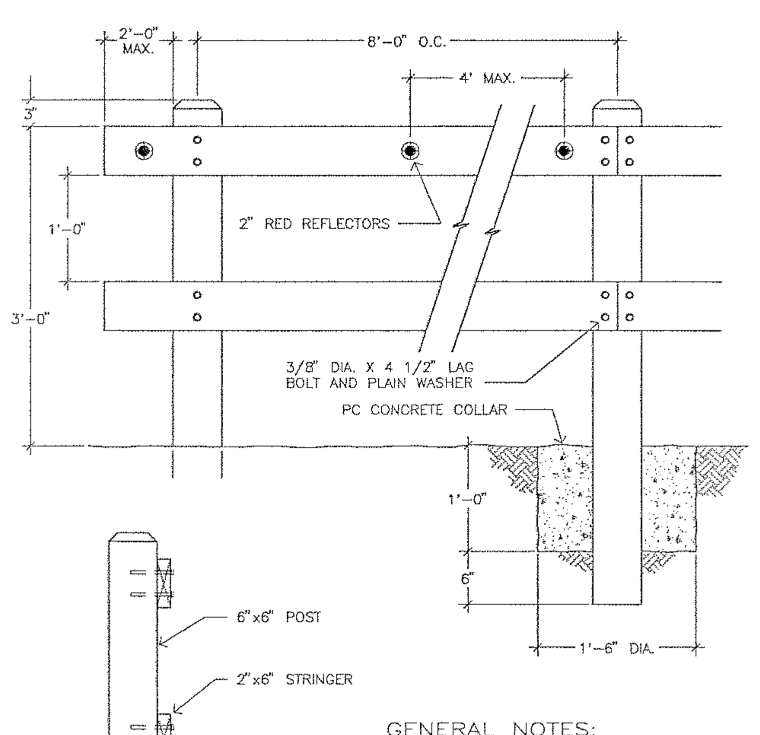

GENERAL NOTES:

A. All lumber shall be Douglas Fir, surfaced four sides. (DFS4S)

B. All lumber shall be painted white as per CalTrans Specifications.

C. Treat portion of post below ground as per CalTrans Specifications.

APPROVED BY CITY ENGINEER			DATE
REVISIONS	BY	APP	DATE
Add Note C	JDL	MDW	10-93
Redrawn to CAD	JDL	MDW	10-93

City of San Luis Obispo — STREET BARRICADE — May 95 Edition — 7330

SEWER LATERAL
TECHNICAL SPECIFICATION – FLEXIBLE SADDLE

DFW's Flexible Saddle shall be a molded unit consisting of an insert surrounded by Elastomeric Polyvinyl Chloride (PVC). The PVC material is unaffected by soil conditions and resistant to chemicals, ultraviolet rays, and normal sewer gases.

The material specification shall be as follows on the elastomeric PVC:

TEST	VALUE	ASTM METHOD
Chemical Resistance –IN sulfuric acid –IN hydrochloric acid	No weight loss	D543
Tensile Strength Elongation	1000 psi (7/Mpa) min. 300% minimum	D412, Die "C"
Durometer Hardness	Shore durometer 50 min. to 75 max.	D2240
Compression Set	30% max. of original deflection	D395, Method B Type 2
Water Absorption	5% max.	D471
Ozone Resistance	No visible cracking under 7%	D1149, D518 Method A
Oven Aging	75% min. of original tensile strength; 65% min. of original elongation	D573
Cold Brittleness	Cold brittleness was determined to be –43C	D476
Tear Strength	125 lbs/in.	D624 die "C"
Fungicide	Must not promote growth of fungus or bacteria	

Each flexible saddle shall be supplied with corrosion resistant series 300 stainless steel clamps, which when tightened to 60 inch pounds torque, seal the joint.

The material specifications shall be as follows on the stainless steel clamps:

Strap Material – .526S X .023 x .023 x Coil #301, #2 Finish, #3 Edge, Tensile Strength to be 170,000 to 190,000 psi yield 130,000 min. elongation 8%, min. Rockwell 30N55 to 61 1/2, thickness tolerance ±.001.

Screw Housing/Clip Material – 1.0625 X .043 X Coil #301 dead soft #1B finish, #3 edge. Max. hardness B75 thickness tolerance + .003/–.001, width tolerance ± .005.

Screw Material – 304 stainless steel.

All other units must be equal to the DFW/HPI Flexible Saddle specification

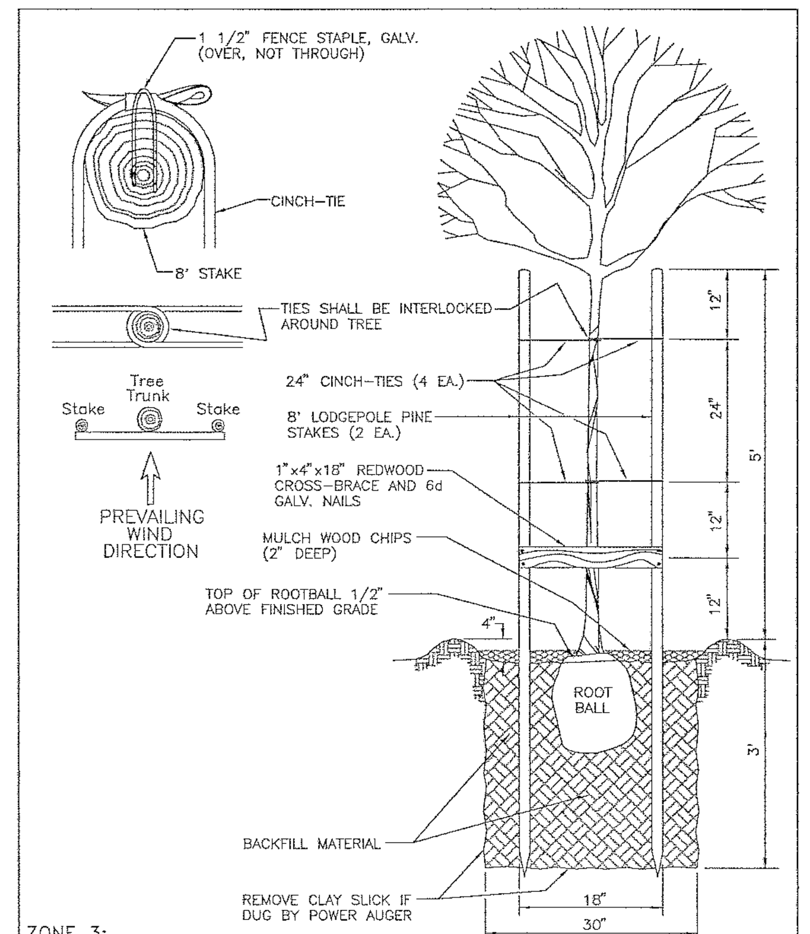

ZONE 3:
TREES PLANTED MORE THAN 7 1/2' FROM CURB, SIDEWALK, OR PAVING

APPROVED BY CITY ENGINEER			DATE
REVISIONS	BY	APP	DATE
Add Zone 3	RMH	MDW	1-95
Redrawn To CAD	RMH	MDW	1-95

City of San Luis Obispo — TREE PLANTING & STAKING ZONE 3 15 GALLON SIZE — May 95 Edition — 8240

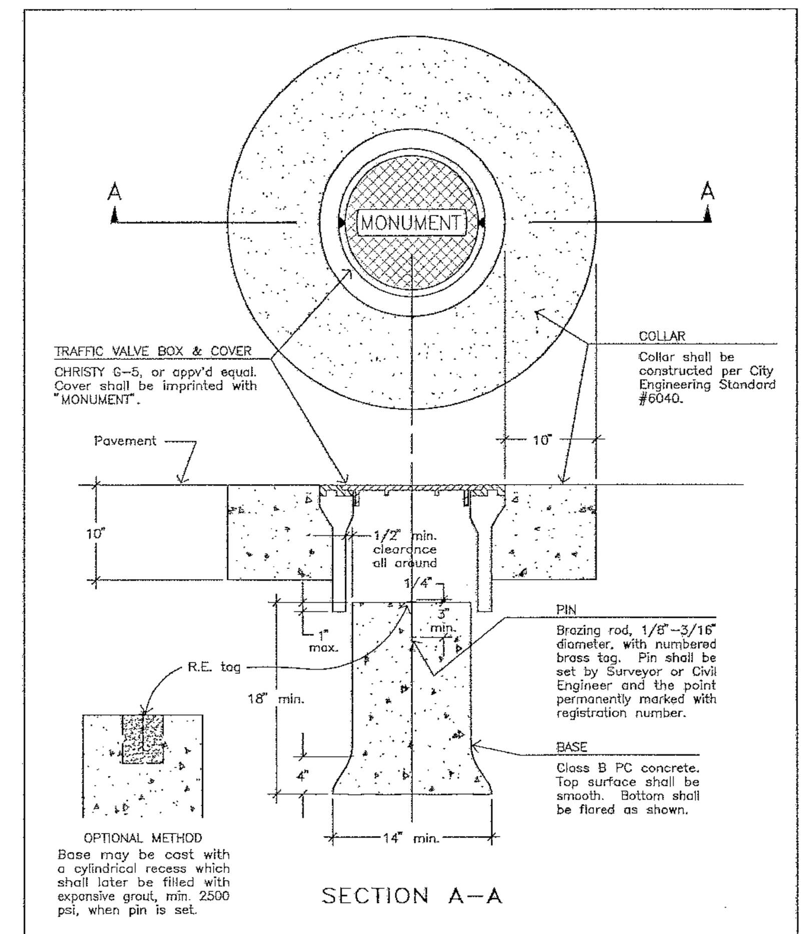

SECTION A–A

APPROVED BY CITY ENGINEER			DATE
REVISIONS	BY	APP	DATE
Change "Collar" Note	RMH	WAP	9-95
Redrawn to CAD	JDL	MDW	10-93

City of San Luis Obispo — MONUMENT & WELL — 9020

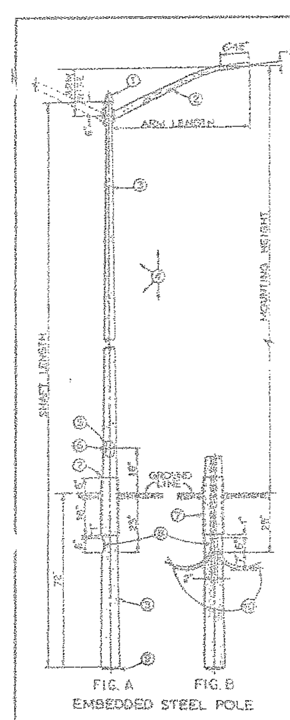

FIG. A — FIG. B
EMBEDDED STEEL POLE

EMBEDDED STEEL POLE

1. CAP – CAST IRON OR STEEL, ATTACHED WITH SET SCREWS.
2. ARM – FORMED CYLINDRICAL OF 11 ga. STEEL, 33,000 psi YIELD STRENGTH, WITH A TAPER OF 0.14 INCH PER FOOT, SMALL END O.D. OF 2.37 INCHES, AND LARGE END OVALIZED TO A WIDTH OF ABOUT 3.5 INCHES TO MATE WITH WELDED-ON ATTACHMENT PLATE.
3. POLE – FORMED CYLINDRICAL OF 11 ga. STEEL, 33,000 psi YIELD STRENGTH, WITH A TAPER OF 0.14 INCH PER FOOT.
4. ALL PARTS – SHALL BE COATED: ARM(S) SHALL BE GALVANIZED PER ASTM A123 AFTER FORMED AND WELDED. ALL REMOVABLE PARTS SHALL BE GALVANIZED PER ASTM A153. POLE SHALL BE GALVANIZED PER ASTM A123 AFTER THE HOLES ARE CUT AND ITEMS (5)(6)(7)(8) AND ARM FIXTURE(S) HAVE BEEN WELDED ON.
5. HANDHOLE – AN OBLONG HOLE, 4"x 6½", WITH A WELDED-ON REINFORCING FRAME, COVER, AND MOUNTING HARDWARE.
6. WELDNUT – A ½" SQUARE GROUNDING NUT, OR NUT HOLDER, WELDED TO INSIDE OF POLE, JUST OPPOSITE OF HANDHOLE.
7. GROUND LINE SLEEVE – CYLINDRICAL STEEL SLEEVE, 11 ga., CONTINUOUSLY SEAL-WELDED (BOTH ENDS) TO THE POLE.
8. CABLE ENTRANCE – OVAL SLOT, 2"x 6", AND 180° FROM LUMINAIRE (SEE FIGURES A & B).
9. BUTT PLATE – PLATE, OR ANGLE STEEL, ¼" THICK, 12" LONG, AND 4"–5" WIDE, SEAL-WELDED CONTINUOUSLY AT BOTH EDGES AT BOTTOM OF POLE.
10. CONDUCTORS – 2 ea. No. 6 ALUMINUM – C.I.C.

PROTECTIVE TUBES

[illegible]

GENERAL NOTES

[illegible]

FIG. C

[illegible]

APPROVED BY THE CITY ENGINEER			DATE
REVISIONS	BY	APP	DATE
Notes 1, 2, 3	MDW	WAP	12-89

City of San Luis Obispo — STREET LIGHTING — May 95 Edition — 7910

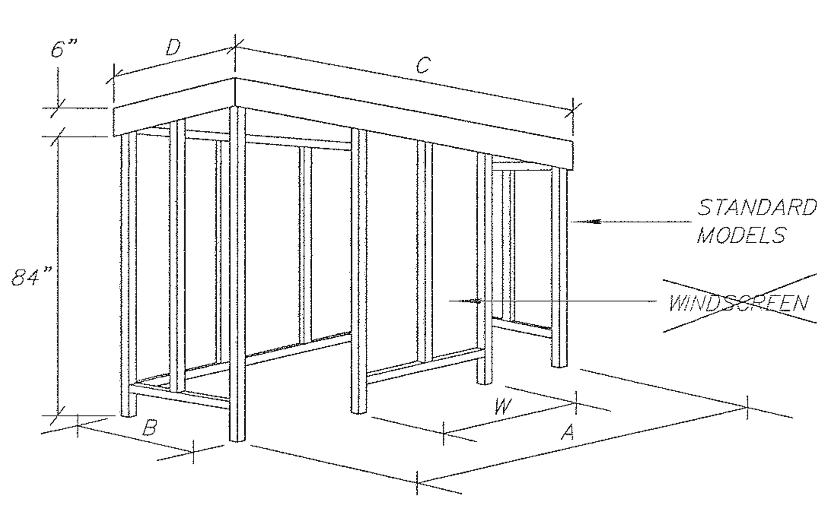

MODEL #	A	B	C	D
3x2s–GL217	92"	62.5"	95.5"	66"

* SPLIT BENCH REQUIRED

* WINDSCREEN NOT REQUIRED

TRANSIT SHELTER

–nts–

R R M D E S I G N G R O U P
RECORD DRAWINGS
VILLAS AT ISLAY CREEK
TRACT 1750 PHASE IV
PLANS PREPARED UNDER THE SUPERVISION OF
(Limited by Business & Professions Code 6735.6(b))

GERALD L. MICHAEL R.C.E. 36895 — 7/6/00 DATE

R R M D E S I G N G R O U P
Architecture · Planning · Engineering · Surveying · Interiors · Landscape Architecture
3026 South Higuera Street, San Luis Obispo, California 93401 805/543-1794
1012 – 11th Street, Modesto, California 95354 209/544-1794
Vic Montgomery, Architect C011090 · Jerry Michael, RCE 36895, LS 6276 · Jeff Ferber, Landscape Architect 2844

PUBLIC IMPROVEMENT PLANS FOR:
Villas at Islay Creek
TRACT 1750, PHASE 4
DETAIL SHEET

ENGINEER OF RECORD:
REGISTERED PROFESSIONAL ENGINEER — GERALD L. MICHAEL — No. 36895 — exp. 6/30/00 — CIVIL — STATE OF CALIFORNIA
DATE: 9/5/96

DATE	△	REVISIONS DESCRIPTION	APPROVAL DESIGN ENGR.	CITY
6/00	1	AS-BUILT REVISIONS		

DRAWN BY:	CHECKED BY:	JOB NO.	SHEET
MAP	TJW	E96806	12 OF 14

11-6-96

CONSTRUCTION CONTRACTOR AGREES THAT IN ACCORDANCE WITH GENERALLY ACCEPTED CONSTRUCTION PRACTICES, CONSTRUCTION CONTRACTOR WILL BE REQUIRED TO ASSUME SOLE AND COMPLETE RESPONSIBILITY FOR JOB SITE CONDITIONS DURING THE COURSE OF CONSTRUCTION OF THE PROJECT, INCLUDING SAFETY OF ALL PERSONS AND PROPERTY; THAT THIS REQUIREMENT SHALL BE MADE TO APPLY CONTINUOUSLY AND NOT BE LIMITED TO NORMAL WORKING HOURS, AND CONSTRUCTION CONTRACTOR FURTHER AGREES TO DEFEND, INDEMNIFY AND HOLD DESIGN PROFESSIONAL HARMLESS FROM ANY AND ALL LIABILITY, REAL OR ALLEGED IN CONNECTION WITH THE PERFORMANCE OF WORK ON THIS PROJECT, EXCEPTING LIABILITY ARISING FROM THE SOLE NEGLIGENCE OF DESIGN PROFESSIONAL.

UNAUTHORIZED CHANGES & USES: THE ENGINEER PREPARING THESE PLANS WILL NOT BE RESPONSIBLE FOR, OR LIABLE FOR, UNAUTHORIZED CHANGES TO OR USES OF THESE PLANS. ALL CHANGES TO THE PLANS MUST BE IN WRITING AND MUST BE APPROVED BY THE PREPARER OF THESE PLANS.

ADDITIONAL SILT FENCING OR CLOSER SPACING OF FENCING MAY BE REQUIRED PER THE DIRECTION & TO THE APPROVAL OF THE CITY INSPECTOR.

R R M D E S I G N G R O U P
RECORD DRAWINGS
VILLAS AT ISLAY CREEK
TRACT 1750 PHASE IV
PLANS PREPARED UNDER THE SUPERVISION OF
(Limited by Business & Professions Code 6735.6(b))

GERALD L. MICHAEL R.C.E. 36895 DATE 7/6/00

SILT-LOK

PRE-ASSEMBLED SILT FENCE

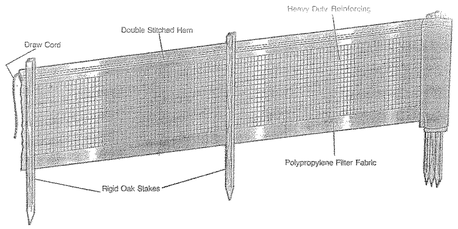

Silt-Lok® is a ready to use silt fence package which is complete with UV stabilized filter fabric, high strength polypropylene netting for structural reinforcement, and pre-attached rigid oak posts for quick, easy installation.

AVAILABLE SIZES:

SILT-LOK® 36-100: Thirty six inches high by one hundred feet in length. Fourteen oak posts fifty two inches in length. 42 lbs.

SILT-LOK® 24-100: Twenty four inches high by one hundred feet in length. Fourteen oak posts thirty six inches in length. 32 lbs.

ADVANTAGES

- Heavy Duty
- Ease of Installation
- Economical
- High Efficiency
- Durable
- Readily Available

See reverse side for physical properties of filter fabric.

INSTALLATION PROCEDURES:

- Dig a 6" x 6" trench at desired fence location.
- Unroll SILT-LOK® fence along trench.
- Drive stakes into the down hill side of trench with netting and stakes facing the down hill side.
- Lay the bottom 6" of fabric into the trench and fill with soil for proper toe-in.
- Draw tension cord at top of fence and tie to end stakes.

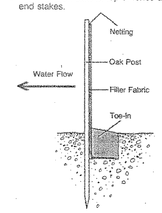

JOINING FENCES

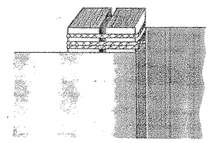

Offset fences as shown and tie end posts together with draw cord.

EROSION CONTROL NOTES

All disturbed surfaces resulting from grading operations shall be prepared and maintained to control erosion.

1. SEEDING

All slopes greater than 2% shall be hydro-mulched consisting of the following mix per acre:

20 lbs.	–	*Annual Rye (40%)*
17.5 lbs.	–	*Blando Brome ((35%)*
7.5 lbs.	–	*Crimson Clover or Rose Clover (15%) (with nitrogen fixing inoculants)*
5 lbs.	–	*Calif. Native wildflowers (10%)*
10-- lbs.	–	*M-Binder (Az-tac or equal)*
320 lbs.	–	*Fertilizer 14-14-7*
2,000 lbs.	–	*Fiber mulch*

Other seed mixes shall be approved by the Community Development Director.

From October 15 to April 15 this control shall be installed as soon as practical after grading each section but no later than 5 working days after completing each section. Landscape plants on slopes greater than 4 to 1 must have an erosion control mat or be over-seeded with 50 lbs. per acre annual rye grass.

Temporary irrigation systems may be required by the City to establish erosion control plantings. Irrigation systems shall be approved by the Community Development Director.

2. OTHER DEVICES

Where necessary, silt dams, control netting, Geomatrix systems, sedimentation basins, cribbing, rip-rap, plastic sheeting, curbs, headerboards, or other devices or methods shall be employed to trap silt, control erosion and provide safety.

All devices or methods shall be approved by the City Engineer.

Erosion control devices shall be the first order of work and be installed as soon as practical.

All temporary construction banks greater than 2 to 1 shall be protected by nylon mesh reinforced Visqueen, anchored at the top in a 6" backfill trench.

All erosion control mats shall be anchored to soil surface with wire landscape anchors at 24" on center all directions. Anchor edges and overlaps at 12" intervals 3" in from edges.

Jute netting shall be heavy mesh 1" X 1" spacing.

Filter fabric shall be 24" high, held in place with 48" steel or wood stakes at 5' on center, reinforced by nylon or steel netting. Fabric shall be anchored in a 6? backfill trench.

Erosion control devices shall be in place from October 15 to April 15, except for entrances and exits which shall be in place each night and on weekends.

All permanent erosion control devices required on the plans shall be installed before final inspection is given.

R R M D E S I G N G R O U P
Architecture · Planning · Engineering · Surveying · Interiors · Landscape Architecture
3620 South Higuera Street, San Luis Obispo, California 93401 805/543-1794
1012 - 11th Street, Modesto, California 95354 209/544-1796
Vic Montgomery, Architect C011080 - Jerry Michael, RCE 36895, LS 6276 - Jeff Farber, Landscape Architect 2844

PUBLIC IMPROVEMENT PLANS FOR:
Villas at Islay Creek
TRACT 1750, PHASE 4
EROSION CONTROL PLAN

ENGINEER OF RECORD:
REGISTERED PROFESSIONAL ENGINEER GERALD L. MICHAEL No. R36895 Exp. 6/30/00 CIVIL STATE OF CALIFORNIA
DATE: 7/6/00

DATE	△	REVISIONS DESCRIPTION	APPROVAL DESIGN ENGR.	APPROVAL CITY
6/00	1	AS-BUILT REVISIONS		

DRAWN BY: MAP | CHECKED BY: TJW | JOB NO. E96806 | SHEET 13 OF 14

11-6-96

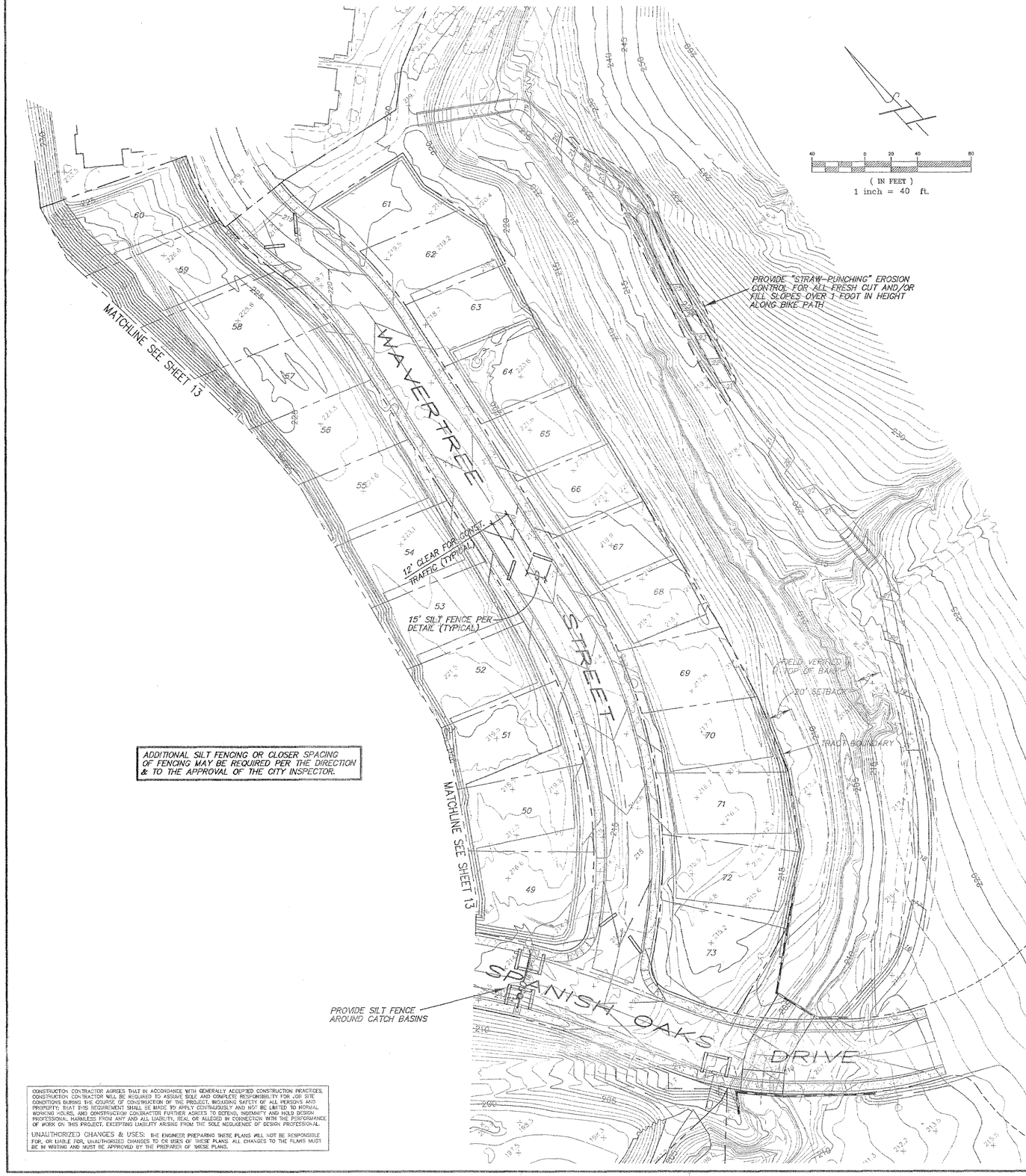

ADDITIONAL SILT FENCING OR CLOSER SPACING OF FENCING MAY BE REQUIRED PER THE DIRECTION & TO THE APPROVAL OF THE CITY INSPECTOR.

CONSTRUCTION CONTRACTOR AGREES THAT IN ACCORDANCE WITH GENERALLY ACCEPTED CONSTRUCTION PRACTICES, CONSTRUCTION CONTRACTOR WILL BE REQUIRED TO ASSUME SOLE AND COMPLETE RESPONSIBILITY FOR JOB SITE CONDITIONS DURING THE COURSE OF CONSTRUCTION OF THE PROJECT, INCLUDING SAFETY OF ALL PERSONS AND PROPERTY; THAT THIS REQUIREMENT SHALL BE MADE TO APPLY CONTINUOUSLY AND NOT BE LIMITED TO NORMAL WORKING HOURS, AND CONSTRUCTION CONTRACTOR FURTHER AGREES TO DEFEND, INDEMNIFY AND HOLD DESIGN PROFESSIONAL HARMLESS FROM ANY AND ALL LIABILITY, REAL OR ALLEGED IN CONNECTION WITH THE PERFORMANCE OF WORK ON THIS PROJECT, EXCEPTING LIABILITY ARISING FROM THE SOLE NEGLIGENCE OF DESIGN PROFESSIONAL.

UNAUTHORIZED CHANGES & USES: THE ENGINEER PREPARING THESE PLANS WILL NOT BE RESPONSIBLE FOR, OR LIABLE FOR, UNAUTHORIZED CHANGES TO OR USES OF THESE PLANS. ALL CHANGES TO THE PLANS MUST BE IN WRITING AND MUST BE APPROVED BY THE PREPARER OF THESE PLANS.

SILT-LOK

PRE-ASSEMBLED SILT FENCE

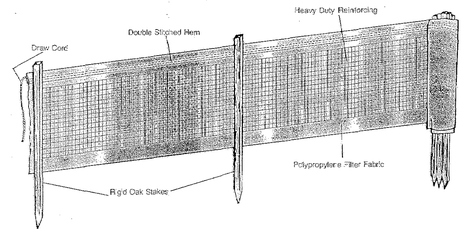

Silt-Lok® is a ready to use silt fence package which is complete with UV stabilized filter fabric, high strength polypropylene netting for structural reinforcement, end pre-attached rigid oak posts for quick, easy installation.

AVAILABLE SIZES:

SILT-LOK® 36-100: Thirty six inches high by one hundred feet in length. Fourteen oak posts fifty two inches in length. 42 lbs.

SILT-LOK® 24-100: Twenty four inches high by one hundred feet in length. Fourteen oak posts thirty six inches in length. 32 lbs.

ADVANTAGES

- Heavy Duty
- Ease of Installation
- Economical
- High Efficiency
- Durable
- Readily Available

See reverse side for physical properties of filter fabric.

INSTALLATION PROCEDURES:

- Dig a 6" x 6" trench at desired fence location.
- Unroll SILT-LOK® fence along trench.
- Drive stakes into the down hill side of trench with netting and stakes facing the down hill side.
- Lay the bottom 6" of fabric into the trench and fill with soil for proper toe-in.
- Draw tension cord at top of fence and tie to end stakes.

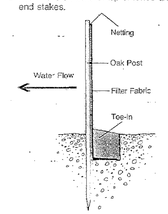

JOINING FENCES

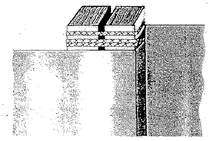

Offset fences as shown and tie end posts together with draw cord.

EROSION CONTROL NOTES

All disturbed surfaces resulting from grading operations shall be prepared and maintained to control erosion.

1. SEEDING

All slopes greater than 2% shall be hydro-mulched consisting of the following mix per acre:

20 lbs.	–	*Annual Rye (40%)*
17.5 lbs.	–	*Blando Brome (35%)*
7.5 lbs.	–	*Crimson Clover or Rose Clover (15%) (with nitrogen fixing inoculants)*
5 lbs.	–	*Calif. Native wildflowers (10%)*
10– lbs.	–	*M–Binder (Az–tac or equal)*
320 lbs.	–	*Fertilizer 14–14–7*
2,000 lbs.	–	*Fiber mulch*

Other seed mixes shall be approved by the Community Development Director.

From October 15 to April 15 this control shall be installed as soon as practical after grading each section but no later than 5 working days after completing each section. Landscape plants on slopes greater than 4 to 1 must have an erosion control mat or be over–seeded with 50 lbs. per acre annual rye grass.

Temporary irrigation systems may be required by the City to establish erosion control plantings. Irrigation systems shall be approved by the Community Development Director.

2. OTHER DEVICES

Where necessary, silt dams, control netting, Geomatrix systems, sedimentation basins, cribbing, rip–rap, plastic sheeting, curbs, headerboards, or other devices or methods shall be employed to trap silt, control erosion and provide safety.

All devices or methods shall be approved by the City Engineer.

Erosion control devices shall be the first order of work and be installed as soon as practical.

All temporary construction banks greater than 2 to 1 shall be protected by nylon mesh reinforced Visqueen, anchored at the top in a 6" backfill trench.

All erosion control mats shall be anchored to soil surface with wire landscape anchors at 24" on center all directions. Anchor edges and overlaps at 12" intervals 3" in from edges.

Jute netting shall be heavy mesh 1" X 1" spacing.

Filter fabric shall be 24" high, held in place with 48" steel or wood stakes at 5' on center, reinforced by nylon or steel netting. Fabric shall be anchored in a 6? backfill trench.

Erosion control devices shall be in place from October 15 to April 15, except for entrances and exits which shall be in place each night and on weekends.

All permanent erosion control devices required on the plans shall be installed before final inspection is given.

RRM DESIGN GROUP
RECORD DRAWINGS
VILLAS AT ISLAY CREEK
TRACT 1750 PHASE IV
PLANS PREPARED UNDER THE SUPERVISION OF
(Limited by Business & Professions Code 6735.6(b))
7/6/00
GERALD L. MICHAEL R.C.E. 36895 DATE

RRM DESIGN GROUP
Architecture · Planning · Engineering · Surveying · Interiors · Landscape Architecture
3020 South Higuera Street, San Luis Obispo, California 93401 805/543-1794
1125 – 11th Street, Modesto, California 95354 209/544-1794
Los Angeles, Architect: Gillick · Jerry Nichols, AIA 2655 · at 6295 · Jeff Forbes, Landscape Architect 866

PUBLIC IMPROVEMENT PLANS FOR:

Villas at Islay Creek

TRACT 1750, PHASE 4

EROSION CONTROL PLAN

ENGINEER OF RECORD:
REGISTERED PROFESSIONAL ENGINEER GERALD L. MICHAEL No. 36895 6/30/00 CIVIL STATE OF CALIFORNIA
DATE: 7/6/00

	DATE	REVISIONS DESCRIPTION	APPROVAL DESIGN ENGR.	APPROVAL CITY
600	1	AS-BUILT REVISIONS		

DRAWN BY: MAP | CHECKED BY: TJW | JOB NO. E96805 | SHEET 14 OF 14

11-6-96

Tract 1750
Orcutt Road Improvements
SAN LUIS OBISPO, CALIFORNIA

Prior to construction the developer shall record offsite slope and drainage easements, and offers to dedicate required for Orcutt Road Improvements.

GENERAL NOTES:

1.) ALL CONSTRUCTION WORK AND INSTALLATIONS SHALL CONFORM TO THE LATEST VERSION OF THE CITY AND COUNTY OF SAN LUIS OBISPO STANDARDS AND SPECIFICATIONS.

2.) ALL WORK IS TO BE INSPECTED BY THE CITY AND COUNTY OF SAN LUIS OBISPO PUBLIC WORKS INSPECTORS. COORDINATE WITH PUBLIC WORKS INSPECTOR. ONLY INSPECTED WORK WILL BE ACCEPTED BY THE CITY AND COUNTY.

3.) IT SHALL BE THE RESPONSIBILITY OF THE CONTRACTOR OR PERMITTEE TO CONTACT "UNDERGROUND SERVICE ALERT" AT 1(800)642–2444, A TOLL FREE TELEPHONE NUMBER, FOR LOCATION OF POWER, TELEPHONE, OIL AND NATURAL GAS FACILITIES AND HE SHALL ALSO CONTACT THE APPROPRIATE AGENCY FOR THE LOCATION OF CABLE TV, WATER, SEWER, DRAINAGE OR OTHER UNDERGROUND FACILITIES.

4.) ALL WORK SHALL BE DONE IN ACCORDANCE WITH THE SOILS ENGINEERING REPORT PREPARED BY:

TERRATECH – JOB No: L0496/6, DATED APRIL 1996
141 SUBURBAN ROAD, SUITE D1
SAN LUIS OBISPO, CA. 93401

TERRATECH – JOB No: L1148, DATED JUNE 17, 1996
141 SUBURBAN ROAD, SUITE D1
SAN LUIS OBISPO, CA. 93401

5.) BENCHMARK: CITY OF SAN LUIS OBISPO BENCHMARK No. 7–397 L & T AT THE B.C.R. OF THE S.W.C. OF TANK FARM ROAD AND BROOKPINE STREET. ELEVATION: 255.54

6.) IN THE EVENT THAT GRADING OR OTHER OPERATIONS DO UNCOVER BURIED ARTIFACTS, ALL CONSTRUCTION ACTIVITIES SHALL BE HALTED TO PREVENT FURTHER DISRUPTION OF THE NEWLY DISCOVERED ARCHAEOLOGICAL SITE. A QUALIFIED ARCHAEOLOGIST SHOULD THEN EVALUATE THE DISCOVERY AND RECOMMEND THE APPROPRIATE DISPOSITION OF THE RESOURCES. THE COMMUNITY DEVELOPMENT DIRECTOR SHALL BE NOTIFIED. ALL STATE AND FEDERAL LAWS SHALL BE COMPLIED WITH.

7.) EACH CONTRACTOR WILL BE RESPONSIBLE FOR THE PREVENTION OF WIND EROSION AND DUST CONTROL WITHIN HIS AREA OF OPERATION. HE IS TO MAINTAIN A WATER TRUCK ON THE PROJECT AT ALL TIMES.

8.) ALL EXISTING FILLS SHALL BE APPROVED BY THE SOILS ENGINEER OR REMOVED BEFORE ANY ADDITIONAL FILLS ARE ADDED.

9.) ALL FILLS SHALL BE BENCHED INTO COMPETENT MATERIALS.

10.) NO CUT OR FILL SHALL EXCEED A 2:1 SLOPE.

11.) ALL DISTURBED SURFACES SLOPED 4:1 AND GREATER SHALL BE PREPARED AND MAINTAINED TO CONTROL EROSION BY HYDROSEEDING AND EFFECTIVE PLANTING TO BE COMPLETED NO LATER THAN 30 DAYS PRIOR TO REQUEST FOR FINAL APPROVAL. HYDROSEED MIX SPECIFICATIONS ARE AS FOLLOWS:

* HYDRO–MULCH PER ACRE;
ANNUAL RYE – 40% (20 LBS.)
BLANDO BROME – 35% (17.5 LBS.)
CRIMSON OR ROSE CLOVER W/NITROGEN INOCULANTS – 15% (7.5 LBS.)
CALIFORNIA NATIVE WILDFLOWERS – 10% (5 LBS.)
BINDER (AZ–TAC OR EQUAL) – 100 LBS.
FERTILIZER (14–4–7) – 320 LBS.
FIBER MULCH – 2000 LBS.
SLOPES 4:1 OR GREATER SHALL BE OVER SEEDED WITH 50 lbs./ACRE ANNUAL RYE GRASS.

* USE "CREEK" HYDRO-MULCH ADJACENT TO CREEK AND IN V.PITCH (SEE NOTE #16).

12.) ESTIMATED EARTHWORK QUANTITIES:

A. CUT 12,600 CU.YDS.

B. FILL 7300 CU.YDS.

C. QUANTITY ESTIMATES SHOWN ON THIS PLAN ARE TO BE USED FOR BONDING AND PERMIT PURPOSES ONLY. IT IS THE RESPONSIBILITY OF THE CONTRACTOR TO VERIFY ACTUAL QUANTITIES FOR THE PURPOSES OF CONSTRUCTION.

~~D. EXCESS MATERIAL TO BE DEPOSITED ON THE PROPERTY OF E. WIXOM, ET AL, APN 044–411–008. LOCATION OF THE FILL TO BE DETERMINED AT TIME OF CONSTRUCTION. COMPACTION OF THE FILL SHALL BE SUPERVISED BY THE PROJECT SOILS ENGINEER.~~

13.) A CITY AND COUNTY ENCROACHMENT PERMIT IS REQUIRED FOR ALL WORK PERFORMED WITHIN THE CITY RIGHT–OF–WAY.

14.) A COMPACTION REPORT SHALL BE PROVIDED BY A LICENSED SOILS ENGINEER STATING THAT THE BASE AND SUBGRADE WERE PREPARED IN ACCORDANCE WITH THE PROJECT SOILS REPORT OR THE CITY OF S.L.O. STD. DWG. No. 7110. 95% MINIMUM COMPACTION.

15.) CONTRACTOR SHALL PROVIDE A "TRAFFIC CONTROL PROGRAM" TO THE CITY AND COUNTY OF SAN LUIS OBISPO PRIOR TO CONSTRUCTION. THE PROGRAM SHALL INCLUDE, BUT NOT BE LIMITED TO, A SCHEDULE OF ROAD CLOSURES, ADVANCED WARNING SIGNS, CONSTRUCTION WARNING SIGNS AND TEMPORARY BARRICADES TO THE SATISFACTION OF THE CITY INSPECTOR(S) AND THE CITY ENGINEER. INSTALLATION OF APPROVED TRAFFIC CONTROL MEASURES SHALL BE THE FIRST ORDER OF WORK.

16.) USE "CREEK" HYDRO-MULCH PER THE MIX SHOWN BELOW, IN ALL DISTURBED AREAS ADJACENT TO THE CREEK AND IN THE EROSION MAT LINED SWALE. THE CONTRACTOR SHALL PROVIDE TEMPORARY IRRIGATION UNTIL GROWTH IS ESTABLISHED.

"CREEK" HYDRO-MULCH

hydroseed mixes shall consist of the following (in lbs./acre):

2000 lbs. - Wood Fiber Mulch (green in color)
900 lbs. - Gro-Power Humus Base Fertilizer 5-3-1
400 lbs. - Gro-Power Controlled Release Fertilizer 12-8-8
150 lbs. - Broadleaf P4 Fine Humectant
100 lbs. - R2400-400CL Tackifier

Seed Mix (non-irrigated, in lbs./acre):

5 lbs - Vulpia microstachys
3 lbs - Carex spissa
3 lbs - Mimulus guttatus
3 lbs - Collinsia heterophylla
1 lb - Elymus trachycaulus majus
1 lb - Muhlenbergia rigens
1 lb - Koeleria macrantha

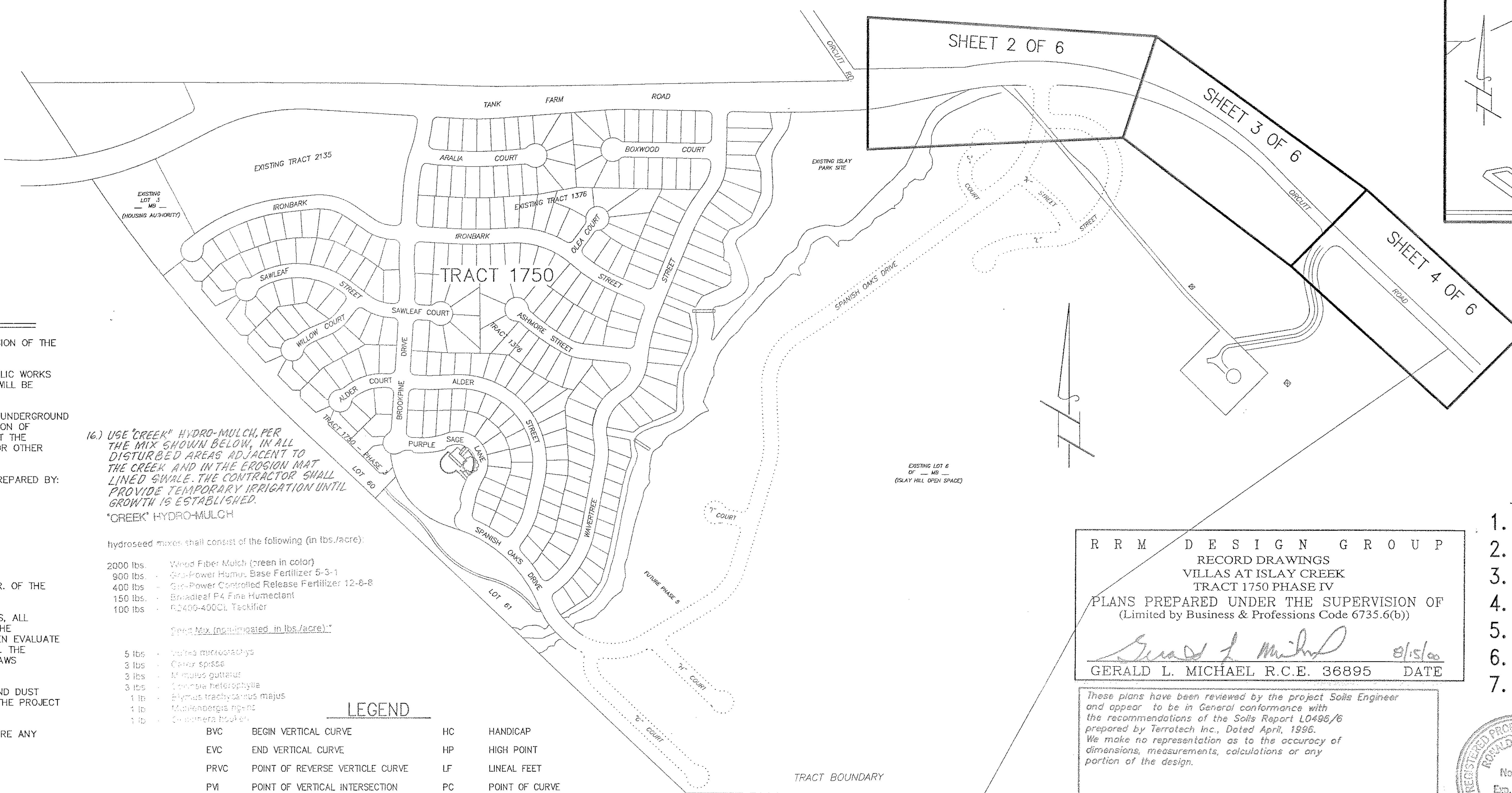

SITE MAP
–nts–

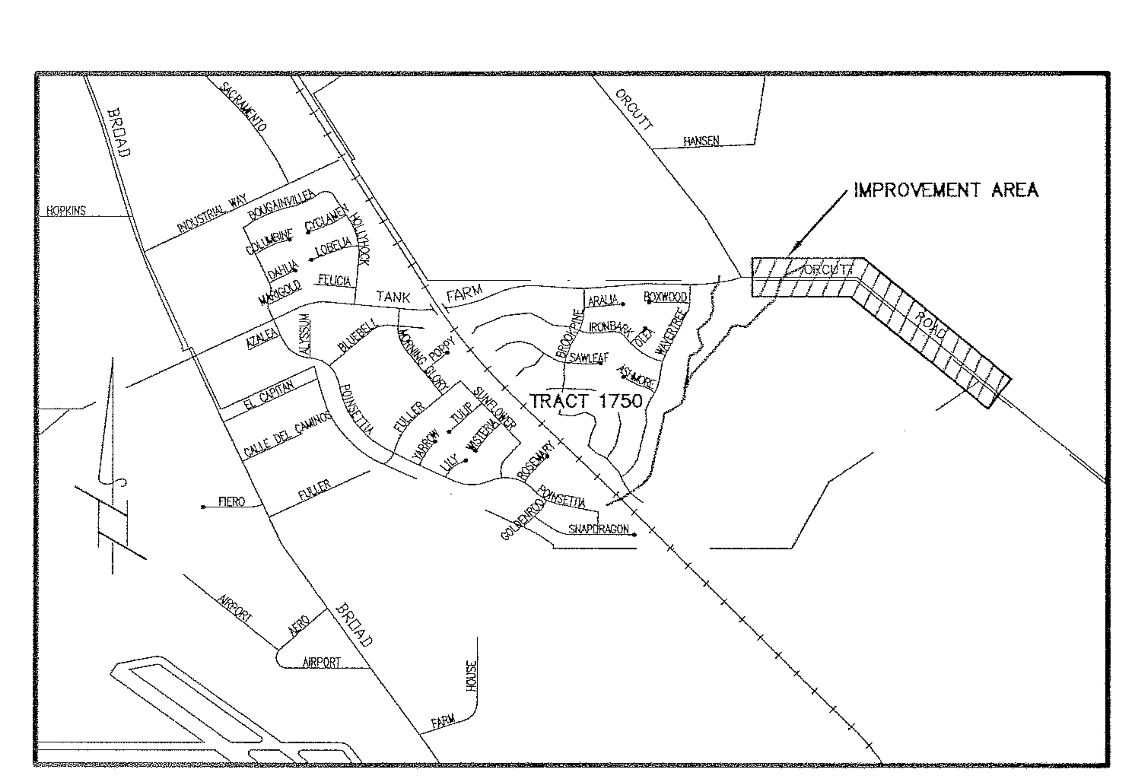

VICINITY MAP
–nts–

SHEET INDEX

1. TITLE SHEET
2. ORCUTT ROAD – STA. 57+50 TO STA. 65+00
3. ORCUTT ROAD – STA. 65+00 TO STA. 74+00
4. ORCUTT ROAD – STA. 74+00 TO STA. 80+33.86
5. ORCUTT ROAD – STRIPING PLAN
6. DETAIL SHEET
7. CALTRANS DETAIL SHEET

LEGEND

BVC	BEGIN VERTICAL CURVE	HC	HANDICAP
EVC	END VERTICAL CURVE	HP	HIGH POINT
PRVC	POINT OF REVERSE VERTICLE CURVE	LF	LINEAL FEET
PVI	POINT OF VERTICAL INTERSECTION	PC	POINT OF CURVE
BCR	BEGIN CURB RETURN	PCC	POINT OF COMPOUND CURVE
ECR	END CURB RETURN	PL	PROPERTY LINE
CL	CENTERLINE	PRC	POINT OF REVERSE CURVE
DW	DRIVEWAY	PT	POINT OF TANGENT
EP	EDGE OF PAVEMENT	R/W	RIGHT–OF–WAY
ES	EDGE OF SHOULDER	STA	CENTERLINE STATION
EX	EXISTING	SS	SANITARY SEWER
FF	FINISH FLOOR	TI	TRAFFIC INDEX
FG	FINISH GRADE	TC	TOP OF CURB
FL	FLOW LINE	TG	TOP OF GRATE
FS	FINISH SURFACE	TW	TOP OF WALL
×220.7	EXISTING ELEVATION	— — —	PROPERTY LINE
221.4FG	PROPOSED ELEVATION		
2%	RATE & DIRECTION OF FLOW		CONCRETE CURB WITH INTEGRAL SIDEWALK
220	EXISTING INDEX CONTOUR		
	EXISTING INTERMEDIATE CONTOUR		HANDICAP RAMP
215	PROPOSED INDEX CONTOUR		EXISTING MANHOLE
	PROPOSED INTERMEDIATE CONTOUR		PROPOSED MANHOLE
FH	FIRE HYDRANT		PROPOSED CENTERLINE MONUMENT
	PROPOSED STREET LIGHT	—x—x—	EXISTING FENCE
	EXISTING STREET LIGHT	—x—x—	PROPOSED FENCE
	FUTURE STREET LIGHT		

R R M DESIGN GROUP
RECORD DRAWINGS
VILLAS AT ISLAY CREEK
TRACT 1750 PHASE IV
PLANS PREPARED UNDER THE SUPERVISION OF
(Limited by Business & Professions Code 6735.6(b))
GERALD L. MICHAEL R.C.E. 36895 — DATE 8/15/00

These plans have been reviewed by the project Soils Engineer and appear to be in General conformance with the recommendations of the Soils Report L0496/6 prepared by Terratech Inc., Dated April, 1996. We make no representation as to the accuracy of dimensions, measurements, calculations or any portion of the design.

SOILS ENGINEER — DATE 04/11/97

REGISTERED PROFESSIONAL ENGINEER — RONALD J. CHENCH — No. 2104 — Exp. 3-31-99 — GEOTECHNICAL — STATE OF CALIFORNIA

REGISTERED PROFESSIONAL ENGINEER — TIMOTHY P. NANSON — No. 26598 — CIVIL — 3-31-00 — STATE OF CALIFORNIA

REGISTERED PROFESSIONAL ENGINEER — GLEN L. PRIDDY — No. 30789 — 3-31-00 — CIVIL — STATE OF CALIFORNIA

California Coordinates
N 646 E 1216

COUNTY Rd. # 2039
COUNTY W.O.# PIIN741

COUNTY ENGINEER'S APPROVAL
TIMOTHY PAUL NANSON, R.C.E. 26598 — DATE 4-11-97

R R M DESIGN GROUP
Architecture · Planning · Engineering · Surveying · Interiors · Landscape Architecture
3701 South Higuera Street, San Luis Obispo, California 93401 805/543-1794
131 South Second Avenue, Oakdale, California 95354 209/847-1794
Vic Montgomery, Architect C011090 · Jerry Michael, RCE 36895, LS 6276 · Jeff Ferber, Landscape Architect 2844

PUBLIC IMPROVEMENT PLANS FOR:
Tract 1750
Orcutt Road Improvements
TITLE SHEET

city of san luis obispo

NOTICE

APPROVAL BY THE CITY DOES NOT GUARANTEE ACCURACY NOR COMPLETENESS OF THESE PLANS. IT DOES AUTHORIZE THE OWNER TO BUILD THE PROJECT HEREON. IT SHALL BE THE RESPONSIBILITY OF THE OWNER AND ENGINEER OF RECORD TO CORRECT ANY DEFICIENCIES THAT APPEAR DURING OR AFTER CONSTRUCTION. CITY SPECIFICATIONS AND ENGINEERING STANDARDS SHALL BE FOLLOWED UNLESS THEY ARE SPECIFICALLY WAIVED OR MODIFIED BY NOTES ON PLANS. THE ENGINEER OF RECORD SHALL PROVIDE REPRODUCIBLE "AS–BUILT" PLANS AND 3 FULL SETS OF MICROFICHE PLANS TO THE CITY PRIOR TO PROJECT BEING ACCEPTED BY THE CITY.

Utility	Signature	Date
PG&E	J. T. Haas	3-25-97
SO. CAL GAS	Robert C Martel	3-21-97
PACIFIC BELL	Lonny Mora	3-21-97
CATV	C. Bo...	3/24/97

ENGINEER OF RECORD:
REGISTERED PROFESSIONAL ENGINEER — GERALD L. MICHAEL — No. 36895 — exp. 6/30/00 — CIVIL — STATE OF CALIFORNIA
DATE: 3/26/97

REVISIONS

DATE	△	DESCRIPTION	APPROVAL DESIGN ENGR.	APPROVAL CITY
6/00	1	AS-BUILT REVISIONS		

DRAWN BY:	CHECKED BY:	JOB NO.
Mark Piorkowski	Tim Walters	E96806

ASSISTANT CITY ENGINEER APPROVAL:
REGISTERED PROFESSIONAL ENGINEER — GERALD W. KENNY — No. 36695 — exp. 6/30/00 — CIVIL — STATE OF CALIFORNIA
DATE: 5-6-97

~~COMM. DEV. DIRECTOR:~~ N.A. — DATE
CITY UTILITIES ENGINEER: — DATE 4/28/97
DATE
DATE

FILE/LOCATION — SHEET 1 OF 7

4-7-97

ORCUTT ROAD

SEE TYPICAL SECTION THIS SHEET

C.L. TANGENT
N78°10'59"E
123.91'

E. WIXOM, ETAL
APN 044-411-008

CON SPAN PRECAST ARCH
20'W x 5'H

INSTALL 37.5' PARABOLIC OFFSET PER CALTRANS STD. PLAN A77D.

STA: 61+40.54
GROUTT ROAD= INTER.
FUTURE SPAN. OAKS

CONSTRUCT HANDICAP RAMPS PER CITY OF SLO STD. No. 4441 (TYP BOTH SIDES)

INSTALL BAT ROOST, MOUNT TO CULVERT CEILING, PER DETAIL ON SHEET 6

CONSTRUCT CROSS GUTTER PER CITY OF SLO STD. No. 4310, FL ELEV. PER DETAIL AT LEFT

STA: 61+06.21 CONSTRUCT SEWER MH No. N19-01 PER CITY OF SLO STD. 6610

RELOCATE BARBED WIRE FENCE

INSTALL STREET LIGHT PER CITY OF SLO STD. 7910 (TYP)

EXISTING SEWER MANHOLE ADJUST TO FINISH GRADE PER CITY OF SLO STD. No. 6630
STA: 58+03 / I/S=257.06
STA: 59+95 / I/S=261.00

EXISTING ORCUTT ROAD R/W

COUNTY OF SAN LUIS OBISPO
CITY OF SAN LUIS OBISPO

SAWCUT & MATCH EXISTING

(EX. 12" WATER)
(EX. 8" SEWER)
(EX. GAS)
(EX. U.G. ELEC.)

RELOCATE EXISTING FIRE HYDRANT AND PLAN OFF-SET BEHIND CURB PER CITY OF SLO STD. No. 4310

CONSTRUCT CURB, GUTTER & INTEGRAL SIDEWALK PER CITY OF SLO. STD. No. 4310

TOP OF WATER LINE AT HEADWALL ELEV=238.04±, TO BE PROTECTED IN PLACE.

CONSTRUCT HEADWALL, CULVERT AND HEADWALL RAILING PER STRUCTURAL DRAWINGS (TO BE APPROVED PRIOR TO CONSTRUCTION).

CONSTRUCT "CONTECH" ALUMINUM BOX CULVERT STRUCTURE #48-0A APPROVED EQUAL, 15'-5" WIDE x 4'-11" HIGH W/ 8" THK. R.C. CONCRETE FLOOR WITH BROOM FINISH THRU CULVERT TO PREVENT SCOUR
DIST: 139.08' / BRG: S50°56'15"W
NOTE: APPROVED STRUCTURAL PLANS REQUIRED PRIOR TO CONSTRUCTION.

MAINTENANCE EASEMENT TO BE GRANTED BY PROPERTY OWNER

W.L. 1-23-96
264.1

C.L. CURVE
Δ = 57°22'06"
R = 1200.00
L = 1201.52

PROPOSED RIGHT OF WAY DEDICATION TO BE OBTAINED BY DEVELOPER

CONSTRUCT AC BERM PER CITY OF SLO STD. No. 7120 N89°08'03"E

EXISTING PAVEMENT TO BE REMOVED

INSTALL METAL BEAM GUARD RAIL PER CALTRANS STD. PLAN A77A

SLOPE MAINTENANCE EASMT. TO THE COUNTY OF S.L.O.

INSTALL 37.5' PARABOLIC OFFSET PER CALTRANS STD. PLAN A77D.

61+53.00 BEGIN GUARD RAIL

65+00 MATCHLINE SEE SHEET 3

8" CONC. APRON WITH BROOM FINISH AND 8" x 24" CUT-OFF WALL

PLACE RIP RAP AT CULVERT OUTLET PER DETAIL AT RIGHT

PROVIDE "CREEK HYDRO-MULCH" IN AREAS ADJACENT TO CREEK OUT (IF NECESSARY IF BEDROCK IS FOUND)

FUTURE SEWER MANHOLE PER PHASE 6

FUTURE SPANISH OAKS DRIVE (TRACT 1750-6)

INSTALL STREET NAME & STOP SIGN PER CITY OF S.L.O. STD. No. 7240

24" SPANISH OAKS S.D. CROSSING N88°04'59"E - SEE PROFILE BELOW

INSTALL 6' HIGH CHAIN LINK FENCE WITH DOUBLE GATES (14' WIDE x 6' HIGH)
INSTALL (4) 2" DIA. RED REFLECTORS ON THE GATES.

CAP WITH REMOVABLE PLUG
STUB W/ CAP

EXISTING RIGHT OF WAY DEDICATED PER TR. NO. 1750 UNITS 1 & 2 (17 MB 25)

INSTALL PG&E, PACBELL & SONIC CABLE CONDUITS

RELOCATE BARBED WIRE FENCE TO NEW RIGHT OF WAY REPLACE FENCING IF NECESSARY

LINED EARTH SWALE SEE DETAIL HEREON

EXISTING 12" WATER MAIN TO WATER TANK - FUTURE PHASE 6 TO TIE INTO AT FUTURE STREET

NOTE:
DETAILED STRUCTURAL PLANS FOR THE HEADWALLS, CULVERTS, FOOTINGS AND RAILING ON HEADWALLS ARE NOT YET COMPLETED. STRUCTURAL PLANS MUST BE APPROVED PRIOR TO CONSTRUCTION.

NOTES:

1.) ALL EXISTING OVERHEAD AND BURIED UTILITY LOCATIONS SHALL BE FIELD VERIFIED BY CONTRACTOR PRIOR TO ANY EXCAVATION.

2.) ALL CURB RETURNS SHALL BE 28 FT. RADIUS AT FACE OF CURB UNLESS NOTED OTHERWISE.

3.) EXISTING AC TO BE PULVERIZED AND INCORPORATED AS FILL MATERIAL PER STATE OF CALIFORNIA STANDARD SPECIFICATIONS.

4.) EXISTING OVERHEAD ELECTRICAL LINES AND EXISTING UNDERGROUND TELEPHONE LINES ARE TO BE REMOVED AND RELOCATED TO SOUTH SIDE OF STREET AS SHOWN.

5.) SEE SHEET 1 FOR GENERAL NOTES.

0 20 40 80
(IN FEET)
1 inch = 40 ft.

RRM DESIGN GROUP
RECORD DRAWINGS
VILLAS AT ISLAY CREEK
TRACT 1750 PHASE IV
PLANS PREPARED UNDER THE SUPERVISION OF
(Limited by Business & Professions Code 6735.6(b))
GERALD L. MICHAEL R.C.E. 36895 — DATE

TYPICAL SECTION – ORCUTT ROAD

STA. 57+50± TO 62+00±

R/W 84' MIN. R/W
12' MIN. 20' 32' 20' MIN.
BUFFER ZONE
2' 3' SHDR. TC=C.L.-1.45' 6' 12'
2% *6% SUPERELEVATION 2%
4.5" A.C. PAVEMENT (TYP)
15" CL. II AGG. BASE (TYP)**
2:1 MAX. TO EX. WHEN NO RET. WALL
3'-6" HIGH GUARD RAIL
RETAINING WALL PER STRUCTURAL DRAWINGS
12" MIN.
* X-FALL VARIES FROM 2% CROWN-SECTION TO 6% SUPERELEVATION

PROPOSED CULVERT
FULLY EXPOSED ROCK IN 8" THK. CONC. FLOOR

SECTION A-A

12" CLEAR ZONE
PLACE 1/4 TON ROCK SECTION "A-A" (20"-24" DIA. NOMINAL SIZE) IN CONC. FLOOR. PLACE ROCK SUCH THAT A MIN. OF 12" CLEARANCE EXISTS AROUND ALL SIDES OF EACH ROCK.

OUTLET RIP RAP DETAIL

TYPICAL SECTION – ORCUTT ROAD

STA. 62+00± TO 69+00±

R/W 84' MIN. R/W
32' MIN. 52'
12' MIN. 20' 20' 32'
2' 3' 3'
SLOPE VARIES SEE PLAN
6% SUPER ELEVATION 2%
2:1 MAX.
4.5" A.C. PAVEMENT
** 19" CL. II AGG. BASE
6" A.C. DIKE
6' WIDE x 18" DEEP LINED EARTH SWALE PER DETAIL HEREON (WHERE SHOWN ON PLAN)

** T.I.=8, R-VALUE TO BE BASED UPON FIELD TESTS ON ACTUAL SUBGRADE, WHICH WILL DETERMINE THE FINAL THICKNESS OF STRUCTURAL SECTION ELEMENTS.

SLOPE 2:1 MAX., 2% MIN. TO NATURAL
TURN UNDER 6"± BOTH SIDES
6' 5' LEVEL BENCH
3' 3'
1.5'
TOP OF FILL SLOPE MIN. 1' ABOVE EDGE OF SWALE
2:1 MAX. CUT OR FILL SLOPE TO ORCUTT RD.

GRADED EARTH SWALE LINED WITH "EXCEL" SD.3 EROSION CONTROL BLANKET, OR APPROVED EQUAL. CONTACT TIM KENNEDY AT 772-6043. PROVIDE "CREEK" HYDRO-MULCH BEFORE & AFTER INSTALLATION OF MAT.

TYP. LINED SWALE DETAIL

R/W 11' 6' 6' R/W
56'
26' 2' 6' 20' 20' 6' 2'
TC=C +0.01
2% 2% 2% 2%
2:1 MAX. (TYP.)
2:1 MAX. (TYP.)
9.25 WATER
SEWER
4.5" A.C. PAVING WITH FOG SEAL PRIME COAT
7" CLASS II AGGREGATE BASE **
10" CLASS III SUB-BASE **

TYPICAL SECTION – FUTURE SPANISH OAKS

PROFILE SCALE
HORIZONTAL: 1" = 40'
VERTICAL: 1" = 4'

NORTH EDGE OF PAVEMENT
EX. CROWN SECTION
TRANSITION TO SUPERELEVATION
CONSTRUCTION
BEGIN FULL SUPERELEVATION CROSS-SECTION
100' V.C. PVI=256.72
100' V.C. PVI=260.29
600.00' V.C. PVI=262.64
PARTIAL 600' V.C.
TAN. GR.=+2.28%
TAN. GR.=+2.0%
TAN. GR.=+3.57%
STA. 59+58± CONNECT TO EX. SEWER MANHOLE (252.22± INV. IN)
(+1.1% ±)
2.00%
SOUTH TOP OF CURB
TAN. GR.=+0.86%
TRANSITION TO SUPERELEVATION
EX. CROWN SECTION
BEGIN FULL SUPERELEVATION CROSS-SECTION
TAN. GR.=+2.56%
100' V.C. PVI=257.89
PARTIAL 600' V.C.
EXIST. 12" WATER MAIN
INSTALL 107.21 LF 8" PVC SEWER MAIN S=0.00606
STA: 61+06.21 SEWER MANHOLE #N19-01
STA: 61+106.21 SEWER MANHOLE #N19-02
8" THK CONC. FLOOR TO PREVENT SCOUR
FOOTINGS PER STRUCTURAL DWGS. MIN. 12" BELOW CREEK FLOW LINE
SEE SEWER DETAIL AT RIGHT FOR CONTINUATION
ALUMINUM BOX CULVERT
103.54' AC. BERM
FINISH SURFACE AT CENTERLINE
EXISTING GROUND AT CENTERLINE
65+00 MATCHLINE SEE SHEET 3
5.61%
INSTALL 78.79 LF 8" PVC SEWER MAIN S=0.00559
REMOVABLE PLUG
24" RCP STORM DRAIN
FUTURE MANHOLE (SPANISH OAKS)
EXIST. CREEK FL.
8" THK. CONC. ENERGY DISSIPATOR WITH 24" GUTTER WALL
SEWER DETAIL
CULVERT HEADWALL
SPANISH OAKS (FUTURE)
8" PVC SEWER
6" MIN. CLEAR
INSTALL 68.4 LF 24" RCP STORM DRAIN
SPANISH OAKS STORM DRAIN CROSSING

600.00' V.C.
PI STA = 61+89.82
PI ELEV = 264.92
A.D. = 3.61
K = 166.00

CURB RETURN CURVE DATA
Δ = 93°29'00"
R = 28.00'
L = 45.69'
T = 29.76'
PARTIAL 600' V.C.
WEST CURB RETURN

CURB RETURN CURVE DATA
Δ = 91°20'16"
R = 28.00'
L = 44.64'
T = 28.66'
FUTURE PV=266.30
PARTIAL 600' V.C.
EAST CURB RETURN

LENGTH ON TANGENT
LENGTH ON CURVE
4.00' 6.99' 22.53'
2.83' 5.09' 18.03'
6.60' 10.56' 13.17'
4.20' 5.09' 9.54'

RRM DESIGN GROUP
Architecture · Planning · Engineering · Surveying · Interiors · Landscape Architecture
3901 South Higuera Street, San Luis Obispo, California 93401 805/545-1794
131 South Second Avenue, Oakdale, California 95354 209/847-1794
Tri-Weingartner, Architect #21000 • Jerry Michael, RCE 36895, LS 6578 • Jeff Parker, Landscape Architect 2864

PUBLIC IMPROVEMENT PLANS FOR:
Tract 1750
Orcutt Road Improvements
STA. 57+50 TO STA. 65+00

ENGINEER OF RECORD: REGISTERED PROFESSIONAL ENGINEER GERALD L. MICHAEL No. 36895 exp. 6/30/00 CIVIL STATE OF CALIFORNIA
DATE: 3/26/97

ASSISTANT CITY ENGINEER APPROVAL: REGISTERED PROFESSIONAL ENGINEER GERALD W. KENNY No. 36895 exp. 6/30/00 CIVIL STATE OF CALIFORNIA
DATE: 5/6/97

DATE		REVISIONS DESCRIPTION	APPROVAL DESIGN ENGR.	APPROVAL CITY
4/00	1	AS-BUILT REVISION		

DRAWN BY: MAP | CHECKED BY: TJW | JOB NO. E96806 | SHEET 2 OF 7

57+00 58+00 59+00 60+00 61+00 62+00 63+00 64+00 65+00

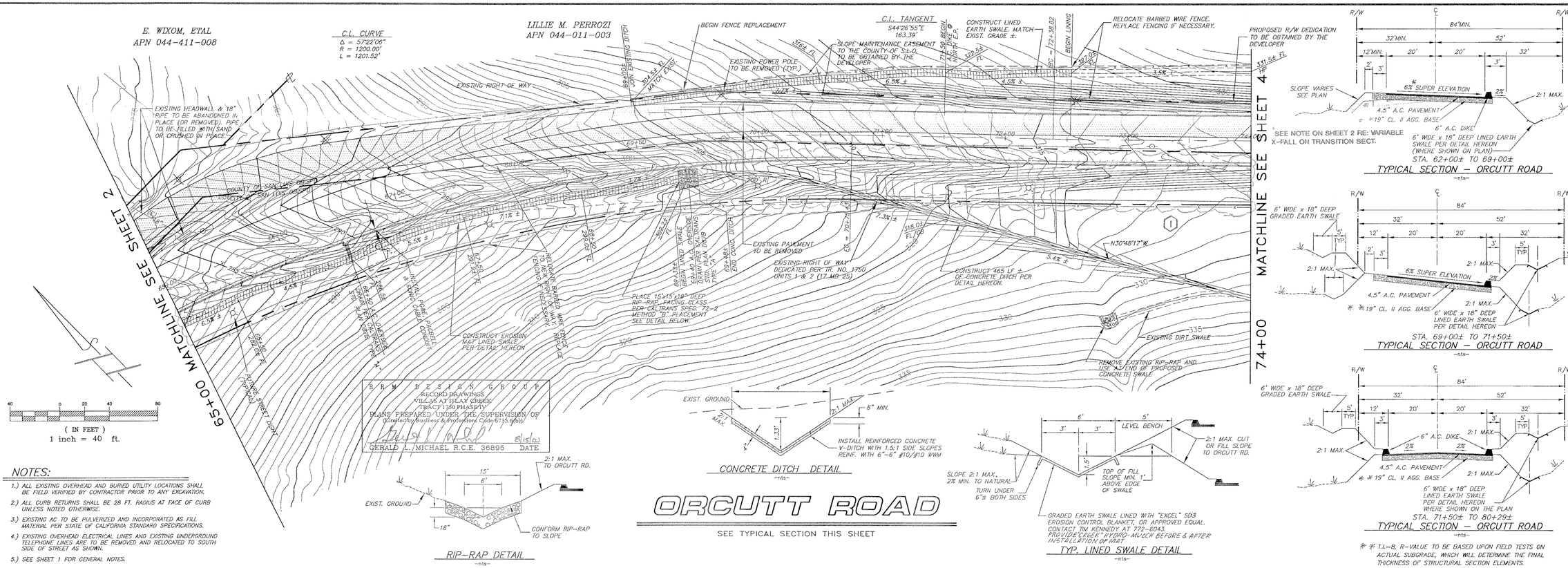

R R M D E S I G N G R O U P
Architecture • Planning • Engineering • Surveying • Interiors • Landscape Architecture
3701 South Higuera Street, San Luis Obispo, California 93401 805/543-1794
131 South Second Avenue, Oakdale, California 95354 209/845-1794
Joe Montgomery, Architect C011090 • Jerry Nichael, RCE 36895, LS 6278 • Jeff Farber, Landscape Architect 2844

PUBLIC IMPROVEMENT PLANS FOR:
Tract 1750
Orcutt Road Improvements
STA. 65+00 TO STA. 74+00

ENGINEER OF RECORD: REGISTERED PROFESSIONAL ENGINEER GERALD L. MICHAEL No. 36895 exp. 6/30/00 CIVIL STATE OF CALIFORNIA
DATE: 3/20/97

ASSISTANT CITY ENGINEER APPROVAL: REGISTERED PROFESSIONAL ENGINEER GERALD W. ADAMY No. 36695 exp. 6/30/00 CIVIL STATE OF CALIFORNIA
DATE: 5/6/97

DATE		REVISIONS	APPROVAL	
		DESCRIPTION	DESIGN ENGR.	CITY
6/00	1	AS-BUILT REVISIONS		

DRAWN BY:	CHECKED BY:	JOB NO.	SHEET
MAP	TJW	E96806	3 OF 7

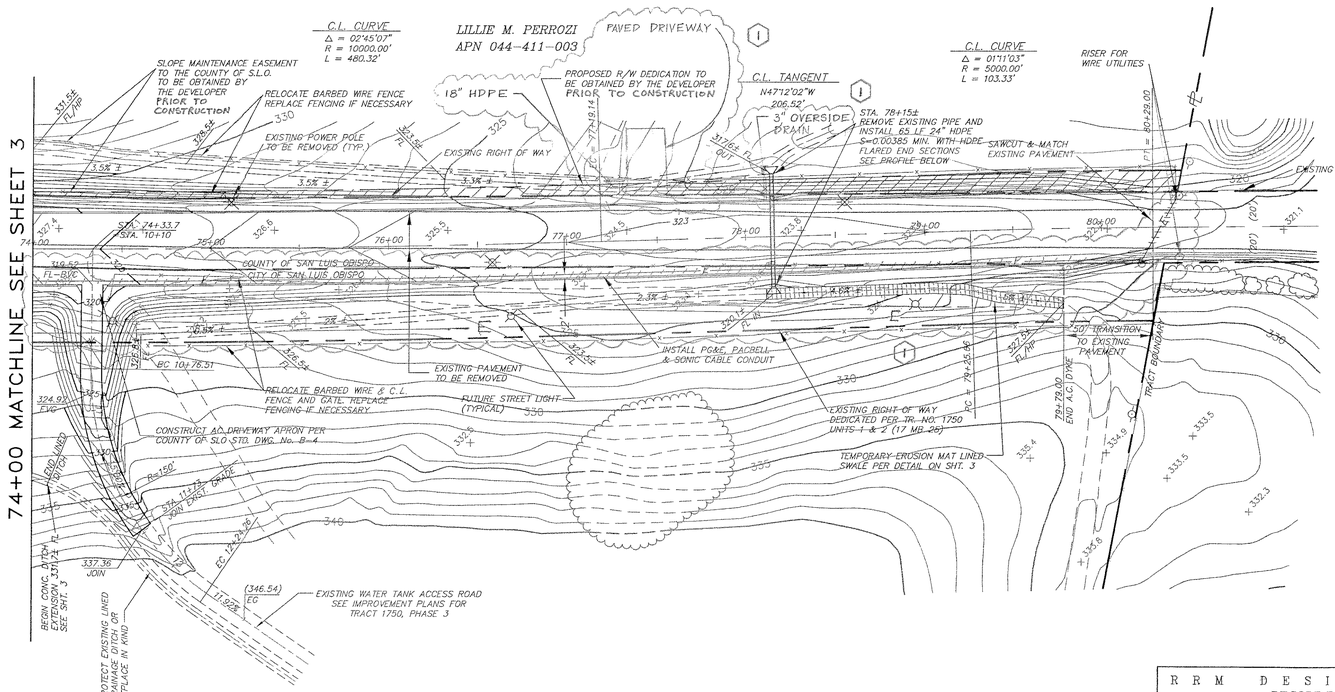

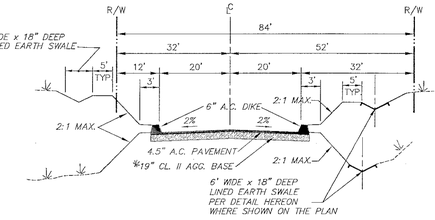

STA. 71+50± TO 80+29±

TYPICAL SECTION – ORCUTT ROAD

-nts-

※ T.I.=8, R-VALUE TO BE BASED UPON FIELD TESTS ON ACTUAL SUBGRADE, WHICH WILL DETERMINE THE FINAL THICKNESS OF STRUCTURAL SECTION ELEMENTS.

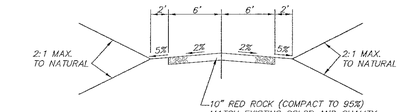

TYPICAL SECTION – TANK ACCESS ROAD

-nts-

ORCUTT ROAD

SEE TYPICAL SECTION THIS SHEET

R R M D E S I G N G R O U P
RECORD DRAWINGS
VILLAS AT ISLAY CREEK
TRACT 1750 PHASE IV
PLANS PREPARED UNDER THE SUPERVISION OF
(Limited by Business & Professions Code 6735.6(b))

GERALD L. MICHAEL R.C.E. 36895 — DATE 5/15/00

NOTES:

1.) ALL EXISTING OVERHEAD AND BURIED UTILITY LOCATIONS SHALL BE FIELD VERIFIED BY CONTRACTOR PRIOR TO ANY EXCAVATION.

2.) ALL CURB RETURNS SHALL BE 28 FT. RADIUS AT FACE OF CURB UNLESS NOTED OTHERWISE.

3.) EXISTING AC TO BE PULVERIZED AND INCORPORATED AS FILL MATERIAL PER STATE OF CALIFORNIA STANDARD SPECIFICATIONS.

4.) EXISTING OVERHEAD ELECTRICAL LINES AND EXISTING UNDERGROUND TELEPHONE LINES ARE TO BE REMOVED AND RELOCATED TO SOUTH SIDE OF STREET AS SHOWN.

5.) SEE SHEET 1 FOR GENERAL NOTES.

PROFILE SCALE
HORIZONTAL: 1" = 40'
VERTICAL: 1" = 4'

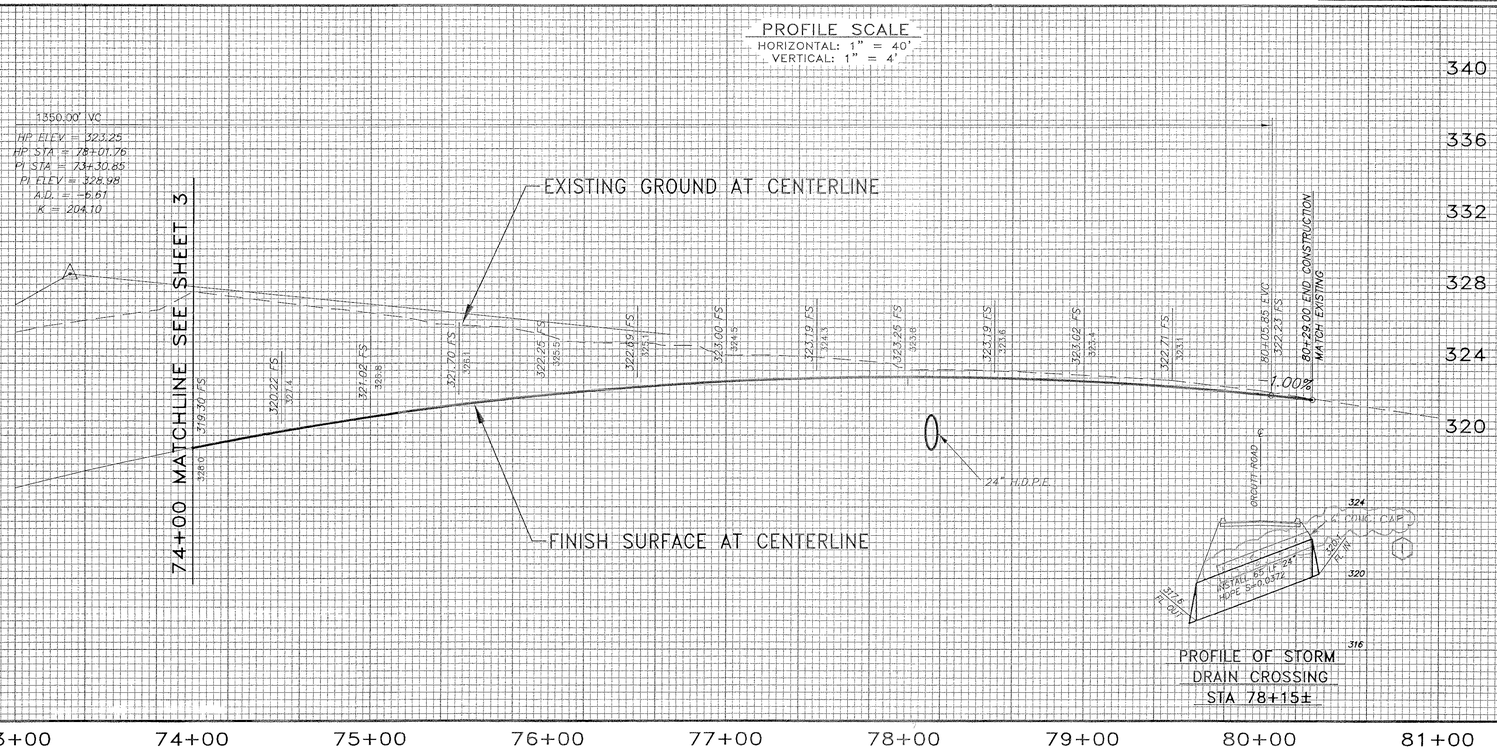

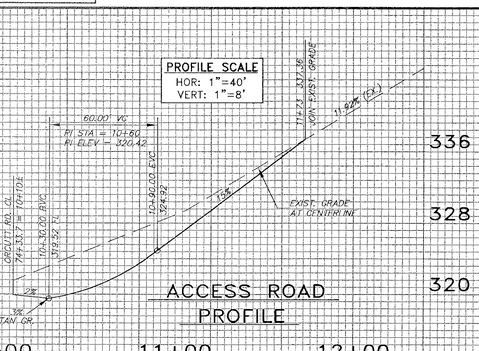

R R M D E S I G N G R O U P
Architecture · Planning · Engineering · Surveying · Interiors · Landscape Architecture
3701 South Higuera Street, San Luis Obispo, California 93401 805/543-1794
101 South Second Avenue, Oakdale, California 95354 209/847-1794
Tim Montgomery, Architect C011090 · Jerry Michael, RCE 36895, LS 6576 · Jeff Farber, Landscape Architect 2944

PUBLIC IMPROVEMENT PLANS FOR:
Tract 1750
Orcutt Road Improvements
STA. 74+00 TO STA. 80+33.86

ENGINEER OF RECORD: REGISTERED PROFESSIONAL ENGINEER GERALD L. MICHAEL No. 36895 exp. 6/30/00 CIVIL STATE OF CALIFORNIA
DATE: 3/30/97

ASSISTANT CITY ENGINEER APPROVAL: REGISTERED PROFESSIONAL ENGINEER GERALD W. KRANT No. 36695 exp. 6/30/00 CIVIL STATE OF CALIFORNIA
DATE: 5-6-97

DATE	△	REVISIONS DESCRIPTION	APPROVAL DESIGN ENGR.	APPROVAL CITY
6/00	1	AS-BUILT REVISION		

DRAWN BY: MAP | CHECKED BY: TJW | JOB NO. E96806 | SHEET 4 OF 7

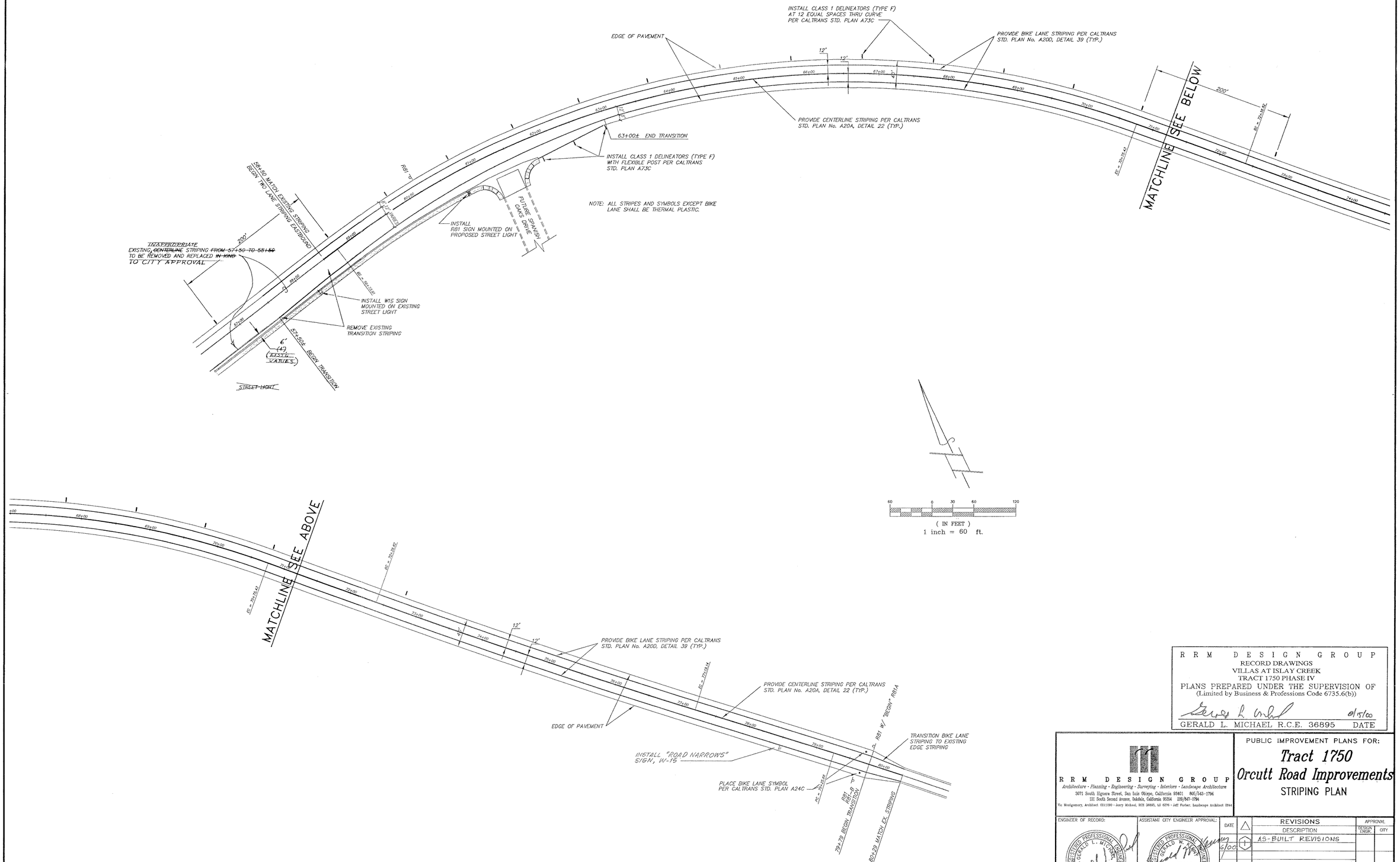

R R M D E S I G N G R O U P
RECORD DRAWINGS
VILLAS AT ISLAY CREEK
TRACT 1750 PHASE IV
PLANS PREPARED UNDER THE SUPERVISION OF
(Limited by Business & Professions Code 6735.6(b))

GERALD L. MICHAEL R.C.E. 36895 DATE 8/15/00

R R M D E S I G N G R O U P
Architecture · Planning · Engineering · Surveying · Interiors · Landscape Architecture
3071 South Higuera Street, San Luis Obispo, California 93401 805/543-1794
131 South Second Avenue, Oakdale, California 95354 209/847-1794
Vic Montgomery, Architect C011090 · Jerry Michael, RCE 36895, LS 6276 · Jeff Farber, Landscape Architect 2844

PUBLIC IMPROVEMENT PLANS FOR:

Tract 1750
Orcutt Road Improvements
STRIPING PLAN

ENGINEER OF RECORD: REGISTERED PROFESSIONAL ENGINEER GERALD L. MICHAEL No. 36895 exp. 6/30/00 CIVIL STATE OF CALIFORNIA
DATE: 3/20/97

ASSISTANT CITY ENGINEER APPROVAL: REGISTERED PROFESSIONAL ENGINEER GERALD W. KENNY No. 36695 exp. 6/30/00 CIVIL STATE OF CALIFORNIA
DATE: 5-6-97

DATE	△	REVISIONS DESCRIPTION	APPROVAL DESIGN ENGR.	CITY
6/00	1	AS-BUILT REVISIONS		

DRAWN BY:	CHECKED BY:	JOB NO.	SHEET
MAP	TJW	E96806	5 OF 7

CURB & 18" GUTTER (4030)

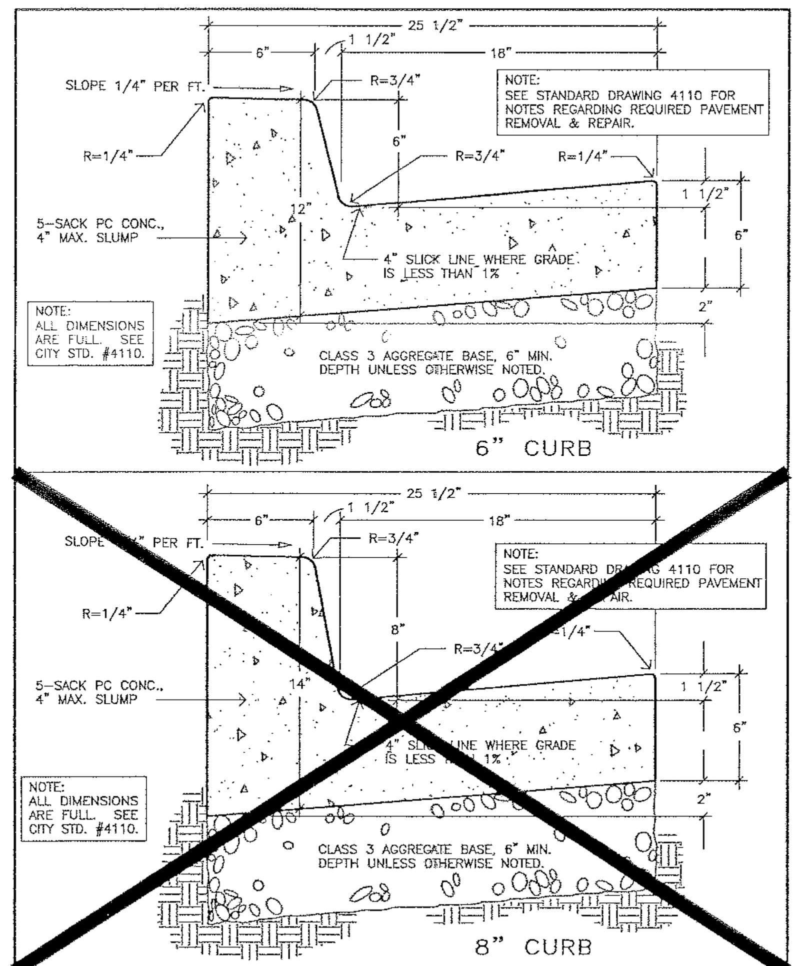

APPROVED BY CITY ENGINEER			DATE
REVISIONS	BY	APP	DATE
Added Pavement Note	*RMH*	*WAP*	*9-95*

city of san luis obispo — CURB & 18" GUTTER — 4030

SIDEWALK INTEGRAL & DETACHED (4110)

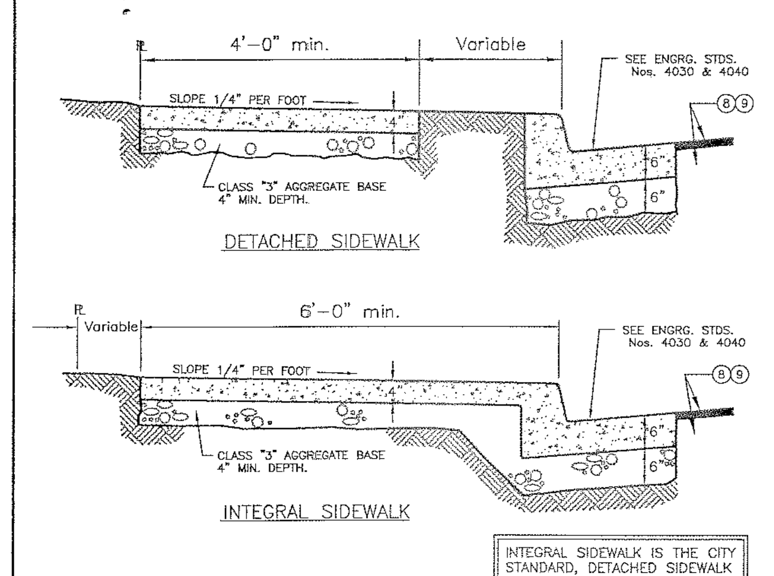

INTEGRAL SIDEWALK IS THE CITY STANDARD, DETACHED SIDEWALK SHALL NOT BE USED WOTHOUT APPROVAL OF CITY ENGINEER.

1. CONCRETE: 5 sack P.C. Concrete, 2" min. 4" max. slump.
2. FINISH: P.C.C. sidewalk shall be given a broom finish.
3. SEALING & CURING: A pigmented sealing and curing compound shall be used in accordance with the provisions of the Department of Transportation Standards Specifications.
4. DOWELS: 1/2" smooth bar dowels, 18" long at 24" O.C. at expansion joints and cold joints, to be greased or sleeved on one end.
5. EXPANSION JOINTS: 1/4" expansion material shall be placed at driveways and B.C.Rs.
6. WEAKENED PLANE JOINTS: Plastic pulltop quickjoint strips or approved equal shall be at 20' O.C. and 1 1/2" deep.
7. FOR ADDING SIDEWALK TO EXIST. CURB: #4x6" dowels shall be drilled in back of curb at 24" O.C.
8. PAVEMENT REMOVAL & REPAIR: Sawcut, remove & replace A.C. paving, 18" min. from gutter, 2" thicker than existing (5" min.). If pavement is P.C.C., sawcut exist. P.C.C. paving at gutter lip, dowel new gutter to exist. P.C.C. pavement. If exist. P.C.C. pavement has an A.C. cap, sawcut and remove A.C. cap 18" min. (except as required in note 9) from gutter and 3 ft. up & downstream and replace A.C. to provide a smooth uniform surface to match existing surfaces.
9. BIKE LANES: No longitudinal joints or seams are allowed in bike lanes. If a longitudinal joint may result due to the contractors work, or the above requirments, the contractor shall remove a minimum of 2 inches of asphalt from the pavement across the entire bike lane using a method approved by the City and resurface the bike lane to the satisfaction of the City.

APPROVED BY CITY ENGINEER			DATE
REVISIONS	BY	APP	DATE
Added Note 9	*RMH*	*WAP*	*9-95*
Change Note 8	*RMH*	*WAP*	*9-95*

city of san luis obispo — SIDEWALK INTEGRAL & DETACHED — 4110

CROSS GUTTER (4310)

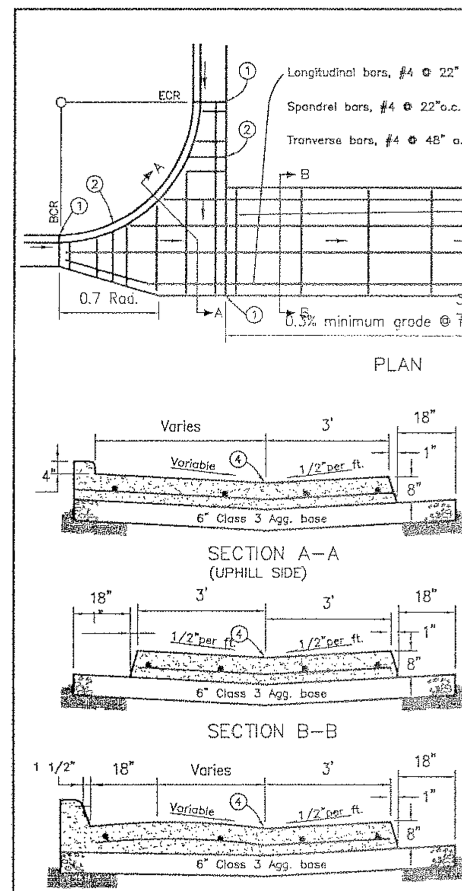

1. Standard expansion joint, see note 3
2. If curb return radius is 20 ft. or larger, spandrels shall have extra expansion joints at locations to be determined by the City Engineer. Rebar shall be cut and dowels installed per note 3.
3. All expansion joints shall have 18" smooth dowels @ 22" o.c., wrapped or greased.
4. All flowlines shall have an 8" wide steel-trowel finish.
5. All P.C.C. shall be Class A, including curb.
6. See standard drawing 4110 for notes regarding required pavement removal & repair.

THIS CROSS GUTTER SHALL BE USED WHERE TRAFFIC WOULD NORMALLY STOP OR YIELD

APPROVED BY CITY ENGINEER			DATE
REVISIONS	BY	APP	DATE
Redrawn To CAD	*RMH*	*MDW*	*1-95*
Change Note 6	*RMH*	*WAP*	*9-95*

city of san luis obispo — CROSS GUTTER — 4310

CORNER CURB RAMP (4441)

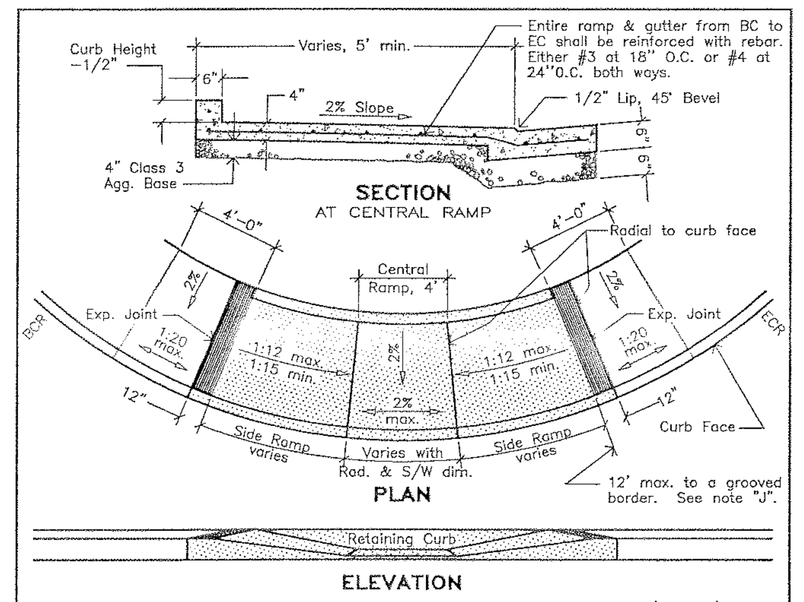

GENERAL NOTES:

A. Central ramp shall be a plane with 2% slope toward the street and no more than 2% cross-slope parallel to the street. Central ramp shall be a minumum of 4' wide and have a 1/2" lip at the gutter, beveled at 45° for the full width.
B. Side ramps shall slope 2% toward the street and no more than 1:12 toward the central ramp (measured halfway between curb and retaining curb).
C. Entire ramp shall have retaining curb along rear edge, flush with adjacent sidewalk, and following normal back-of-sidewalk grade.
D. Ramp shall be located at center of curb return. (See note E.)
E. This ramp design shall not be used without consideration for street grade and drainage. Due to unusual or difficult site conditions, the above requirements may be difficult or impossible to meet. Exceptions may be granted on an individual basis by the City Engineer.
F. Central and side ramps shall have a medium broom finish.
G. Concrete shall be Class B, 5-SACK, slump 2" minimum to 4" maximum.
H. Ramp shall have expansion joints at locations shown. Dowels at expansion joints shall be 1/2" smooth bars, 18" long at 24" o.c., to be sleeved or greased.
I. See standard drawing 4110 for notes regarding required pavement removal & repair.
J. Sidewalk at top of each side ramp shall have a 12" wide grooved border with grooves 3/4" apart (See Grooving Detail). If distance to top of ramp exceeds 12', place an additional grooved border at 12' from bottom. Grooves on slopes to be 1 1/2" apart.

APPROVED BY CITY ENGINEER			DATE
REVISIONS	BY	APP	DATE
Change Note L	*RMH*	*WAP*	*9-95*
Tooled Groove	*RMH*	*WAP*	*7-95*

city of san luis obispo — CORNER CURB RAMP (FOR 20' RADIUS & LARGER) — 4441

TRENCH DETAIL #2 (6025)

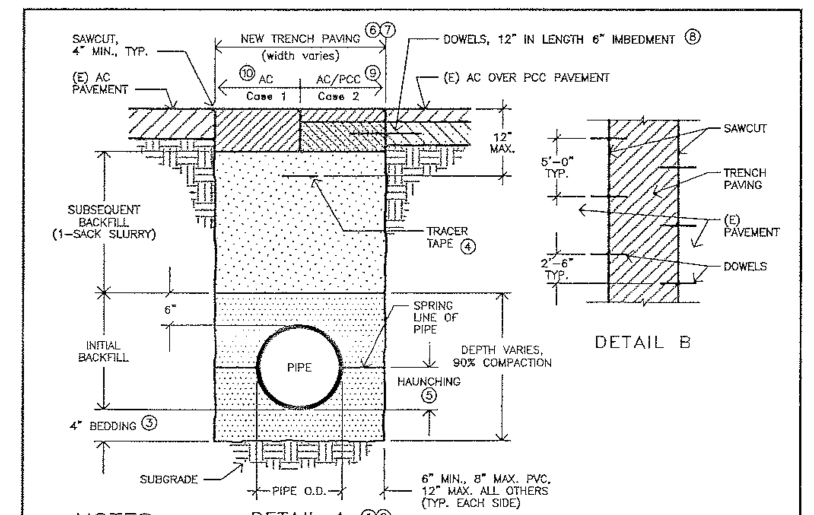

NOTES:

1. Trench shall be backfilled with select backfill material, leveled, and compacted to 6" above pipe. (See CITY STANDARD SPECIFICATIONS.) The remainder (subsequent backfill) shall be a plant-mixed 1-sack sand (cement) slurry, vibrated with 1" min. stinger.
2. Entire excavation may be backfilled with 2-sack slurry in lieu of initial select backfill upon approval from the City Engineer.
3. Bedding material shall be mechanically compacted to 90% prior to placement of pipe.
4. If non-metallic pipe is used, magnetic tracer tape shall be placed as shown above.
5. When PVC is used, pipe shall be backfilled to the spring line and compacted to 90% prior to completing initial backfill.
6. The streets of San Luis Obispo are generally paved with either AC, PCC, or a combination of the two. Unless clearly indicated on the plans, it is the contractor's responsibility to determine the nature of the paving material. (Case 1 – AC only, Case 2 – AC over PCC.)
7. Replacement pavement shall be "in kind" including seal coat, except as approved by the City Engineer.
8. All concrete street sections require 1/2" smooth steel dowels @ 5' o.c., each side of trench, staggered per Detail B above.
9. New PCC shall not be brought above existing PCC, shall be Class B, and shall be equal to existing PCC but not less than 8" thick.
10. When only AC is used, new AC shall be 2" thicker than existing AC and no less than 5" thick.
11. No longitudinal joints or seams are allowed in bike lanes. If a longitudinal joint may result due to the contractors work, or this requirment, the contractor shall remove a minimum of 2 inches of asphalt from the pavement across the entire bike lane using a method approved by the City and resurface the bike lane to the satisfaction of the City.

USE OF ANY OTHER STANDARD, SHALL BE APPROVED BY THE CITY ENGINEER.

APPROVED BY CITY ENGINEER			DATE
REVISIONS	BY	APP	DATE
1-Sack Slurry, Note 1	*RMH*	*MDW*	*1-96*
Add Note 11	*RMH*	*WAP*	*9-95*

city of san luis obispo — TRENCH DETAIL #2 (PAVED OR UNPAVED STREETS) — 6025

UTILITY COVER GRADE ADJUSTMENT P.C.C. COLLAR (6040)

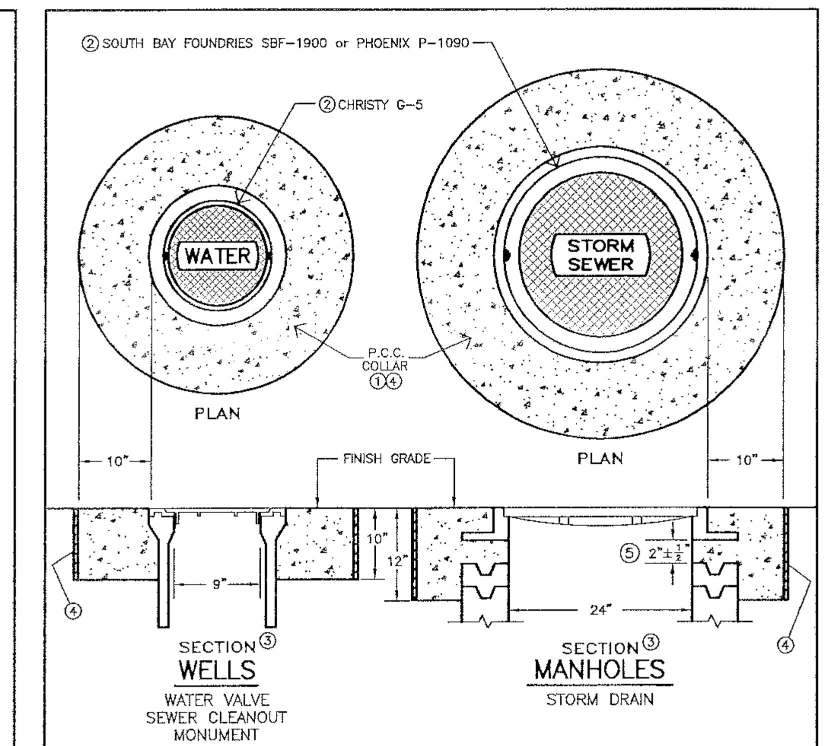

NOTES:

1. Concrete shall be Class "A" concrete, troweled to street grade, and allowed to cure for 48 hours prior to any traffic use. 7-sack concrete may be required to allow next-day traffic use.
2. All utility covers to be raised shall be replaced, if needed, to conform to covers specified above. Covers shall be imprinted with the appropriate utility name.
3. Depth and radius dimensions shown apply to similar covers that are not shown.
4. Collars constructed in P.C.C. streets shall be circular in shape and shall be separated from the adjacent P.C.C. street by either a cold joint or a tin form.
5. 2" clearance applies to the low side of the frame. Clearance may be greater on the high side as dictated by the street grades and as directed by the City Engineer.

APPROVED BY CITY ENGINEER			DATE
REVISIONS	BY	APP	DATE
Add Nt 4, Chg. Nt. 1	*RMH*	*WAP*	*9-95*
2.5" clearance	*BFL*	*WAP*	*1-96*

city of san luis obispo — UTILITY COVER GRADE ADJUSTMENT P.C.C. COLLAR — 6040

FIRE HYDRANT ASSEMBLY (6310)

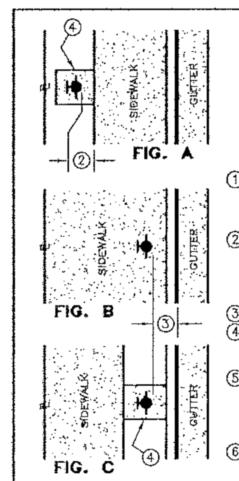

APPLICATION	OUTLETS 2 1/2"	OUTLETS 4 1/2"	HYDRANT
STANDARD HYDRANT	1	2	JONES 3770 or CLOW 2065
RESIDENTIAL * R-1 / R-2	2	1	JONES 3760 or CLOW 2050

* MAY BE USED ONLY WITH PERMISSION OF FIRE DEPT.

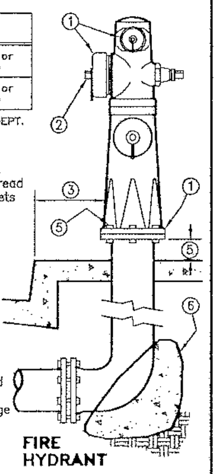

NOTES:

1. Hydrant shall have 6-hole flange and bronze caps. Outlets shall be 2 1/2" National Standard hose thread and 4 1/2" National Standard thread. 4 1/2" outlets shall point toward street.
2. Hydrant shall be located behind sidewalk if sufficient right-of-way exists (Fig. A), or behind curb (Fig. B, C). If located behind sidewalk, 12" minimum clearance shall be provided between back of sidewalk and outlet cap nut.
3. Standard setback from curb face, 18" – 21".
4. When located in unpaved area, hydrant installation shall include 4' x 4' x 6" minimum P.C.C. pad, doweled into curb and sidewalk, #4 @ 18"o.c.
5. Hydrant shall be installed to provide 3" min. to 4" max. clearance between underside of flange and sidewalk surface, and shall have 5/8" x 3" drilled breakaway bolts installed, with nuts on top of flange and bolts filled with silicone or butyl caulk.
6. Thrust block, Class B P.C.C., shielded from flanges and bolts.

NOTES (cont'd):

7. Anchoring tee-M.J. x M.J. x Swivel. If regular line run tee is used, a swivel x solid adapter (pup) shall be used (see ENGRG. STD. No. 6320)
8. Gate valve, M.J. x M.J., resilient seated with fully-encapsulated waterway, open to the left, non-rising stem with O-ring seals, AVK, CLOW F-1600, or approved equal, and shall conform to AWWA Standard C-509. (See ENGRG. STD. No. 6340)
9. See ENGRG. STD. No. 6340 for valve well & collar details.
10. Tapping sleeve – MUELLER H-610, M.J., Class 125, ROMAC SST – stainless steel, or approved equal.
11. Tapping valve – MUELLER H-667, M.J., O-ring type, Class 125.
12. Split in swivel gland shall be offset from split in tapping sleeve by one bolt position.
13. Laterals shall be PVC or ductile iron, 6" min. diameter.

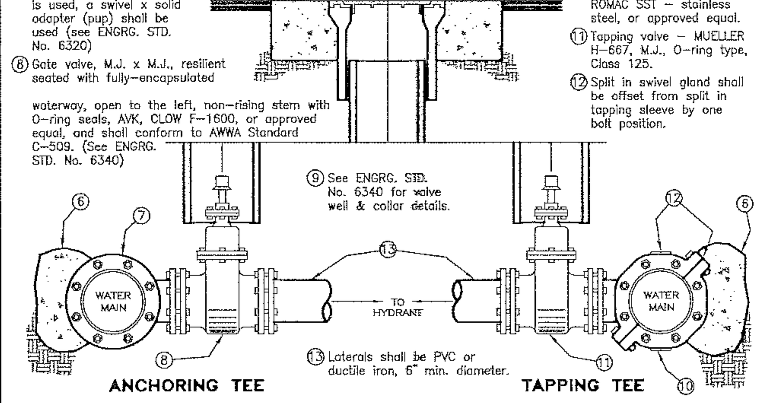

APPROVED BY CITY ENGINEER			DATE
REVISIONS	BY	APP	DATE
Redrawn To CAD	*RMH*	*MDW*	*5-94*
Expand Note 8	*RMH*	*MDW*	*3-96*

city of san luis obispo — FIRE HYDRANT ASSEMBLY — May 95 Edition — 6310

SEWER MANHOLE (6610)

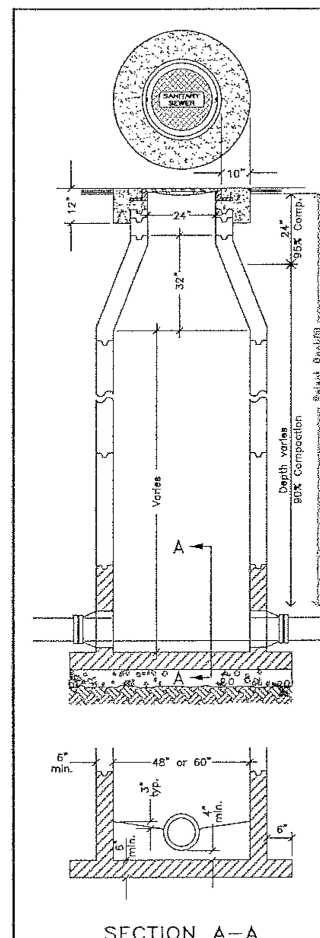

COVER:
Manhole frame and cover shall have a 24" clear opening and a sealed blind pickhole (SBF-1900 or approved equal). The cover shall be lettered "SANITARY SEWER". The inside of the frame shall be grouted with non-shrink grout.

ADJUSTMENT RINGS:
Rings shall be 3" or 6". Top of cone to top of frame shall not exceed 18". Grade rings and manhole frame shall be sealed at every joint with butyl rubber (CONSEAL CS-102 or equal). When proper grade cannot be achieved with standard grade rings, the manhole frame shall be suspended in position over the last grade ring, the inside of the frame and shaft shall be formed with tube or monoform system, and the concrete collar shall be poured to provide the joint between the manhole frame and the grade ring stock. Inside of rings shall be grouted with non-shrink grout.

COLLAR:
Collar shall be constructed per City Engineering Standard #6040.

CONE:
Cone shall be concentric and conform to the requirements for risers. Eccentric cones may be used only in special cases with the prior written approval of the Utilities Engineer.

MANHOLE RISERS:
Manhole risers shall be precast concrete conforming to ASTM C-478, and shall have a 6" min. wall thickness with minimal reinforcements. Manholes shall be 48" in diameter unless the size and/or number of inlet(s) and outlet(s) warrants the use of a 60" diameter manhole.

JOINTS:
Joints shall be set with butyl rubber sealant (RUB-R-NEK). Inside of joints shall be grouted with non-shrink grout.

BASE:
Manhole base shall be precast reinforced Class B concrete with extended base and conform to the requirements for manhole risers. All pipe connections shall be cored to fit flexible connectors (KOR-N-SEAL or equal) either by manufacturer or contractor using approved equipment. The precast base shall be bedded on a minimum of 6" of well graded crushed rock over native material that is either undisturbed or compacted to 95%.

INVERT:
Invert shall be completed in a single pour using Class B concrete with steel trowel finish. Any change in direction shall be a fixed radius curve extending from the inlet wall to the outlet wall. Inside surface of invert and area between pipe connection and channel shall be free from gaps, holes and sharp edges. All inlets shall be designed and installed such that the top of pipe elevations match as much as possible.

TESTING:
The manhole shall be inspected and vacuum-tested prior to placement of backfill, and again after backfill is completed and cover is set at grade. Upon 48 hours notice by contractor, City forces shall prepare the manhole and perform the test as follows:

All inlets to the manhole will be plugged, a test head will be placed in the top of the manhole and a seal inflated to seal off the manhole. A vacuum of 10 inches of mercury will be drawn on the manhole, and a time measured for the vacuum to drop to 9 inches of mercury. The manhole shall pass the test if the time for the vacuum drop meets or exceeds the value (in seconds) from the following table:

Manhole Depth (ft)	Diameter 48"	Diameter 60"
4	10	13
6	15	20
8	20	26
10	25	33
12	30	39
14	35	46
16	40	52
18	45	59
20	50	65

Should the manhole fail the test, it will be the Contractor's responsibility to make whatever repairs are necessary to make the manhole pass the vacuum test.

Crushed Rock Sieve Analysis	
100% Passing	1"
90-100% Passing	3/4"
20-55% Passing	3/8"
0-10% Passing	#4
0-5% Passing	#8

APPROVED BY CITY ENGINEER			DATE
REVISIONS	BY	APP	DATE
Change "Collar" Note	*RMH*	*WAP*	*9-95*
Shelf at spring line	*BFL*	*WAP*	*2-96*

city of san luis obispo — SEWER MANHOLE — 6610

SEWER MANHOLE ADJUSTMENT (6630)

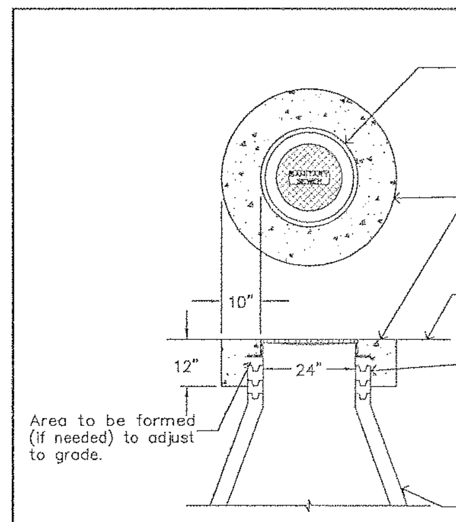

COVER (w/ blind pickhole)
Manhole frame and cover shall be SBF-1900 or approved equal, with a 24' clear opening, and the cover shall be lettered "SANITARY SEWER". Inside of frame shall be grouted.

COLLAR
Collar shall be constructed per City Engineer Standard #6040.

Pavement surface

ADJUSTMENT RINGS
Rings shall be 3" or 6". Inside of rings shall be grouted.
Use 6" concrete reducing rings in cases where existing manhole opening must be reduced to accommodate the new frame and cover.

(E) Manhole cone

NOTES:

- Inside surface of manholes shall be grouted to obtain a smooth surface free from gaps, holes and sharp edges.
- Use 3" or 6" adjustment rings as needed to adjust size and to adjust manhole frame and lid to new street surface.
- Completely remove existing concrete collar prior to pouring new concrete collar. The diameter of the new collar shall be equal to the existing collar or the minimum diameter specified in the above detail, whichever is larger. See City Engineering Standard #6040.
- Grade rings shall be sealed at every joint with butyl rubber, (RUB-R-NEK, CONSEAL CS-101, or equal). If grade cannot be obtained to the existing surface with a standard grade ring and rubber sealant, the manhole frame shall be suspended in position over the last grade ring, the inside of the frame and shaft shall be formed with sonotube or monoform system, and the concrete collar shall be poured to provide the joint between the manhole frame and the grade ring stack. The inside of the rings shall be grouted with non-shrink grout.

APPROVED BY CITY ENGINEER			DATE
REVISIONS	BY	APP	DATE
New Standard	*RMH*	*MDW*	*10-93*
Change "Collar" Notes	*RMH*	*WAP*	*9-95*

city of san luis obispo — SEWER MANHOLE ADJUSTMENT — 6630

ASPHALT BERM, 6" (7120)

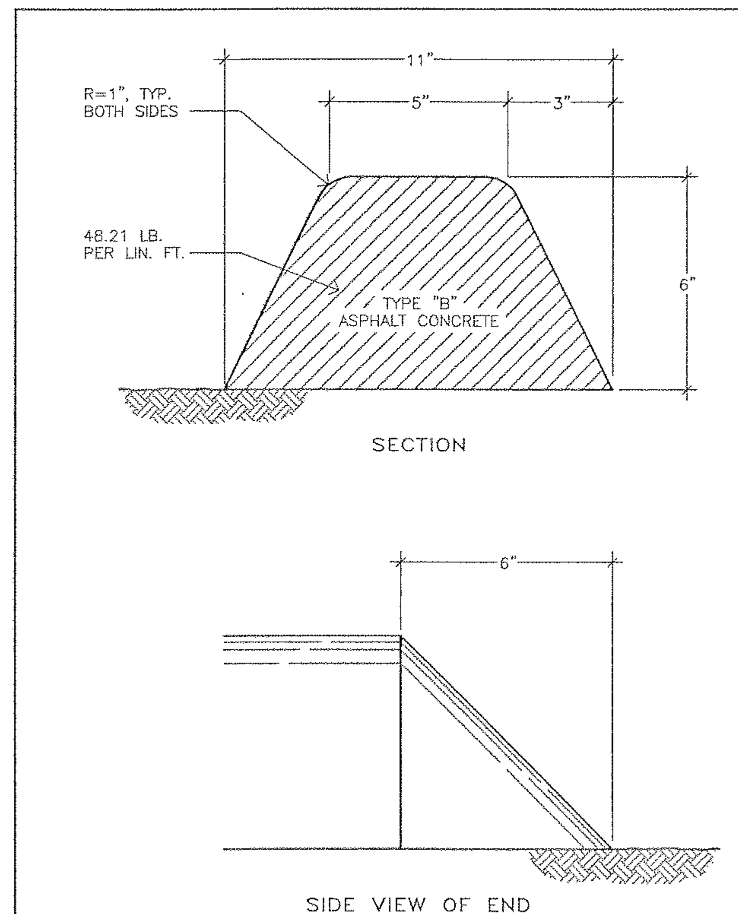

APPROVED BY CITY ENGINEER			DATE
REVISIONS	BY	APP	DATE
Redrawn to CAD	*JDL*	*MDW*	*10-93*

city of san luis obispo — ASPHALT BERM, 6" — May 95 Edition — 7120

STREET NAME SIGN (7240)

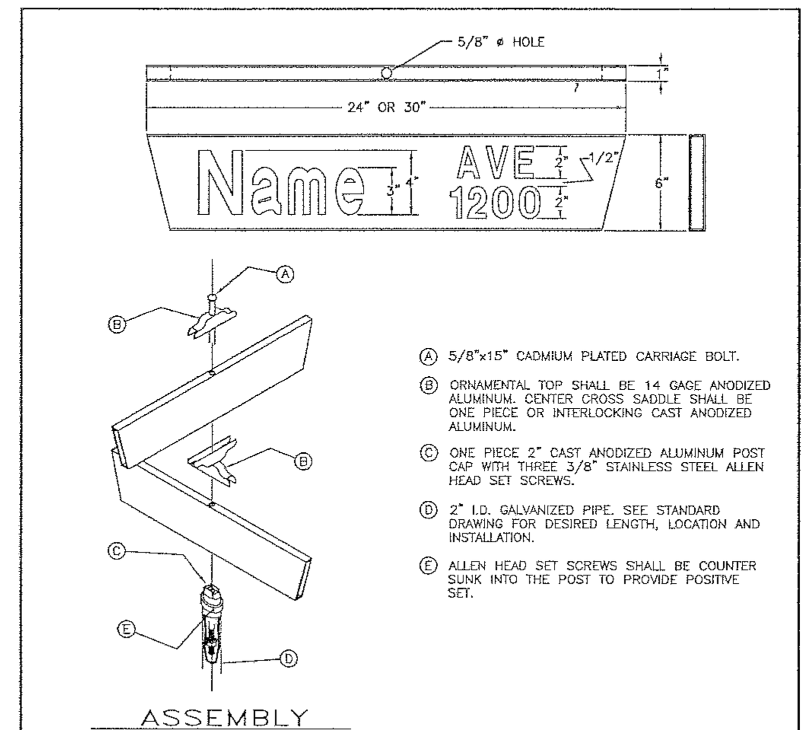

A. 5/8"x15" CADMIUM PLATED CARRIAGE BOLT.
B. ORNAMENTAL TOP SHALL BE 14 GAGE ANODIZED ALUMINUM. CENTER CROSS SADDLE SHALL BE ONE PIECE OR INTERLOCKING CAST ANODIZED ALUMINUM.
C. ONE PIECE 2" CAST ANODIZED ALUMINUM POST CAP WITH THREE 3/8" STAINLESS STEEL ALLEN HEAD SET SCREWS.
D. 2" I.D. GALVANIZED PIPE. SEE STANDARD DRAWING FOR DESIRED LENGTH, LOCATION AND INSTALLATION.
E. ALLEN HEAD SET SCREWS SHALL BE COUNTER SUNK INTO THE POST TO PROVIDE POSITIVE SET.

NOTES

1. EACH FOUR-WAY UNIT SHALL CONSIST OF TWO DOUBLE FACE SIGNS MOUNTED AT RIGHT ANGLES WITH ONE ANOTHER, ASSEMBLED AS SHOWN.
2. SIGN SHALL BE GREEN-ANODIZED ALUMINUM EXTRUSION OF 6063T-4 ALLOY MATERIAL. ALL ANODIZING SHALL CONFORM WITH ALUMILITE SPECIFICATION #215-R1.
3. SIGN FACES SHALL BE BROWN HIGH-INTENSITY REFLECTIVE SHEETING, WITH WHITE LETTERING APPLIED IN ACCORDANCE WITH MANUFACTURER'S SPECIFICATIONS.
4. USE 3" LOWER CASE LETTERING AFTER FIRST LETTER OF WORD.
5. REFLECTIVE SHEETING SHALL CONFORM TO CALIFORNIA DEPARTMENT OF TRANSPORTATION SPECIFICATIONS.

APPROVED BY CITY ENGINEER			DATE
REVISIONS	BY	APP	DATE
New Standard	*RMH*	*MDW*	*2-95*

city of san luis obispo — STREET NAME SIGN — May 95 Edition — 7240

BAT ROOST DETAIL

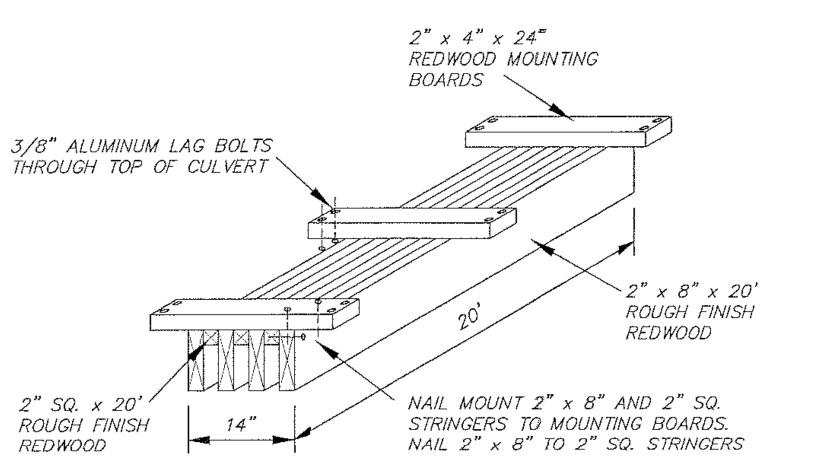

BAT ROOST DETAIL
-nts-

R R M D E S I G N G R O U P
RECORD DRAWINGS
VILLAS AT ISLAY CREEK
TRACT 1750 PHASE IV
PLANS PREPARED UNDER THE SUPERVISION OF
(Limited by Business & Professions Code 6735.6(b))

GERALD L. MICHAEL R.C.E. 36895 — DATE 9/15/00

R R M D E S I G N G R O U P
Architecture · Planning · Engineering · Surveying · Interiors · Landscape Architecture
3701 South Higuera Street, San Luis Obispo, California 93401 805/543-1794
131 South Second Avenue, Oakdale, California 95354 209/847-1794
Vic Montgomery, Architect C011090 · Jerry Michael, RCE 36895, LS 6276 · Jeff Ferber, Landscape Architect 2844

PUBLIC IMPROVEMENT PLANS FOR:
Tract 1750
Orcutt Road Improvements
DETAIL SHEET

ENGINEER OF RECORD: REGISTERED PROFESSIONAL ENGINEER GERALD L. MICHAEL No. 36895 exp. 6/30/00 CIVIL STATE OF CALIFORNIA — DATE: 3/20/97

ASSISTANT CITY ENGINEER APPROVAL: REGISTERED PROFESSIONAL ENGINEER GERALD W. KENNY No. 36695 exp. 6/30/00 CIVIL STATE OF CALIFORNIA — DATE: 5-6-97

DATE	△	REVISIONS DESCRIPTION	APPROVAL DESIGN ENGR.	APPROVAL CITY
6/00	1	AS-BUILT REVISIONS		

DRAWN BY:	CHECKED BY:	JOB NO.	SHEET
MAP	TJW	E96806	6 OF 7

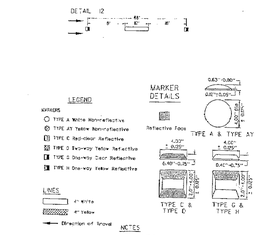

STATE OF CALIFORNIA
DEPARTMENT OF TRANSPORTATION
PAVEMENT MARKERS AND TRAFFIC LINES
TYPICAL DETAILS
NO SCALE
A20A

STATE OF CALIFORNIA
DEPARTMENT OF TRANSPORTATION
PAVEMENT MARKERS AND TRAFFIC LINES
TYPICAL DETAILS
NO SCALE
A20D

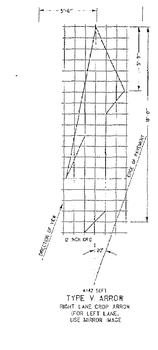

NOTE:
WHICH VARIATIONS IN DIMENSIONS MAY BE ACCEPTED BY THE ENGINEER.

STATE OF CALIFORNIA
DEPARTMENT OF TRANSPORTATION
PAVEMENT MARKINGS
ARROWS
NO SCALE
A24A

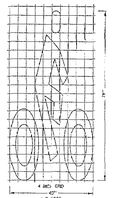

STATE OF CALIFORNIA
DEPARTMENT OF TRANSPORTATION
PAVEMENT MARKINGS
SYMBOLS AND NUMERALS
NO SCALE
A24C

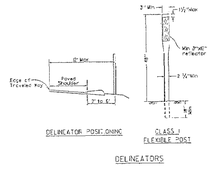

STATE OF CALIFORNIA
DEPARTMENT OF TRANSPORTATION
DELINEATORS, CHANNELIZERS
AND BARRICADES
NO SCALE
A73C

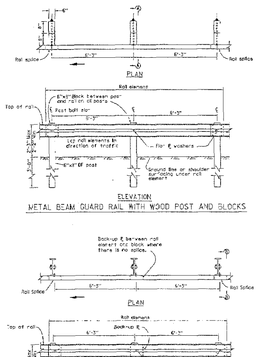

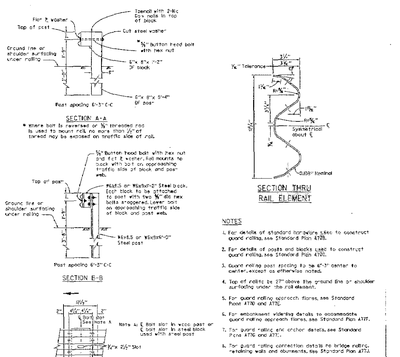

NOTES
1. For details of standard corrugated steel to construct guard railing, see Standard Plan A78B.
2. For details of posts and blocks used to construct guard railing, see Standard Plan A78D.
3. Guard railing post spacing to be 6'-3" center to center, except as otherwise noted.
4. Top of rail to be 27" above the ground line or shoulder surfacing under the rail element.
5. For guard railing approach flares, see Standard Plan A76 and A77C.
6. For embankment widening details to accommodate guard railing approach flares, see Standard Plan A77F.
7. For guard railing end anchor details, see Standard Plans A76 and A77J.
8. For guard railing connection details to bridge railing, retaining walls and abutments, see Standard Plan A77G.
9. For guard railing connection details to bridge abutments and curbs, see Standard Plan A77K.
10. For site positioning with guard railing transitions, see Standard Plan A77F.
11. Direction of traffic indicated by ⟵

STATE OF CALIFORNIA
DEPARTMENT OF TRANSPORTATION
METAL BEAM GUARD RAILING
NO SCALE
A77A

NOTES
1. Posts, blocks and hardware to be used are shown on Standard Plans A77B and A77C.
2. Guard railing post spacing to be 6'-3" center to center, except as otherwise noted.
3. Except as noted, posts shown are 6"x8"x0'-9", Mark3, or W6x9 steel posts and blocks may be specified for 5'x8"x0'-8" posts and blocks where applicable. Where 6"x8"x0'-9" posts and 5"x8"x0'-8" blocks are shown, W6x9 steel posts and Tubular Steel 5"x8"x'-2" (SBTS) 7-block/posts may be substituted where applicable.
4. Top of rail to be 27" above ground line or shoulder surfacing under the rail element.
5. Direction of traffic indicated by ⟵
6. For connection details see Standard Plan A77J or A77L.
7. For end anchor details see Standard Plan A77G and A77J.
8. Terminal Sections will not be installed on trailing end of guard rail placed adjacent to exclusive bikeways.
9. For skew number of Type 1 Flare used at approach and at guard railing for embankment protection.
10. For embankment widening details to accommodate approach flares, see Standard Plan A77F.
11. Sand filled crash cushion, as shown on Standard Plan A81, or other crash cushion approved by the Engineer is required for Type 2.3 and 4 flares when the end of the guard rail is within 30 feet of the edge of traveled way (EW) of approaching traffic.

STATE OF CALIFORNIA
DEPARTMENT OF TRANSPORTATION
GUARD RAIL FLARES
NO SCALE
A77D

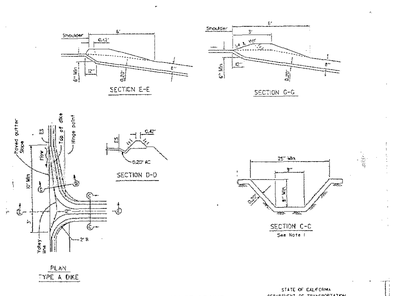

STATE OF CALIFORNIA
DEPARTMENT OF TRANSPORTATION
OVERSIDE DRAINS
NO SCALE
D87B

Revisions				Approvals		
Descriptions	By	Approved	Date	Director of Public Works		Date
				Engineering & Road Dept.		

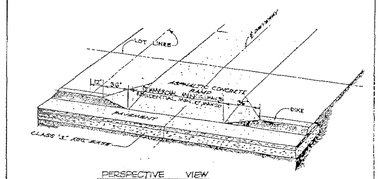

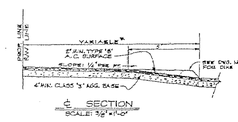

* PAVING MAY BE REQUIRED BEYOND THIS R/W LINE IF NECESSARY TO CONTROL SLOPING OF THE GUTTER.

Specification Ref.	County of San Luis Obispo Engineering Department	Scale: NOTED ABOVE
Approved: R.C.E.	DRIVEWAYS (ASPHALT CONC.)	Drawing No. B-4

RRM DESIGN GROUP
RECORD DRAWINGS
VILLAS AT ISLAY CREEK
TRACT 1750 PHASE IV
PLANS PREPARED UNDER THE SUPERVISION OF
(Limited by Business & Professions Code 6735.6(b))

8/15/00
GERALD L. MICHAEL R.C.E. 36695 DATE

RRM DESIGN GROUP
Architecture · Planning · Engineering · Surveying · Interiors · Landscape Architecture
3765 South Higuera Street, San Luis Obispo, California 93401 805/543-1794
131 South Second Avenue, Oakdale, California 95361 209/847-1794
Joe Montgomery, Architect C011090 · Jerry Michael, PCE 36695, LS 6276 · Jeff Farber, Landscape Architect 2944

PUBLIC IMPROVEMENT PLANS FOR:
Tract 1750
Orcutt Road Improvements
CALTRANS DETAIL SHEET

ENGINEER OF RECORD: REGISTERED PROFESSIONAL ENGINEER GERALD L. MICHAEL No. 36695 exp. 6/30/00 CIVIL STATE OF CALIFORNIA
DATE: 8/15/00

ASSISTANT CITY ENGINEER APPROVAL: REGISTERED PROFESSIONAL ENGINEER GERALD W. YORK No. 36695 exp. 6/30/00 CIVIL STATE OF CALIFORNIA
DATE: 5-6-97

DATE	REVISIONS DESCRIPTION	APPROVAL COUNTY ENGR.	APPROVAL CITY
8/00	AS-BUILT REVISIONS		

DRAWN BY: HK | CHECKED BY: TJW | JOB NO. E96806 | SHEET 7 OF 7

GENERAL STRUCTURAL NOTES

GENERAL

1. The Contractor shall verify all dimensions and conditions at the job site prior to starting construction. Notify the Engineer immediately if any discrepancies or inconsistencies are found.

2. Details shown on the structural drawings are typical. Similar details apply to similar conditions. In the event certain aspects of the work are not fully detailed on the drawings or specified in these structural notes, the construction shall be of the same character as for similar conditions that are shown or specified and shall be reviewed by the Engineer.

3. Existing conditions shown on these drawings are to be field verified by the Contractor as the work progresses. Notify the Engineer immediately if existing conditions are discovered which are different than those shown. Construction shall not proceed until written instructions have been received from the Engineer.

4. Notes and details on the drawings shall take precedence over these general notes and typical details. Dimensions shown on the drawings shall take precedence over scale.

5. These structural drawings and general notes represent the finished structure. Unless otherwise indicated, they do not specify the method of construction. The Contractor shall provide all measures necessary to protect the structure, workmen and other persons during construction. Such measures shall include, but not be limited to, bracing of sufficient strength and stiffness to resist all loads, including wind and seismic loads, imposed on all elements of the structure; shoring for construction equipment, earth banks and retaining walls; forms, scaffolding and planking. These protective measures are the sole responsibility of the Contractor and site visits by the Engineer shall not include observation of same.

6. Openings, pockets, etc. shall not be placed in slabs, foundations, walls, etc. unless specifically detailed on the structural drawings.

7. All phases of the work shall conform to the minimum standards of the 1994 Uniform Building Code (U.B.C.), these structural notes, and all local ordinances.

8. All ASTM specifications noted on these drawings or general notes shall be of the latest revision.

9. Special inspection in accordance with Section 1701 of the U.B.C. shall be provided by a qualified person who is acceptable to the Engineer and Building Department for the following types of work:
   a) Concrete placing.
   b) Reinforcing steel placing.

10. The contractor shall contact the Engineer a minimum of 24 hours prior to reaching the following stages of the work.
    a) Placing of concrete.
    b) All structural work completed.

FOUNDATION

1. Foundation design based on soil investigation by Terratech, Inc. Report No. 304006, dated October 1996.

2. Allowable soil bearing values and foundation design are based on soil conditions shown by test borings. Actual soil conditions which deviate appreciably from that shown in the test borings or buried structures found during earthwork operations shall be reported to the Engineer immediately.

3. All site work and grading shall be done in accordance with the Soil Investigation Report.

4. Excavations for foundations shall conform to the lines and dimensions shown on the drawings. Remove all loose material and debris from excavations and de-water excavations as required to maintain dry working conditions. The Soils Engineer shall approve all site work and foundation excavations prior to installing reinforcing steel or placing concrete.

5. The Soils Engineer shall approve all backfill materials prior to placement and observe backfill operations. All backfill operations shall be in strict accordance with the requirements of the arch culvert manufacturer. No backfill materials shall be placed behind retaining walls until they have been properly cured for a minimum of 14 days and reached specified design strength.

6. The bottom of all footings shall be horizontal. Where adjoining footings bear at different elevations the bottom of the footings shall be stepped as detailed on the drawings. The bottom of the arch culvert footings may be sloped as shown on the drawings.

CONCRETE

1. All concrete work shall be performed in accordance with the latest edition of the ACI Building Code (ACI 318) and the latest edition of the ACI Manuals of Concrete Practice.

2. Submit concrete mix designs to Engineer for review. Mix designs shall be prepared under the supervision of a Civil Engineer registered in the State of California and bear his signature.

3. Concrete strength: 3000 psi @ 28 days.

4. Minimum cement content: 5.3 sacks per yard.

5. Maximum water-cement ratio: 7 gal. per sack.

6. Aggregate size: 1". Provide the maximum ratio of coarse aggregate to fine aggregate consistent with placing requirements, minimum 60% coarse aggregate.

7. Maximum slump: 4-1/2" per ASTM C143.

8. Concrete materials:
   a) Cement: Portland Type II, ASTM C150.
   b) Coarse aggregate: ASTM C33.
   c) Fine aggregate: ASTM C33. Reactivity ratio Sc/Rc shall not exceed one (1) per ASTM C289.
   d) Water: potable.
   e) Ready mixed concrete: ASTM C94.
   f) Water reducing admixture: Daracem 55 at the rate of 8 oz. per sack.
   g) Air entraining admixture: MBVR or Darex of strength required to provide between 3-1/2% and 5% of entrained air.

9. Reinforcing materials:
   a) #4 bars and smaller: ASTM A615 Grade 40 or Grade 60.
   b) #5 bars and larger: ASTM A615 Grade 60.
   c) Reinforcing for welded inserts: ASTM A706. All bars to be welded shall be marked with a W to designate weldability.

10. Miscellaneous materials:
    a) Non shrink grout and/or drypack: MinWax Por-Rok or approved equal. Mix with the minimum amount of water required to obtain the consistency necessitated by placing conditions.
    b) Curing compounds: Water based liquid membranes conforming to ASTM C309 when tested in accordance with ASTM C156: Euco Aqua-Cure or approved equal.
    c) Expansion joint material: Conform to ASTM D-1751.

11. Welding of reinforcing steel: Reinforcing steel shall not be welded unless specifically detailed on the drawings or directed by the Engineer. All welding of reinforcing steel shall be in accordance with the latest edition of "Recommended Practice for Welding Reinforcing Steel, Metal Inserts, and Connections in Reinforced Concrete Construction" by the AWS (AWS D1.4). Use low hydrogen E80xx or E90xx electrodes for welding of reinforcing steel.

12. Lap splices shall conform to the following:
    a) Vertical wall reinforcing and transverse footing reinforcing:
       i) #4 bars: 2'-0"
       ii) #5 bars: 2'-6"
       iii) #6 bars: 3'-0"
       iv) #7 bars: 4'-0"
       v) #8 bars: 5'-0"
    b) All other bars: 40 bar diameters or 1'-6", whichever is greater.

13. Cover to bars:
    a) When concrete is placed against ground: 3".
    b) When concrete is placed against forms but after form removal will be in contact with ground or weather:
       i) #5 bars and smaller: 1-1/2"
       ii) #6 bars and larger: 2"
    c) All others: 1-1/2".

14. Concrete curing: Keep concrete continuously wet for 7 days or apply curing compound in strict accordance with manufacturer's printed instructions.

15. Form removal: Remove forms in accordance with the following schedule:
    a) Side forms of footings: Minimum 2 days.
    b) Edge forms of slab on grade strips: Minimum 1 day.
    c) Walls and columns: Minimum 10 days.

16. Vibration: Vibrate all concrete in place with a mechanical vibrator used by experienced personnel.

17. Shop drawings: Submit to the Engineer for review. No reinforcing shall be placed until reviewed shop drawings have been received on the job. Shop drawings shall consist of both cut and placing sheets. Placing sheets shall contain all information required to position all reinforcing steel without having to refer to the structural drawings.

18. Outside diameter conduit or pipe embedded in slab shall not exceed 30% of slab thickness, or 1-1/2", whichever is smaller, unless specifically detailed otherwise. All conduits or pipes larger than the 1-1/2" or 30% slab thickness (O.D.) shall be placed under the slab. Conduits can be grouped in pairs. Minimum clear distance between single conduits or pairs shall be 6".

19. Projecting corners of walls, beams, columns, etc. shall be formed with a 3/4" chamfer unless detailed otherwise.

20. Testing:
    a) Laboratory: The Owner shall retain and pay for the services of a Testing Laboratory where samples will be tested in accordance with these structural notes and the applicable standards of the ASTM. Work under this division (to be performed by the Contractor) includes the taking and storage of samples and their delivery to the laboratory.
    b) Samples: Make 3 test cylinders for each day's pour.
    c) Testing of samples: Test each batch of 3 cylinders as follows: 1 at 7 days, and 2 at 28 days.
    d) Test reports: A copy of all test reports shall be submitted to the Engineer.

PRE-CAST CONCRETE ARCH CULVERT

1. Arch Culvert as manufactured by CONSPAN Bridge Systems or approved equal.

2. The Arch Culvert manufacturer shall submit complete shop drawings and engineering calculations to the Engineer for review prior to fabrication. The shop drawings and calculations shall be prepared under the supervision of and signed by a Civil Engineer registered in the State of California. Shop and erection drawings shall contain all information required to install the culverts without having to refer to the structural drawings.
   a) Calculations shall clearly show the horizontal and vertical footing reactions per foot of length.

STRUCTURAL STEEL AND MISC METALS

1. Materials:
   a) Structural steel: ASTM A36.
   b) Pipe columns: ASTM A53 Grade B.
   c) Tubular shapes: ASTM A500 Grade B.
   d) Nuts and bolts: ASTM A307.
   e) Welded headed studs: ASTM A108.
   f) High strength nuts and bolts: ASTM A325.
   g) Welding rod: Heavily coated, low hydrogen, E70xx, conforming to American Welding Society "Specification for Arc Welding Electrodes."

2. Installation of high strength bolts: In accordance with AISC "Specification for Structural Joints Using ASTM A325 or A490 Bolts" turn-of-nut method.

3. Full penetration welds: Conform to AWS D1.1 "Pre-qualified Complete Joint Penetration Groove Welded Joints."

4. Copes and weld access holes shall conform to AWS D1.1 for tension regions at all locations.

5. Galvanizing: Galvanize all miscellaneous iron angles, clips, and other elements exposed to weather.

6. Shop drawings: Submit to the Engineer for review. Shop and erection drawings shall contain all information required to install all structural steel without having to refer to the structural drawings.

WALL DRAINAGE REQUIREMENTS
(REPRINTED FROM THE GEOTECHNICAL INVEST.)

October 14, 1996 Project 304006

~~should be taken into account through design.~~

3) The above-recommended pressures are based on the assumption that sufficient subsurface drainage will be provided behind the walls to prevent the build-up of hydrostatic pressure. To achieve this we recommend that a filter material be placed behind all proposed walls. The blanket of filter material should be a minimum of 12 inches thick and should extend from the bottom of the wall to within 12 inches of the ground surface. The top 12 inches should consist of water conditioned, compacted, native clayey soil. A 4-inch diameter drain pipe should be installed near the bottom of the filter blanket with perforations facing down. The drain pipe should be underlain by at least 4 inches of filter type material. Adequate gradients should be provided to discharge water that collects behind the retaining wall to an adequately controlled discharge system with suitably projected outlets. The filter material should conform to Class I, Type B permeable material as specified in Section 68 of the California Department of Transportation Standard Specifications, current edition. A typical 1" x #4 concrete coarse aggregate mix approximates this specification.

CITY OF SAN

REGISTERED PROFESSIONAL ENGINEER
KEVIN T. DEVANEY
NO. 38053
Exp. 3-31-01
CIVIL
STATE OF CALIFORNIA

REVISIONS

NO.	DATE:

CONCRETE ARCH CULVERTS
TRACT 1750 SAN LUIS OBISPO, CA
for R.W. HERTEL & SONS

GENERAL STRUCTURAL NOTES

THESE DRAWINGS AND THE DESIGN REPRESENTED THEREBY ARE THE PROPERTY OF THE DEVANEY COMPANY AND NO PART SHALL BE COPIED OR USED IN CONNECTION WITH ANY OTHER PROJECT WITHOUT THE WRITTEN CONSENT OF THE DEVANEY COMPANY

THE DEVANEY COMPANY
CONSULTING ENGINEERS
1390 SAWLEAF COURT SAN LUIS OBISPO, CA 93401
(805) 434-2219

DATE: 13 JUL 98
DRAWN BY: GDW
CHECKED BY: K.T.D.
PROJECT NO.: 9806

SHEET NO.
S-0
OF 9

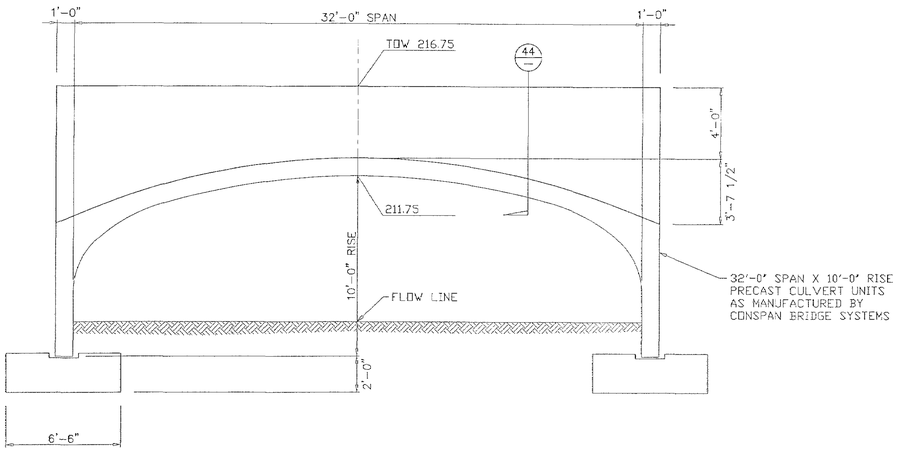

NORTH ELEVATION

SCALE: 1/4" = 1'-0"

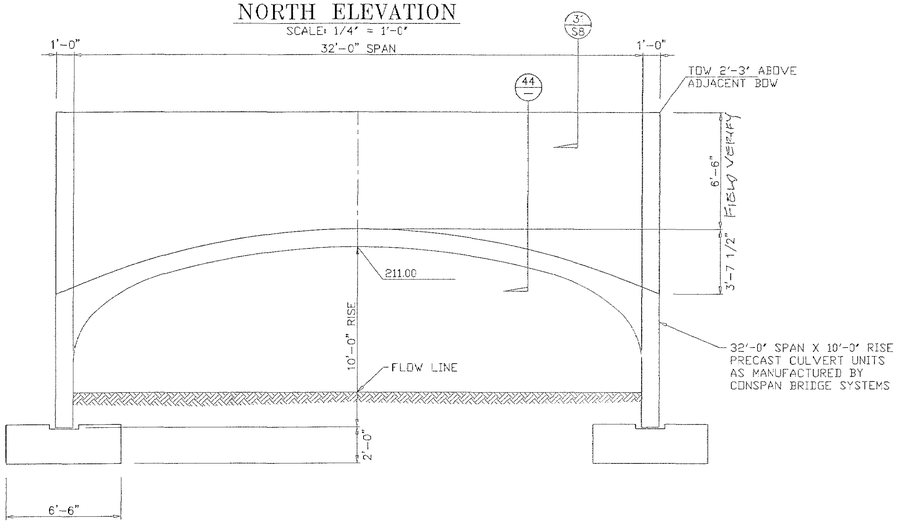

SOUTH ELEVATION

SCALE: 1/4" = 1'-0"

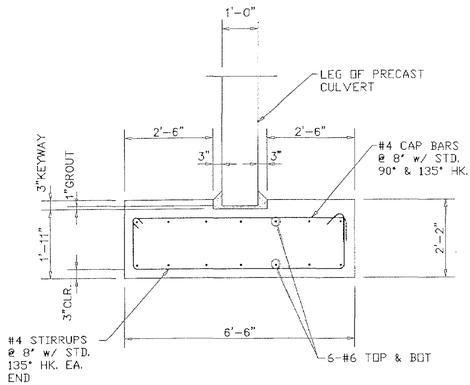

54 SECT. @ CULVERT FTG.

SCALE: 1/2" = 1'-0"

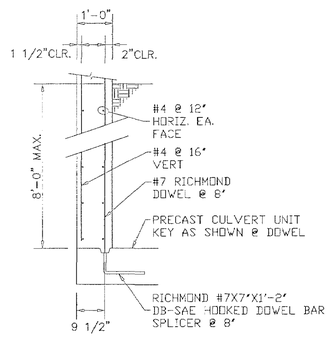

44 HEADWALL DETAIL

SCALE: 1/2" = 1'-0"

NOTE:

1. MANUFACTURER TO SUBMIT SHOP DRAWINGS FOR PRECAST CULVERTS PRIOR TO CONSTRUCTION.

2. PRIOR TO REQUESTING A FOUNDATION INSPECTION BY THE CITY, THE CONTRACTOR SHALL OBTAIN A LETTER FROM THE SOILS ENGINEER STATING THAT:

a. THE UTILITY TRENCHES HAVE BEEN PROPERLY BACKFILLED AND COMPACTED.

b. THE FOUNDATION EXCAVATIONS, SOILS EXPANSIVE CHARACTERISTICS AND BEARING CAPACITY CONFORM TO THE SOILS REPORT.

3. EXISTING AND NEW CONTOURS SHOWN HEREON ARE FOR INFORMATION ONLY. SEE GRADING AND DRAINAGE PLAN BY RRM DESIGN GROUP.

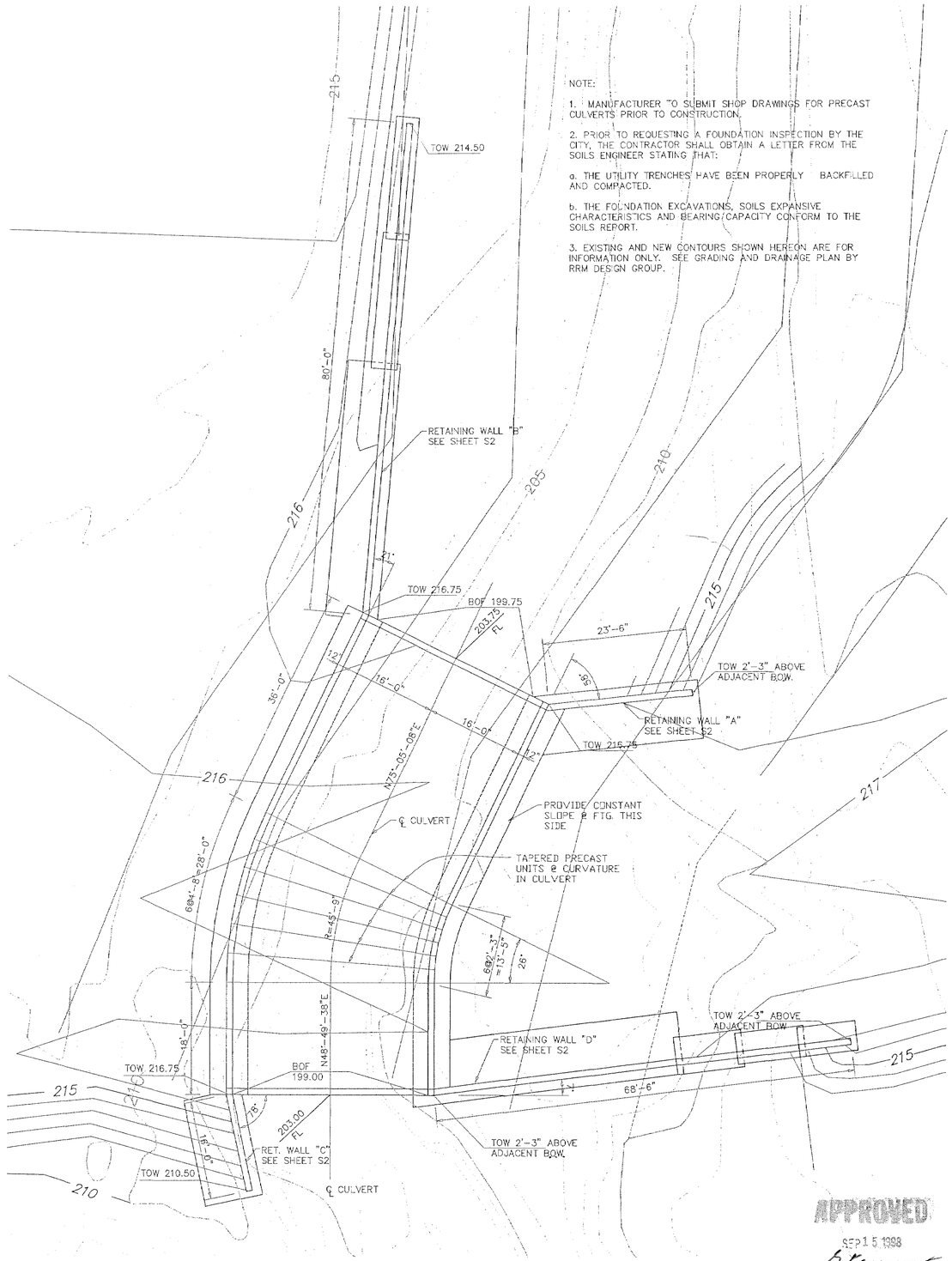

ARCH CULVERT PLAN–SPANISH OAKS DRIVE

1"=10'-0"

APPROVED
SEP 15 1998
ENGINEERING DIVISION
CITY OF SAN LUIS OBISPO

REGISTERED PROFESSIONAL ENGINEER
KEVIN T. DEVANEY
NO. 38053
Exp. 3-31-01
CIVIL
STATE OF CALIFORNIA

REVISIONS

NO.	DATE:

CONCRETE ARCH CULVERTS

TRACT 1750 SAN LUIS OBISPO, CA
for R.W. HERTEL & SONS

CULVERT PLAN & ELEVATIONS
SPANISH OAKS DRIVE

THESE DRAWINGS AND THE DESIGN REPRESENTED THEREBY ARE THE PROPERTY OF THE DEVANEY COMPANY AND NO PART SHALL BE COPIED OR USED IN CONNECTION WITH ANY OTHER PROJECT WITHOUT THE WRITTEN CONSENT OF THE DEVANEY COMPANY

THE DEVANEY COMPANY
CONSULTING ENGINEERS
1390 SAWLEAF COURT SAN LUIS OBISPO, CA 93401
(805) 434-2219

DATE: 13 JUL 98
DRAWN BY: GDW
CHECKED BY: K.T.D.
PROJECT NO.: 9806

SHEET NO.
S-1
OF 19

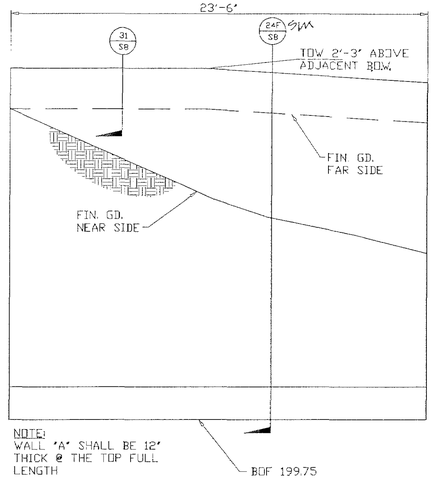

RETAINING WALL "A" ELEVATION–
VIEWED FROM THE CREEK CHANNEL

Scale: 1"=4'

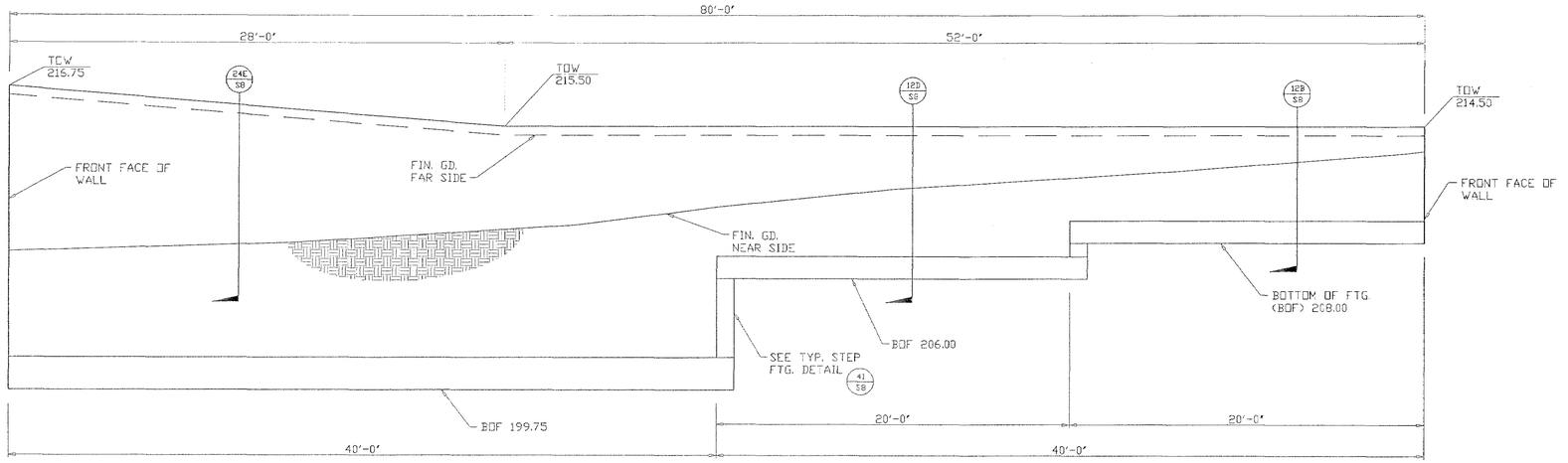

RETAINING WALL "B" ELEVATION–VIEWED FROM THE CREEK CHANNEL

Scale: 1"=4'

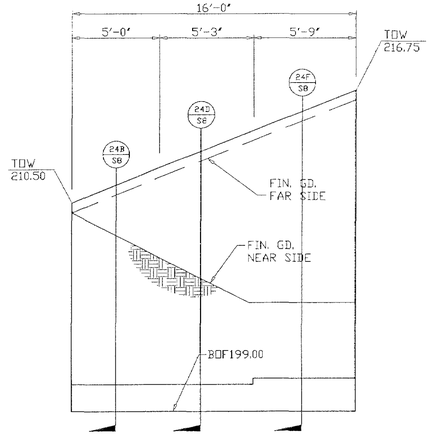

RETAINING WALL "C" ELEVATION–
VIEWED FROM THE CREEK CHANNEL

Scale: 1"=4'

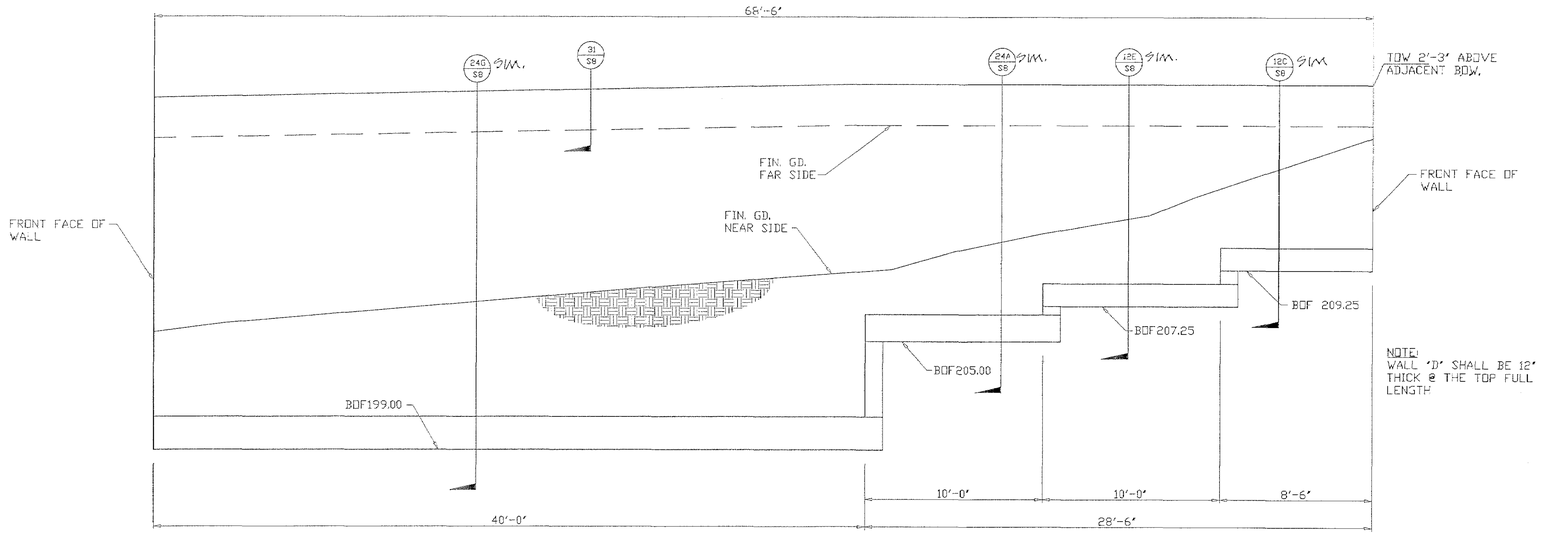

RETAINING WALL "D" ELEVATION–VIEWED FROM THE CREEK CHANNEL

Scale: 1"=4'

APPROVED
SEP 15 1993
ENGINEERING DIVISION
CITY OF SAN LUIS OBISPO

REGISTERED PROFESSIONAL ENGINEER
KEVIN T. DEVANEY
NO. 38053
Exp. 3-31-01
CIVIL
STATE OF CALIFORNIA

REVISIONS

NO.	DATE:

CONCRETE ARCH CULVERTS

TRACT 1750 SAN LUIS OBISPO, CA
for R.W. HERTEL & SONS

RETAINING WALL ELEVATIONS
SPANISH OAKS DRIVE

THESE DRAWINGS AND THE DESIGN REPRESENTED THEREBY ARE, AT ALL TIMES, THE PROPERTY OF THE OWNER, COMPANY AND NO PART SHALL BE COPIED, DISCLOSED TO OTHERS OR USED IN CONNECTION WITH ANY WORK OR PROJECT OTHER THAN THE SPECIFIED PROJECT FOR WHICH THEY HAVE BEEN PREPARED AND DEVELOPED WITHOUT THE WRITTEN CONSENT OF THE DEVANEY COMPANY.

THE DEVANEY COMPANY
CONSULTING ENGINEERS
1390 SAWLEAF COURT SAN LUIS OBISPO, CA 93401
(805) 434-2219

DATE: 15 JUL 93
DRAWN BY: GDW
CHECKED BY: K.T.D.
PROJECT NO: 9306

SHEET NO.
S-2
OF 19

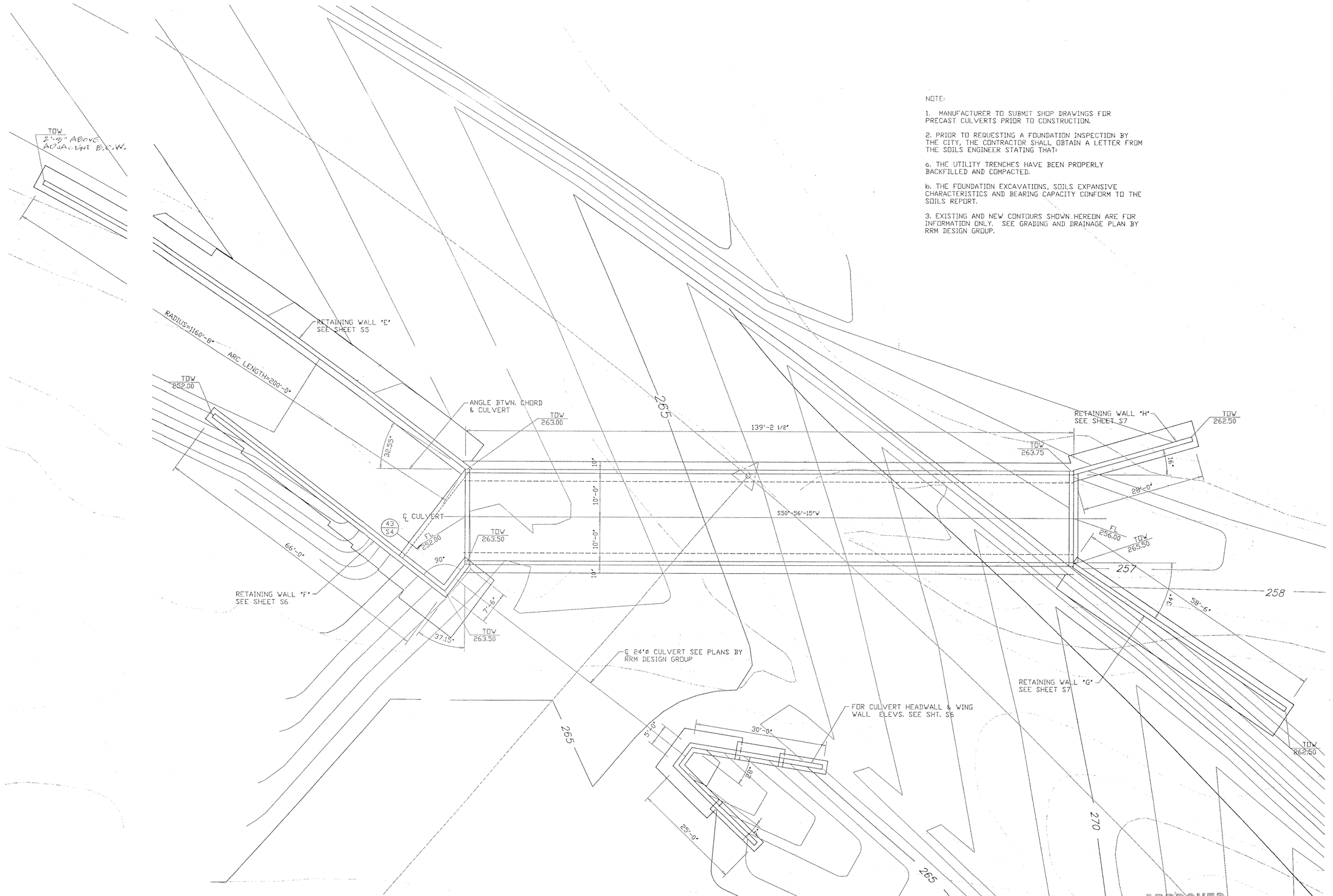

NOTE:

1. MANUFACTURER TO SUBMIT SHOP DRAWINGS FOR PRECAST CULVERTS PRIOR TO CONSTRUCTION.

2. PRIOR TO REQUESTING A FOUNDATION INSPECTION BY THE CITY, THE CONTRACTOR SHALL OBTAIN A LETTER FROM THE SOILS ENGINEER STATING THAT:

a. THE UTILITY TRENCHES HAVE BEEN PROPERLY BACKFILLED AND COMPACTED.

b. THE FOUNDATION EXCAVATIONS, SOILS EXPANSIVE CHARACTERISTICS AND BEARING CAPACITY CONFORM TO THE SOILS REPORT.

3. EXISTING AND NEW CONTOURS SHOWN HEREON ARE FOR INFORMATION ONLY. SEE GRADING AND DRAINAGE PLAN BY RRM DESIGN GROUP.

ARCH CULVERT PLAN-ORCUTT ROAD

1"=10'-0"

APPROVED
SEP 15 1998
ENGINEERING DIVISION
CITY OF SAN LUIS OBISPO

REGISTERED PROFESSIONAL ENGINEER
KEVIN T. DEVANEY
NO. 38053
Exp. 3-31-01
CIVIL
STATE OF CALIFORNIA

REVISIONS

NO.	DATE:

CONCRETE ARCH CULVERTS

TRACT 1750 SAN LUIS OBISPO, CA
for R.W. HERTEL & SONS

CULVERT PLAN
ORCUTT ROAD

THESE DRAWINGS AND THE DESIGN REPRESENTED THEREBY ARE THE PROPERTY OF THE DEVANEY COMPANY AND NO PART SHALL BE COPIED OR USED IN CONNECTION WITH ANY OTHER PROJECT WITHOUT THE WRITTEN CONSENT OF THE DEVANEY COMPANY

THE DEVANEY COMPANY
CONSULTING ENGINEERS
1390 SAWLEAF COURT SAN LUIS OBISPO, CA 93401
(805) 434-2219

DATE: 13 JUL 98
DRAWN BY: GDW
CHECKED BY: K.T.D.
PROJECT NO.: 9806

SHEET NO.
S-3
OF 9

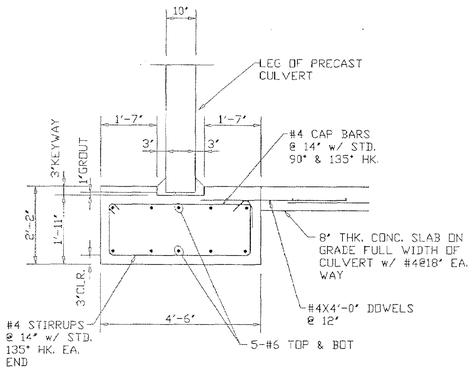

41 SECT. @ CULVERT FTG.
SCALE: 1/2" = 1'-0"

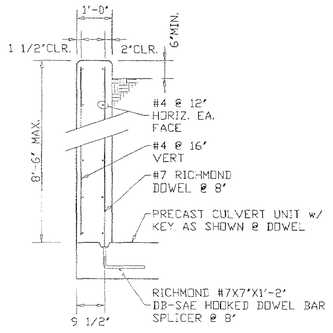

42 HEADWALL DETAIL
SCALE: 1/2" = 1'-0"

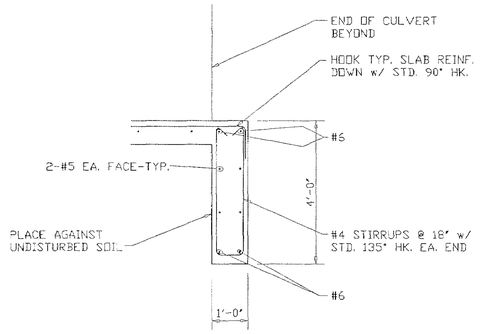

43 SECT. @ CUT-OFF WALL
SCALE: 1/2" = 1'-0"

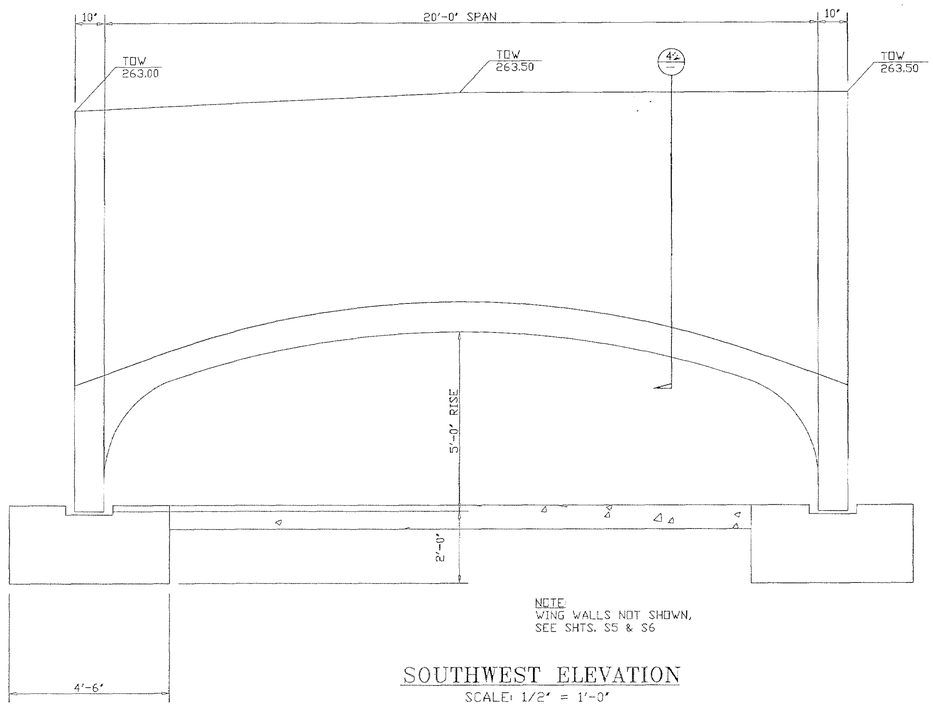

NOTE:
WING WALLS NOT SHOWN, SEE SHTS. S5 & S6

SOUTHWEST ELEVATION
SCALE: 1/2" = 1'-0"

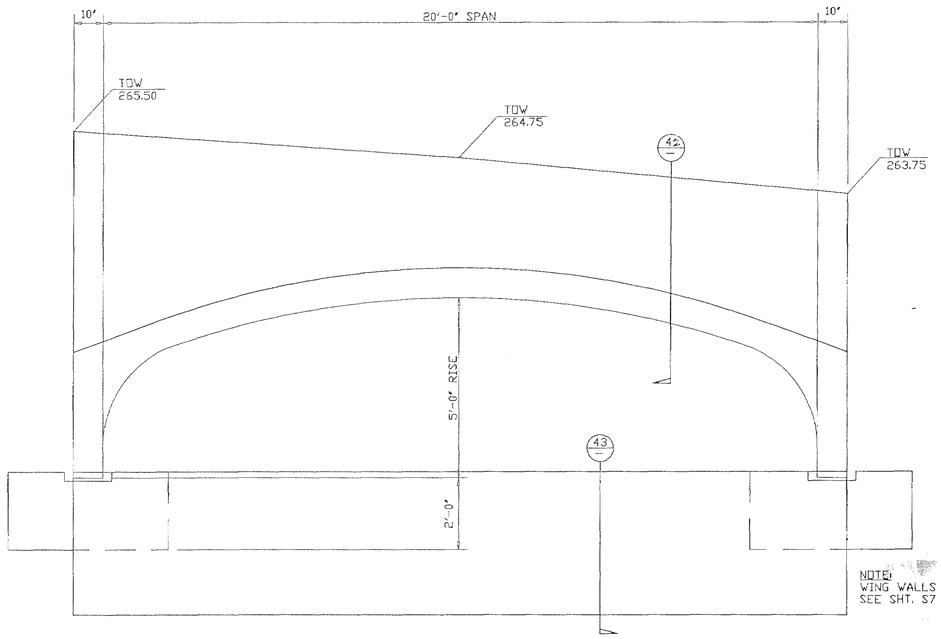

NOTE:
WING WALLS NOT SHOWN, SEE SHT. S7

NORTHEAST ELEVATION
SCALE: 1/2" = 1'-0"

APPROVED
SEP 15 1998
ENGINEERING DIVISION
CITY OF SAN LUIS OBISPO

REGISTERED PROFESSIONAL ENGINEER
KEVIN T. DEVANEY
No. 38053
Exp. 3-31-01
CIVIL
STATE OF CALIFORNIA

REVISIONS

NO.	DATE:

CONCRETE ARCH CULVERTS

TRACT 1750 SAN LUIS OBISPO, CA
for R.W. HERTEL & SONS

CULVERT ELEVATIONS & DETAILS
ORCUTT ROAD

THESE DRAWINGS AND THE DESIGN REPRESENTED THEREBY ARE THE PROPERTY OF THE DEVANEY COMPANY AND AS PART SHALL BE USED OR REPRODUCED IN CONNECTION WITH ANY OTHER PROJECT WITHOUT THE WRITTEN CONSENT OF THE DEVANEY COMPANY

THE DEVANEY COMPANY
CONSULTING ENGINEERS
1390 SAWLEAF COURT SAN LUIS OBISPO, CA 93401
(805) 434-2219

DATE: 13 JUL 98
DRAWN BY: GDW
CHECKED BY: K.T.D.
PROJECT NO.: 9806

SHEET NO.
S-4
OF 9

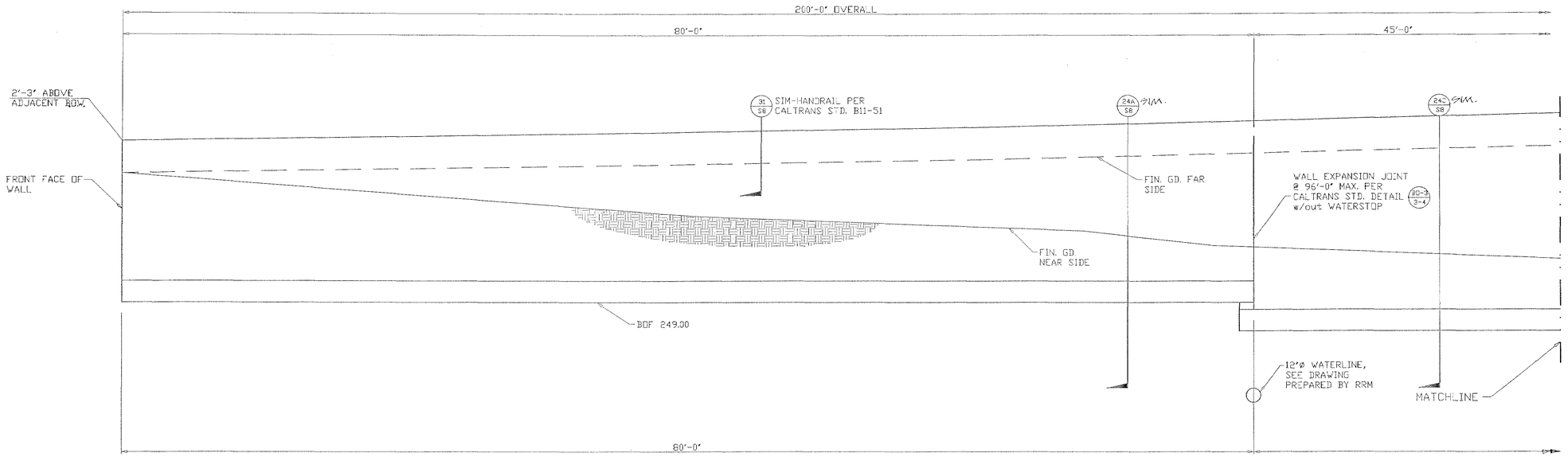

RETAINING WALL "E" ELEVATION–VIEWED FROM CREEK CHANNEL

Scale: 1"=4'

NOTE:
WALL 'E' SHALL BE 12" THICK @ THE TOP FULL LENGTH

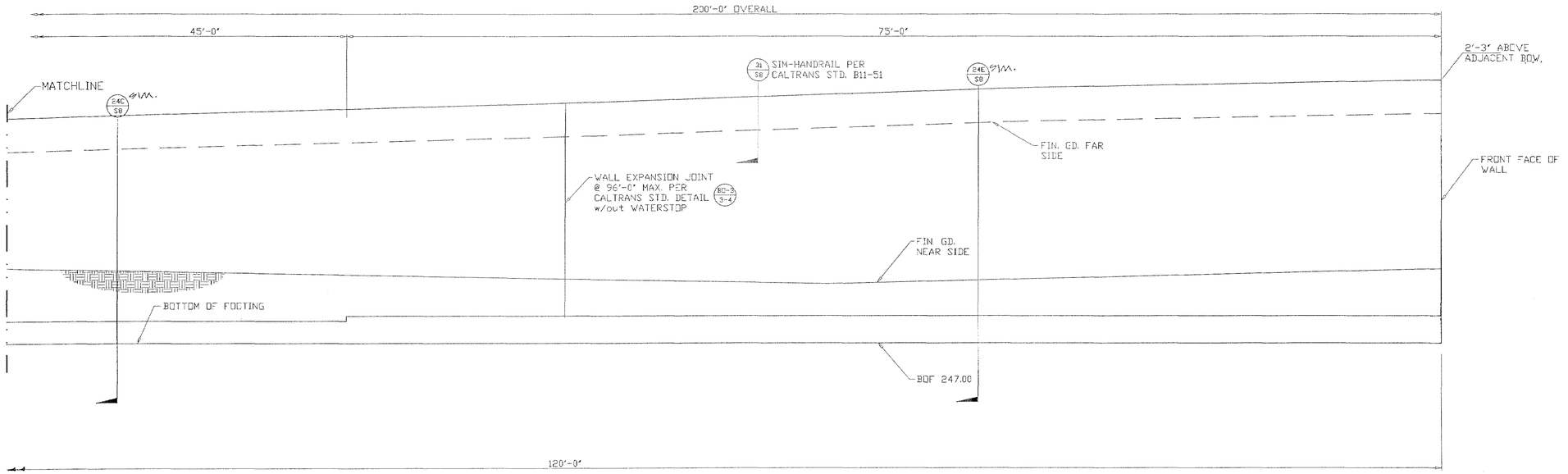

RETAINING WALL "E" ELEVATION–VIEWED FROM CREEK CHANNEL

Scale: 1"=4'

APPROVED
SEP 15 1998
ENGINEERING DIVISION
CITY OF SAN LUIS OBISPO

REGISTERED PROFESSIONAL ENGINEER
KEVIN T. DEVANEY
NO. 38053
Exp. 3-31-01
CIVIL
STATE OF CALIFORNIA

REVISIONS

NO.	DATE:

CONCRETE ARCH CULVERTS

TRACT 1750 SAN LUIS OBISPO, CA
for R.W. HERTEL & SONS

RETAINING WALL ELEVATIONS
ORCUTT ROAD

THESE DRAWINGS AND THE DESIGN REPRESENTED THEREBY ARE THE PROPERTY OF THE DEVANEY COMPANY AND NO PART SHALL BE COPIED OR USED IN CONNECTION WITH ANY OTHER PROJECT WITHOUT THE WRITTEN CONSENT OF THE DEVANEY COMPANY.

THE DEVANEY COMPANY
CONSULTING ENGINEERS
1390 SAWLEAF COURT SAN LUIS OBISPO, CA 93401
(805) 434-2219

DATE: 13 JUL 98
DRAWN BY: GDW
CHECKED BY: K.T.D.
PROJECT NO.: 9806

SHEET NO.
S-5
OF 19

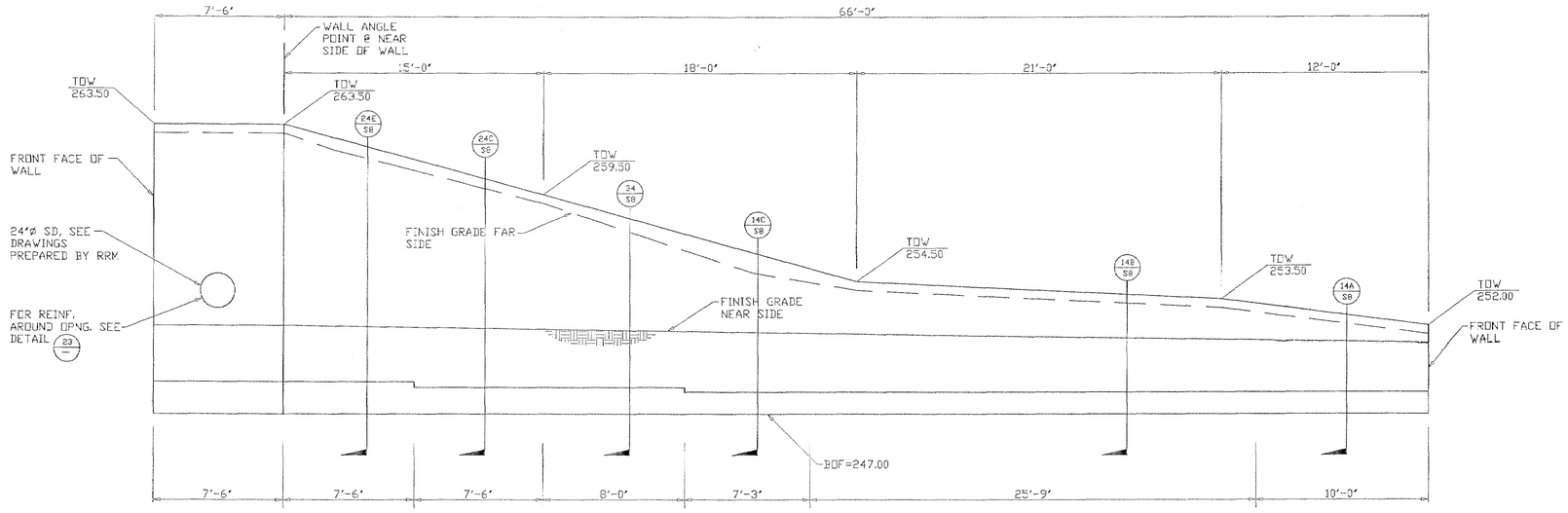

RETAINING WALL "F" ELEVATION–VIEWED FROM THE CREEK CHANNEL

Scale: 1"=4'

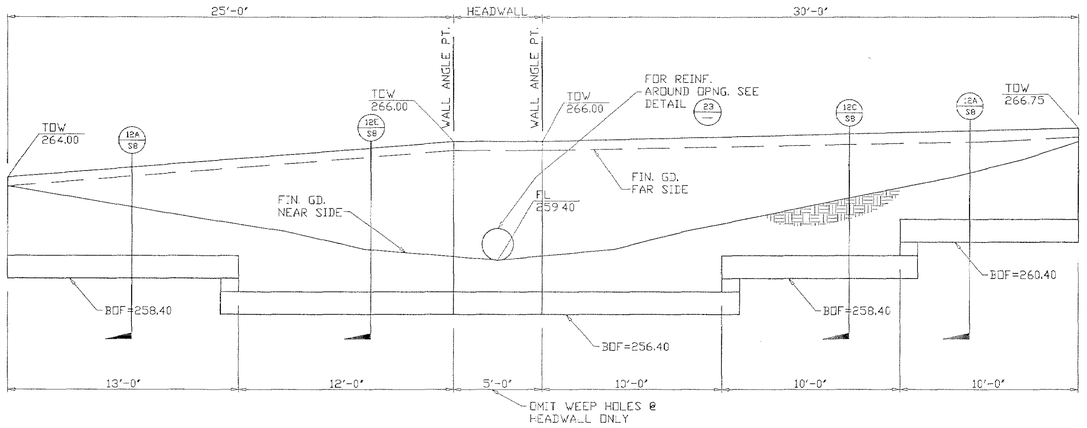

PIPE WALL ELEVATION–VIEWED FROM THE CREEK CHANNEL

Scale: 1"=4'

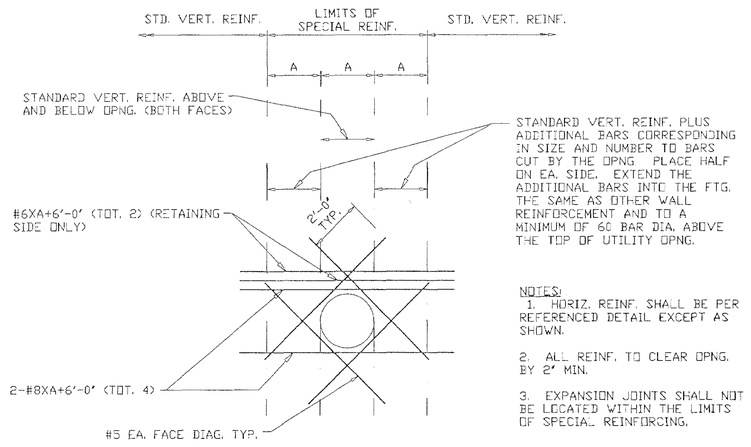

23 ELEVATION @ RET. WALL UTIL. OPNG.

SCALE: 3/8" = 1'-0"

APPROVED
SEP 15 1993
ENGINEERING DIVISION
CITY OF SAN LUIS OBISPO

REGISTERED PROFESSIONAL ENGINEER
KEVIN T. DEVANEY
No. 38053
Exp. 3-31-01
CIVIL
STATE OF CALIFORNIA

REVISIONS

NO.	DATE:

CONCRETE ARCH CULVERTS

TRACT 1750 SAN LUIS OBISPO, CA
for R.W. HERTEL & SONS

RETAINING WALL ELEVATIONS
ORCUTT ROAD

THESE DRAWINGS AND THE DESIGN REPRESENTED THEREBY ARE THE PROPERTY OF THE DEVANEY COMPANY AND NO PART SHALL BE COPIED OR USED IN CONNECTION WITH ANY OTHER PROJECT WITHOUT THE WRITTEN CONSENT OF THE DEVANEY COMPANY

THE DEVANEY COMPANY
CONSULTING ENGINEERS
1390 SAWLEAF COURT SAN LUIS OBISPO, CA 93401
(805) 434-2219

DATE: 13 JUL 98
DRAWN BY: GDW
CHECKED BY: K.T.D.
PROJECT NO.: 9806

SHEET NO.
S-6
OF 9

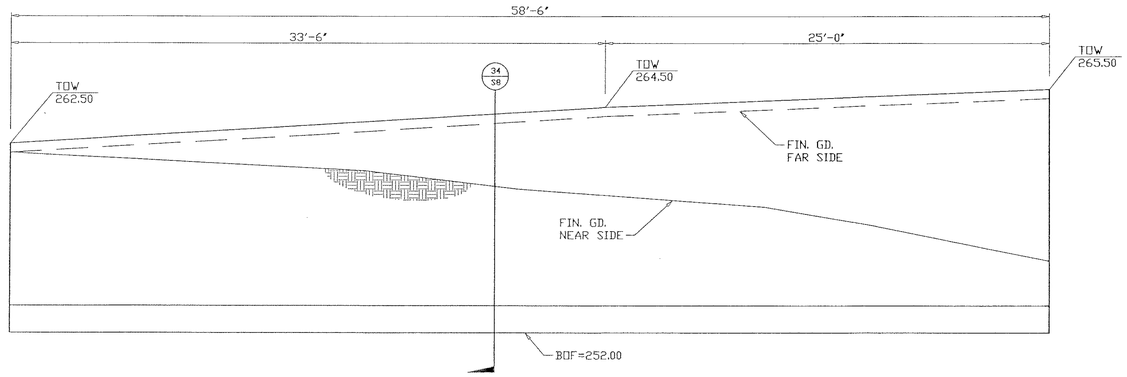

RETAINING WALL "G" ELEVATION–VIEWED FROM THE CREEK CHANNEL

Scale: 1"=4'

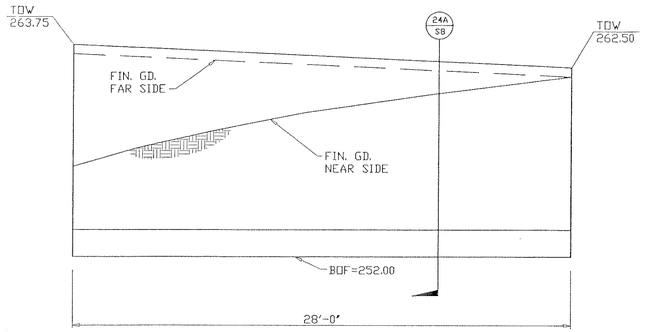

RETAINING WALL "H" ELEVATION–
VIEWED FROM THE CREEK CHANNEL

Scale: 1"=4'

APPROVED
SEP 15 1993
ENGINEERING DIVISION
CITY OF SAN LUIS OBISPO

REGISTERED PROFESSIONAL ENGINEER
KEVIN T. DEVANEY
NO. 38053
Exp. 3-31-01
CIVIL
STATE OF CALIFORNIA

REVISIONS

NO.	DATE:

CONCRETE ARCH CULVERTS

TRACT 1750 SAN LUIS OBISPO, CA
for R.W. HERTEL & SONS

RETAINING WALL ELEVATIONS
ORCUTT ROAD

THESE DRAWINGS AND THE CONCEPTS INCORPORATED THEREIN ARE THE PROPERTY OF THE DEVANEY COMPANY AND NO PART SHALL BE COPIED, DISCLOSED TO OTHERS OR USED IN CONNECTION WITH ANY WORK OR PROJECT OTHER THAN THE SPECIFIC PROJECT FOR WHICH THEY HAVE BEEN PREPARED, WITHOUT THE PRIOR WRITTEN CONSENT OF THE DEVANEY COMPANY.

THE DEVANEY COMPANY
CONSULTING ENGINEERS
1390 SAWLEAF COURT SAN LUIS OBISPO, CA 93401
(805) 434-2219

DATE: 13 JUL 98
DRAWN BY: GDW
CHECKED BY: K.T.D.
PROJECT NO.: 9806

SHEET NO.
S-7
OF 9

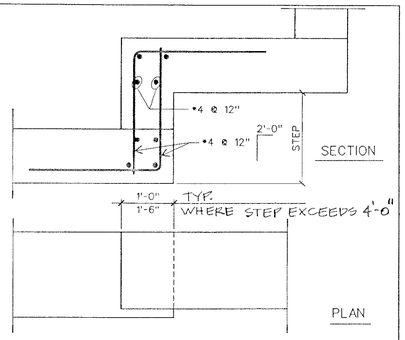

41 FOOTING STEP — ¾"-1'-0"

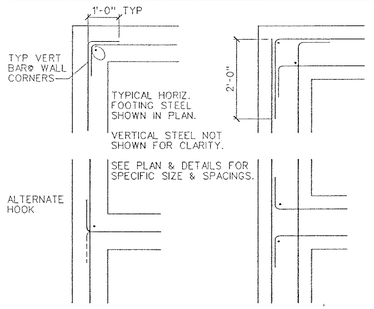

42 TYPICAL CONCRETE CORNER REINFORCING — ¾"-1'-0" — 1.01.14 FOUNDATION

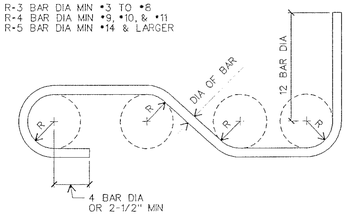

43 TYPICAL PRINCIPAL REINFORCING — NO SCALE — 1.01.15 FOUNDATION

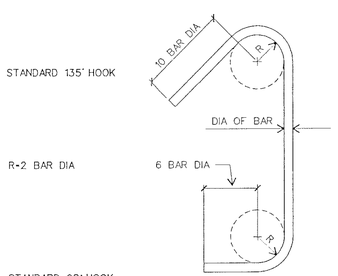

44 TYPICAL STIRRUP & HOOP REINFORCING — NO SCALE — 1.01.16 FOUNDATION

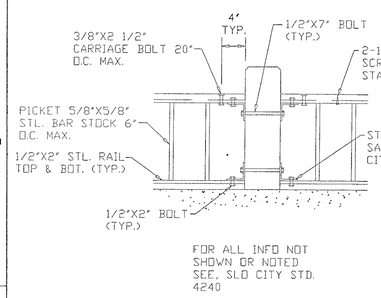

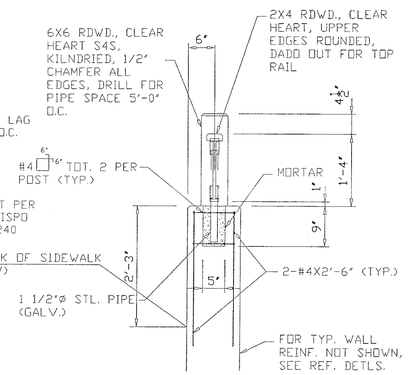

31 MISSION STYLE HANDRAIL

RETAINING WALL SCHEDULE

TYPE	DIMENSIONS			REINFORCING			
	"H"	"W"	"K"	"X"	"P"	"Z"	"Y"
A	5'-0"	3'-0"	0	*4@16"	2'-0"	*4@16"	*4@48"
B	6'-0"	3'-9"	0	*4@16"	2'-0"	*4@16"	*4@24"
C	7'-0"	4'-9"	0	*4@15"	2'-0"	*4@15"	*4@12"
D	8'-0"	4'-3"	1'-0"	*4@8"	3'-6"	*4@16"	*4@12"
E	9'-0"	5'-0"	1'-3"	*5@8"	4'-3"	*4@16"	*5@12"

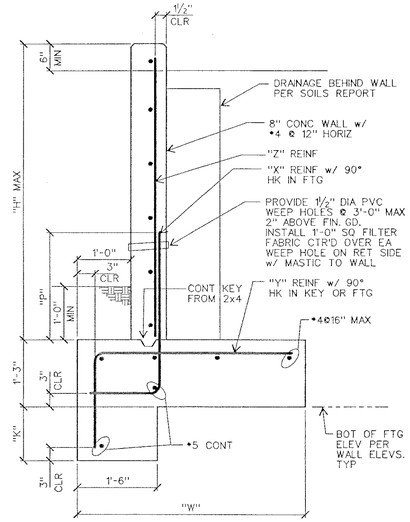

12 RETAINING WALL — 80612S1 — ¾"-1'-0"

RETAINING WALL SCHEDULE

TYPE	DIMENSIONS						REINFORCING	
	"H"	"W"	"T"	"K"	"A"	"B"	"X"	"Y"
A	11'-0"	6'-0"	1'-6"	2'-0"	1'-0"	4'-0"	*5@8"	*5@8"
B	12'-0"	6'-6"	1'-6"	2'-3"	1'-0"	5'-0"	*6@9"	*6@9"
C	13'-0"	7'-0"	1'-6"	2'-9"	1'-0"	6'-0"	*6@6"	*6@8"
D	14'-0"	7'-6"	1'-6"	3'-0"	1'-0"	7'-0"	*7@7"	*6@7"
E	15'-0"	8'-0"	1'-10"	3'-0"	1'-4"	8'-0"	*6@6"	*6@6"
F	16'-0"	9'-6"	1'-10"	3'-0"	1'-4"	9'-0"	*7@6"	*7@5"
G	17'-0"	10'-0"	1'-10"	3'-6"	1'-6"	10'-0"	*7@6"	*8@6"

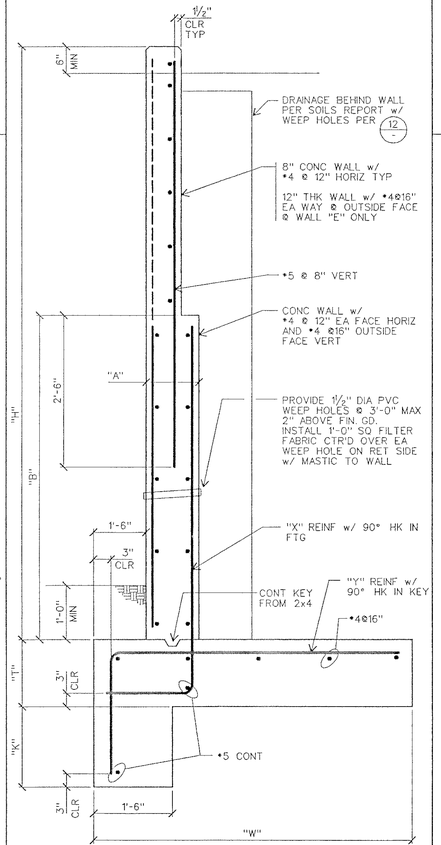

24 RETAINING WALL — 80624S1 — ¾"-1'-0"

RETAINING WALL SCHEDULE

TYPE	DIMENSIONS			REINFORCING			
	"H"	"W"	"K"	"X"	"P"	"Z"	"Y"
A	5'-0"	3'-0"	0	*4@16"	2'-0"	*4@16"	*4@32"
B	7'-0"	3'-6"	1'-3"	*5@15"	3'-0"	*4@15"	*5@16"
C	9'-0"	5'-6"	2'-3"	*5@6"	4'-0"	*5@12"	*5@6"

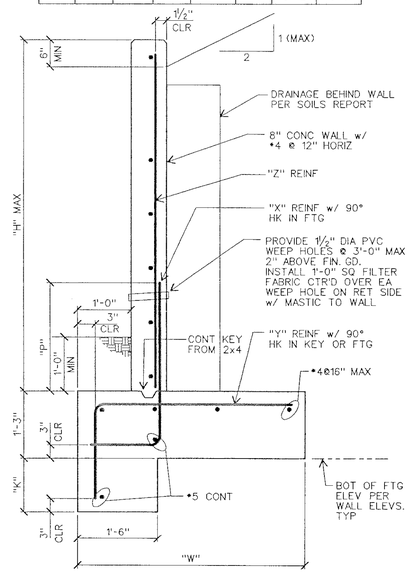

14 RETAINING WALL — 80614S1 — ¾"-1'-0"

APPROVED
DATE: 4-1998
Engineering Div. - SLO
CITY OF SAN LUIS OBISPO

REGISTERED PROFESSIONAL ENGINEER — KEVIN T. DEVANEY — NO. 38053 — Exp. 3-31-01 — CIVIL — STATE OF CALIFORNIA

REVISIONS

NO.	DATE:

CONCRETE ARCH CULVERTS

TRACT 1750 SAN LUIS OBISPO, CA
for R.W. HERTEL & SONS

RETAINING WALL DETAILS

THESE DRAWINGS AND THE DESIGN REPRESENTED THEREBY ARE THE PROPERTY OF THE DEVANEY COMPANY AND ARE NOT TO BE USED IN WHOLE OR IN PART FOR ANY OTHER PROJECT WITHOUT THE WRITTEN CONSENT OF THE DEVANEY COMPANY. THEY ARE NOT TO BE LOANED, COPIED OR REPRODUCED IN ANY MANNER WHATSOEVER NOR ARE THEY TO BE ASSIGNED TO ANY THIRD PARTY WITHOUT FIRST OBTAINING THE WRITTEN AGREEMENT OF THE DEVANEY COMPANY TO SUCH ASSIGNMENT, BE FURNISHED UPON REQUEST IN CONNECTION WITH ANY OTHER PROJECT.

THE DEVANEY COMPANY
CONSULTING ENGINEERS
1390 SAWLEAF COURT SAN LUIS OBISPO, CA 93401
(805) 434-2219

DATE: 15 JUL 98
DRAWN BY: GDW
CHECKED BY: K.T.D.
PROJECT NO.: 9806

SHEET NO.
S-8
OF 19

GENERAL STRUCTURAL NOTES

GENERAL NOTES

1. THE FOLLOWING NOTES, TYPICAL DETAILS AND SCHEDULES SHALL APPLY TO ALL PHASES OF THIS PROJECT UNLESS OTHERWISE SHOWN OR NOTED.
2. SPECIFIC NOTES AND DETAILS SHALL TAKE PRECEDENCE OVER GENERAL NOTES AND TYPICAL DETAILS.
3. ALL MATERIALS AND WORKMANSHIP SHALL CONFORM TO THE MINIMUM STANDARDS OF THE 1994 EDITION OF THE UNIFORM BUILDING CODE (U.B.C.) AND SUCH OTHER REGULATING AGENCIES EXERCISING AUTHORITY OVER ANY PORTION OF THE WORK. THE CONTRACTOR SHALL HAVE A COPY OF THE U.B.C. ON THE JOB SITE.
4. THE CONTRACTOR SHALL EXAMINE THE DRAWINGS AND SPECIFICATIONS (CONTRACT DOCUMENTS), AND SHALL NOTIFY THE ARCHITECT OR ENGINEER OF ANY DISCREPANCIES HE MAY FIND BEFORE PROCEEDING WITH THE WORK.
5. ALL INFORMATION ON EXISTING CONDITIONS SHOWN ON DRAWINGS ARE BASED ON BEST PRESENT KNOWLEDGE AVAILABLE, BUT WITHOUT GUARANTEE OF ACCURACY. THE CONTRACTOR SHALL VERIFY AND BE RESPONSIBLE FOR ALL DIMENSIONS AND CONDITIONS AT THE SITE AND SHALL NOTIFY THE ARCHITECT OR ENGINEER OF ANY DISCREPANCIES BETWEEN ACTUAL SITE CONDITIONS AND INFORMATION SHOWN ON DRAWINGS OR IN THE SPECIFICATIONS (CONTRACT DOCUMENTS) BEFORE PROCEEDING WITH WORK.
6. THE CONTRACTOR SHALL IMMEDIATELY NOTIFY THE ARCHITECT OR ENGINEER OF ANY CONDITION WHICH IN HIS OPINION MIGHT ENDANGER THE STABILITY OF THE STRUCTURE OR CAUSE DISTRESS OF THE STRUCTURE.
7. ALL WORK SHALL CONFORM TO THE BEST PRACTICE PREVAILING IN THE VARIOUS TRADES COMPRISING WORK. THE CONTRACTOR SHALL BE RESPONSIBLE FOR COORDINATING THE WORK OF ALL TRADES.
8. THESE NOTES, DETAILS, DRAWINGS AND SPECIFICATIONS (CONTRACT DOCUMENTS) REPRESENT THE FINISHED STRUCTURE, AND DO NOT INDICATE THE METHOD OF CONSTRUCTION. THE CONTRACTOR SHALL SUPERVISE AND DIRECT THE WORK AND SHALL BE SOLELY RESPONSIBLE FOR CONSTRUCTION MEANS, METHODS, TECHNIQUES, SEQUENCES AND PROCEDURES.
9. THE CONTRACTOR SHALL REFER TO THE SPECIFICATIONS FOR INFORMATION NOT COVERED BY THESE DRAWINGS AND GENERAL NOTES.
10. THE CONTRACTOR SHALL PROVIDE TEMPORARY BRACING AND SHORING FOR ALL STRUCTURAL MEMBERS AS REQUIRED FOR STRUCTURAL STABILITY OF THE STRUCTURE DURING ALL PHASES OF CONSTRUCTION.
11. THE CONTRACTOR SHALL TAKE ALL STEPS NECESSARY TO ENSURE PROPER ALIGNMENT OF THE STRUCTURE AFTER THE INSTALLATION OF ALL STRUCTURAL AND FINISH MATERIALS. THIS SHALL INCLUDE ANY NECESSARY PRELOADING OF THE STRUCTURE TO DETERMINE FINAL POSITION OF THE COMPLETED WORK.
12. OBSERVATION VISITS TO THE PROJECT SITE BY FIELD REPRESENTATIVES OF ARCHITECT AND/OR ENGINEER (SUPPORT SERVICES) SHALL NOT INCLUDE INSPECTIONS OF SAFETY OR PROTECTIVE MEASURES, NOR CONSTRUCTION PROCEDURES, TECHNIQUES OR METHODS. ANY SUPPORT SERVICES PERFORMED BY ARCHITECT OR ENGINEER DURING ANY PHASE OF CONSTRUCTION, SHALL BE DISTINGUISHED FROM CONTINUOUS AND DETAILED INSPECTION SERVICES (AS REQUIRED BY ANY REGULATING GOVERNMENTAL AGENCY, I.E. LOCAL BUILDING DEPARTMENT) PROVIDED BY OTHERS. THESE SUPPORT SERVICES, WHETHER OF MATERIAL OR WORK, ARE PERFORMED SOLELY FOR THE PURPOSE OF ASSISTING IN QUALITY CONTROL AND IN ACHIEVING CONFORMANCE WITH CONTRACT DOCUMENTS, BUT DO NOT GUARANTEE CONTRACTOR'S PERFORMANCE AND SHALL NOT BE CONSTRUED AS SUPERVISION OF CONSTRUCTION.
13. PROVIDE OPENINGS AND SUPPORTS AS REQUIRED PER TYPICAL DETAILS AND NOTES FOR MECHANICAL, AND ELECTRICAL EQUIPMENT, VENTS, DUCTS, PIPING, ETC. ALL MECHANICAL AND ELECTRICAL EQUIPMENT SHALL BE PROPERLY "SWAY BRACED" AGAINST LATERAL FORCES.
14. THESE NOTES, DETAILS, DRAWINGS AND SPECIFICATIONS (CONTRACT DOCUMENTS) DO NOT CARRY NECESSARY PROVISIONS FOR CONSTRUCTION SAFETY. THESE DOCUMENTS AND ALL PHASES OF CONSTRUCTION HEREBY CONTEMPLATED ARE TO BE GOVERNED, AT ALL TIMES, BY APPLICABLE PROVISIONS OF THE CURRENT CALIFORNIA OCCUPATIONAL SAFETY AND HEALTH ACT.
15. WHERE ANY CONFLICT OCCURS BETWEEN THE REQUIREMENTS OF FEDERAL, STATE AND LOCAL LAWS, CODES, ORDINANCES, RULES AND REGULATIONS, THE MOST STRINGENT WILL GOVERN.
16. REFER TO ARCHITECTURAL DRAWINGS TO COORDINATE WITH STRUCTURAL DRAWINGS, AND ANY DISCREPANCY BETWEEN THESE DRAWINGS SHALL BE REFERRED TO THE ARCHITECT OR ENGINEER FOR CLARIFICATION BEFORE START OF CONSTRUCTION.
17. WRITTEN DIMENSIONS SHALL HAVE PRECEDENCE OVER SCALED DIMENSIONS.
18. DRAWINGS (NOTES, SCHEDULES, DETAILS AND PLANS) SHALL HAVE PRECEDENCE OVER STRUCTURAL CALCULATIONS.
19. IN THE EVENT THAT CERTAIN FEATURES OF THE CONSTRUCTION ARE NOT FULLY SHOWN ON THE DRAWINGS OR CALLED FOR IN THE GENERAL NOTES OR SPECIFICATIONS, THEN THEIR CONSTRUCTION SHALL BE OF THE SAME CHARACTER AS FOR SIMILAR CONDITIONS THAT ARE SHOWN OR CALLED FOR.
20. CONTRACTOR SHALL HAVE A COPY OF PROJECT SOILS REPORT ON THE JOB SITE.
21. A.S.T.M. DESIGNATION AND ALL STANDARDS REFER TO THE LATEST AMENDMENTS.
22. MODIFICATIONS OF THESE NOTES, DETAILS, PLANS AND SPECIFICATIONS SHALL NOT BE MODIFIED WITHOUT PRIOR WRITTEN APPROVAL OF THE ARCHITECT OR ENGINEER.
23. ONLY "APPROVED" STRUCTURAL WORKING DRAWINGS (AND OTHER CONSTRUCTION DOCUMENTS) ARE PERMITTED TO BE USED FOR CONSTRUCTION ON THIS PROJECT. ALL OTHER DRAWINGS ARE OBSOLETE AND ARE NOT PERMITTED ON THE JOB SITE, NOR SHALL THEY BE USED FOR ANY CONSTRUCTION PURPOSES. CONTRACTORS USING UNAPPROVED DRAWINGS ARE SOLELY RESPONSIBLE FOR ALL WORK NOT PERFORMED IN ACCORDANCE WITH THE "APPROVED" DRAWINGS.

CONCRETE

1. ALL CONCRETE SHALL HAVE A MINIMUM ULTIMATE COMPRESSIVE STRENGTH OF 3,000 P.S.I. AT 28 DAYS. ALL CONCRETE SHALL BE REGULAR WEIGHT (UNLESS SPECIFICALLY NOTED OTHERWISE).
2. ALL CONCRETE WORK SHALL COMPLY WITH U.B.C. CHAPTER 19.
3. ALL SPECIAL INSPECTION SHALL BE PROVIDED IN ACCORDANCE WITH U.B.C CHAPTER 17, STRUCTURAL TESTS AND INSPECTIONS. WHERE SPECIAL INSPECTION IS REQUIRED, INSPECTION SHALL BE PROVIDED BY I.C.B.O. CERTIFIED INSPECTORS. SPECIAL INSPECTORS SHALL BE APPROVED BY LOCAL BUILDING AGENCY.
4. CEMENT SHALL BE PORTLAND CEMENT TYPE I OR II AND SHALL CONFORM TO U.B.C. STANDARD NO. 19-1 LOW ALKALI.
5. AGGREGATES SHALL CONFORM TO A.S.T.M. C33.
6. WHERE NOT SPECIFICALLY DETAILED, THE MINIMUM CONCRETE COVER ON REINFORCING STEEL SHALL BE:
   A. CONCRETE PLACED AGAINST FORMS, BUT EXPOSED TO EARTH OR WEATHER: 2"
7. REINFORCING BARS LARGER THAN #8 ARE NOT PERMITTED UNLESS SPECIFICALLY DETAILED OR NOTED OTHERWISE.
8. MINIMUM LAP FOR ALL REINFORCING BARS AT SPLICES: (SPLICES TO BE STAGGERED)

   #3, #4, #5 & #6------------24"
   #7------------------------28"
   #8------------------------32"
9. THE MINIMUM RADIUS OF BEND FOR REINFORCING STEEL (MEASURED ON THE INSIDE OF BAR) SHALL BE AS FOLLOWS:

   #3---------------------1 1/8"   #6---------------2 1/4"
   #4---------------------1 1/2"   #7---------------2 5/8"
   #5---------------------1 7/8"   #8---------------3"
10. ALL ANCHOR BOLTS USED IN CONCRETE CONSTRUCTION SHALL HAVE A MINIMUM TOTAL EMBEDMENT AS FOLLOWS, U.O.N.:

    5/8" DIA OR SMALLER-----------7"
    3/4" DIA----------------------8"
    7/8" DIA----------------------9"
    1" DIA------------------------10"
11. LOCATION OF ALL CONSTRUCTION JOINTS, OTHER THAN SPECIFIED, SHALL BE APPROVED BY ARCHITECT/ENGINEER PRIOR TO POURING. CONSTRUCTION JOINTS SHALL BE THOROUGHLY AIR AND WATER CLEANED AND HEAVILY ROUGHENED SO AS TO EXPOSE COARSE AGGREGATES. ALL SURFACES TO RECEIVE CONCRETE SHALL BE MAINTAINED CONTINUOUSLY WET AT LEAST THREE HOURS IN ADVANCE OF POURING.
12. ALL REINFORCING STEEL, ANCHOR BOLTS, DOWELS, INSERTS AND ANY OTHER HARDWARE TO BE SET IN CONCRETE SHALL BE WELL SECURED IN POSITION PRIOR TO POURING OF CONCRETE.
13. ARCHITECT OR ENGINEER AND INSPECTOR SHALL BE NOTIFIED FOR REINFORCING INSPECTION PRIOR TO POURING ANY CONCRETE.
14. CONTRACTOR SHALL OBTAIN APPROVAL FROM ARCHITECT OR ENGINEER PRIOR TO PLACING SLEEVES, PIPES, DUCTS, CHASES, CORING AND OPENINGS ON OR THROUGH STRUCTURAL CONCRETE FLOOR SLABS, UNLESS SPECIFICALLY DETAILED OR NOTED.
15. FORMWORK DESIGN AND REMOVAL SHALL CONFORM TO U.B.C. SECTION 1906.
16. VIBRATE ALL CONCRETE (INCLUDING SLABS ON GRADE) AS IT IS PLACED, WITH A MECHANICAL VIBRATOR OPERATED BY EXPERIENCED PERSONNEL. THE VIBRATOR SHALL BE USED TO CONSOLIDATE THE CONCRETE, NOT TRANSPORT IT. REINFORCING AND FORMS SHALL NOT BE VIBRATED.
17. ALL CONCRETE WORK SHALL BE DONE IN ACCORDANCE WITH THE LATEST EDITION OF THE A.C.I. BUILDING CODE (A.C.I. 318-95) AND THE LATEST EDITIONS OF THE A.C.I. MANUALS OF CONCRETE PRACTICE.
18. CONCRETE SHALL NOT FREE FALL MORE THAN SIX FEET. USE TREMIE, PUMP OR OTHER APPROVED METHODS.
19. CONCRETE SHALL BE MAINTAINED IN A MOIST CONDITION FOR A MINIMUM OF 5 DAYS AFTER PLACEMENT.
20. CONTRACTOR SHALL SUBMIT REQUESTS FOR USE OF ADMIXTURES TO ARCHITECT OR ENGINEER FOR HIS REVIEW.
21. MIX DESIGNS SHALL BE PREPARED BY AN APPROVED TESTING LABORATORY AND SHALL BE SUBMITTED TO THE ARCHITECT OR ENGINEER FOR REVIEW.
22. ONLY ONE GRADE OF CONCRETE SHALL BE ALLOWED ON PROJECT SITE AT ANY ONE TIME.
23. CONCRETE STRENGTH (FOR CONCRETE DESIGN STRENGTHS EXCEEDING 2,500 P.S.I.) SHALL BE VERIFIED BY STANDARD CYLINDER TESTS (IN ACCORDANCE WITH U.B.C. SECTION 1905) MADE BY AN APPROVED TESTING LABORATORY. CONTRACTOR SHALL MAINTAIN COPIES OF TEST REPORTS AT JOB SITE AND AVAILABLE FOR REVIEW AND INSPECTION BY BUILDING OFFICIALS. MAKE 3 TEST CYLINDERS FOR EACH DAY'S POUR. TEST EACH BATCH OF CYLINDERS AS FOLLOWS: 1 AT 7 DAYS, AND 2 AT 28 DAYS.

REINFORCING STEEL

1. ALL REINFORCING STEEL SHALL BE DEFORMED INTERMEDIATE GRADE BARS CONFORMING TO A.S.T.M. A-615, GRADE 60.
2. REINFORCING STEEL SHALL NOT BE WELDED, UNLESS SPECIFICALLY NOTED OTHERWISE.
3. WELDING OF REINFORCING STEEL (WHERE SPECIFICALLY NOTED OR DETAILED) SHALL CONFORM TO U.B.C. STANDARD NO. 19-28.
4. TO HOLD REINFORCING BARS IN THEIR TRUE POSITION AND PREVENT DISPLACEMENT, STANDARD TIE AND ANCHORAGE DEVICES MUST BE PROVIDED. PLACING OF REINFORCEMENT SHALL CONFORM TO U.B.C. SECTION 1907.5.
5. SHOP DRAWINGS FOR FABRICATION OF ANY REINFORCING STEEL SHALL BE APPROVED BY CONTRACTOR AND SUBMITTED TO ARCHITECT OR ENGINEER, FOR HIS REVIEW, PRIOR TO FABRICATION.
6. REFER TO CONCRETE NOTES FOR MINIMUM SPLICE LENGTH AND MINIMUM RADIUS OF BEND, OF REINFORCING STEEL.
7. STAGGER SPLICES IN REINFORCING STEEL, UNLESS SPECIFICALLY NOTED OTHERWISE.
8. ALL REINFORCING BAR BENDS SHALL BE MADE COLD.
9. FABRICATION, ERECTION AND PLACEMENT OF REINFORCING STEEL SHALL CONFORM TO CONCRETE REINFORCING STEEL INSTITUTE OF STANDARD PRACTICE.
10. REINFORCING STEEL SHALL BE CLEAN OF RUST, GREASE OR OTHER MATERIAL LIKELY TO IMPAIR BOND.

STRUCTURAL STEEL AND WELDING

1. ALL STRUCTURAL STEEL SHALL CONFORM TO A.S.T.M. A588 AND U.B.C. STANDARD NO. 22-1.
2. SPECIAL INSPECTION SHALL BE PROVIDED FOR ALL STRUCTURAL WELDING, IN ACCORDANCE WITH U.B.C. CHAPTER 17.
3. ALL STRUCTURAL STEEL SHALL BE FABRICATED AND ERECTED IN ACCORDANCE WITH A.I.S.C. SPECIFICATIONS AND CODE OF STANDARD PRACTICE AS AMENDED TO DATE.
4. ALL WELDING SHALL BE DONE BY QUALIFIED AND CERTIFIED WELDERS.
5. NO FIELD WELDING PERMITTED, UNLESS SPECIFICALLY NOTED OTHERWISE.
6. SHOP DRAWINGS FOR THE FABRICATION OF ANY STRUCTURAL STEEL SHALL BE APPROVED BY CONTRACTOR AND SUBMITTED TO ARCHITECT OR ENGINEER FOR HIS REVIEW, PRIOR TO FABRICATION.
7. NO HOLES OTHER THAN THOSE SPECIFICALLY DETAILED SHALL BE ALLOWED THROUGH STRUCTURAL STEEL MEMBERS. BURNING OF HOLES IS NOT PERMITTED.
8. STEEL PIPE COLUMNS SHALL BE WELDED SEAMLESS PIPE CONFORMING TO A.S.T.M., A-53, GRADE B.
9. OMITTED
10. ALL BOLTS SHALL CONFORM TO A.S.T.M., A-307-68. (U.O.N.)
11. ALL WELDING SHALL CONFORM TO 'AWS' SPECIFICATION FOR WELDING. (E-70XX ELECTRODES).
12. ALL HEADED STUDS (FOR CONCRETE ANCHORAGE) SHALL BE MANUFACTURED BY 'NELSON' OR APPROVED EQUAL.
13. STRUCTURAL TUBE COLUMNS SHALL BE A.S.T.M. A500 GRADE B.
14. WHERE FILLET WELD SIZE IS NOT INDICATED, USE 'AWS' MINIMUM SIZE BASED ON THE THICKNESS OF THE THICKER PART BEING WELDED, AS SPECIFIED IN A.I.S.C. MANUAL OF STEEL CONSTRUCTION, EIGHTH EDITION SECTION 1.17.2.
15. ALL BUTT WELDS TO BE FULL PENETRATION, UNLESS SPECIFICALLY NOTED OTHERWISE.
16. WELDER QUALIFICATION REQUIREMENTS, WELDING PROCEDURE AND WELDING ELECTRODES FOR ALL STRUCTURAL STEEL (EXCEPT STRUCTURAL SHEET STEEL, SEE STEEL DECKING) SHALL CONFORM TO U.B.C. STANDARD NO. 22-1.
17. FABRICATION, ERECTION AND WELDING OF STRUCTURAL STEEL SHALL CONFORM TO U.B.C. STANDARD NO. 22-1.

STEEL DECKING

1. STEEL DECKING SHALL BE COLD ROLLED STEEL CONFORMING TO A.S.T.M. A-611-70, GRADE D STRUCTURAL QUALITY STEEL SHEET, AND HAVE A MINIMUM YIELD STRENGTH (Fy) OF 40 KSI.
2. STEEL DECKING MANUFACTURER SHALL SUBMIT TO ARCHITECT/ENGINEER SHOP DRAWINGS FOR HIS REVIEW PRIOR TO FABRICATION.
3. ALL DECKING SIDE LAPS SHALL BE COMPATIBLE.
4. STEEL DECKING SHALL HAVE A GALVANIZED FINISH.
5. STEEL FLOOR DECK SHALL BE 18 GAUGE VERCO TYPE B, OR APPROVED EQUAL.
6. STEEL DECKING SHEETS SHALL BE CONTINUOUS OVER A MINIMUM OF 3 SUPPORTS (2 SPANS).
7. STEEL DECK SHALL BE PLACED ON THE SUPPORTING FRAMEWORK WITH A MINIMUM END LAP OF 2 INCHES, CENTERED OVER THE SUPPORTS.
8. THE DECK SHALL BE WELDED TO THE SUPPORTS AND SIDE LAP OF ADJACENT UNITS WELDED OR BUTTON PUNCH AS SHOWN ON THESE STRUCTURAL DRAWINGS.

   - 3 WELDS PER SHEET AT ALL SUPPORTS
   - 1-1/2" SIDE LAP WELDS AT MIDSPANS OR BUTTON PUNCH
9. WELDING OF STEEL DECK SHALL BE IN ACCORDANCE WITH LATEST AWS SPECIFICATIONS FOR WELDING SHEET STEEL IN STRUCTURES AND AS SHOWN ON THESE STRUCTURAL DRAWINGS.
10. STEEL DECK SHALL BE ERECTED AND FASTENED IN ACCORDANCE WITH THE MANUFACTURER'S SPECIFICATIONS AND ERECTION LAYOUT, AS WELL AS REQUIREMENTS SET FORTH IN THESE STRUCTURAL DRAWINGS.
11. NO HOLES SHALL BE CUT INTO STEEL DECKING UNLESS SPECIFICALLY NOTED OR DETAILED OTHERWISE.
12. WELD METAL SHALL PENETRATE ALL LAYERS OF DECK MATERIAL AT EACH END AND SIDE JOINTS AND HAVE GOOD FUSION TO THE SUPPORTING MEMBERS.
13. ELECTRODES E60 OR E70 WITH A MINIMUM SIZE OF 1/8".
14. FOR WELDING OF STRUCTURAL SHEET STEEL, WELDER QUALIFICATION REQUIREMENTS, WELDING PROCEDURES AND WELDING ELECTRODES SHALL CONFORM TO U.B.C. STANDARD NO. 27-13.
15. CONTINUOUS INSPECTION IS REQUIRED FOR STEEL DECKING WELDING.

ABBREVIATIONS

@	AT	HDR.	HEADER
A.B	ANCHOR BOLT	HD.	HOLDOWN
ABV.	ABOVE	HOR.	HORIZONTAL
A.C.I	AMERICAN CONCRETE INSTITUTE	H.S.B.	HIGH STRENGTH BOLT
A.I.T.C	AMERICAN INSTITUTE OF TIMBER CONSTRUCTION	HT.	HEIGHT
ALUM.	ALUMINUM	I.C.B.O	INTERNATIONAL CONFERENCE OF BUILDING OFFICIALS
A.S.T.M.	AMERICAN SOCIETY OF TESTING AND MATERIALS	IN.	INCH,INCHES
		INT.	INTERIOR
BLDG.	BUILDING	JST.,JSTS.	JOIST,JOISTS
BLK.	BLOCK	LTWT.	LIGHTWEIGHT
BLKD.	BLOCKED	MAX.	MAXIMUM
BLKG.	BLOCKING	M.B.	MACHINE BOLT
BM.,BMS.	BEAM, BEAMS	MECH.	MECHANICAL
B.O.	BOTTOM OF	MFR.	MANUFACTURED
BOT.	BOTTOM	MIN.	MINIMUM
BRG.	BEARING	M.L.B	MINI-LAMINATED BEAM
B/T	BETWEEN	MTD.	MOUNTED
C.A.C	CALIFORNIA ADMINISTRATIVE CODE	MTL.	METAL
CANT.	CANTILEVER	N.T.S.	NOT TO SCALE
	CENTERLINE	O.A.	OVERALL
CLG.	CEILING	O.C.	ON CENTER
CLR.	CLEAR	PL	PLATE
COL.	COLUMN	PLYWD.	PLYWOOD
CONC.	CONCRETE	P.S.I	POUNDS PER SQUARE INCH
CONC.BLK.	CONCRETE BLOCK	P.W.	PUDDLE WELD
CONN.	CONNECTION	RDWD.	REDWOOD
CONST.	CONSTRUCTION	REINF.	REINFORCEMENT
CONT.	CONTINUE,CONTINUOUS	RET.	RETAINING
C.O.S.	CORNER OF STUD	REQ'D	REQUIRED
ø	DIAMETER	S.F.	SQUARE FEET
d	PENNY	SHT.	SHEET
DBL.	DOUBLE	SIM.	SIMILAR
DET.	DETAIL	SQ.	SQUARE
D.F	DOUGLAS FIR	S.S.	SELECT STRUCTURAL
DIAG.	DIAGONAL	STAGG'D	STAGGERED
DWGS.	DRAWINGS	STAND.,STD.	STANDARD
EA.	EACH	STL.	STEEL
ELEC.	ELECTRIC,ELECTRICAL	S.W.	SLOT WELD
ELEV.	ELEVATION	T&G	TONGUE AND GROOVE
EMBED.	EMBEDDED,EMBEDMENT	T.O.	TOP OF
EQUIP.	EQUIPMENT	T.O.C.	TOP OF CONCRETE
E.S.	EXTRA STRONG	T.O.F.	TOP OF FOOTING
E.W.	EACH WAY	T.O.S.	TOP OF SLAB
EXIST.	EXISTING	T.O.W.	TOP OF WALL
EXT.	EXTERIOR	T.S.	TUBE SECTION
FAB.	FABRICATED	TYP.	TYPICAL
FDN.,FOUND.	FOUNDATION	U.B.C.	UNIFORM BUILDING CODE
F.F.	FINISH FLOOR	UNBLKD.	UNBLOCKED
FLR.	FLOOR	U.O.N.	UNLESS OTHERWISE NOTED
F.O.	FACE OF	VERT.	VERTICAL
F.O.C.	FACE OF CONCRETE	W/	WITH
F.O.C.B.	FACE OF CONCRETE BLOCK	WD	WOOD
F.O.S.	FACE OF STUD	WT.	WEIGHT
F.P.	FULL PENETRATION	W.W.M.	WOVEN WIRE MESH
FT.	FOOT, FEET		
FTG.	FOOTING		
G.L.B.	GLU-LAMINATED BEAM		
GYP. BD.	GYPSUM BOARD		

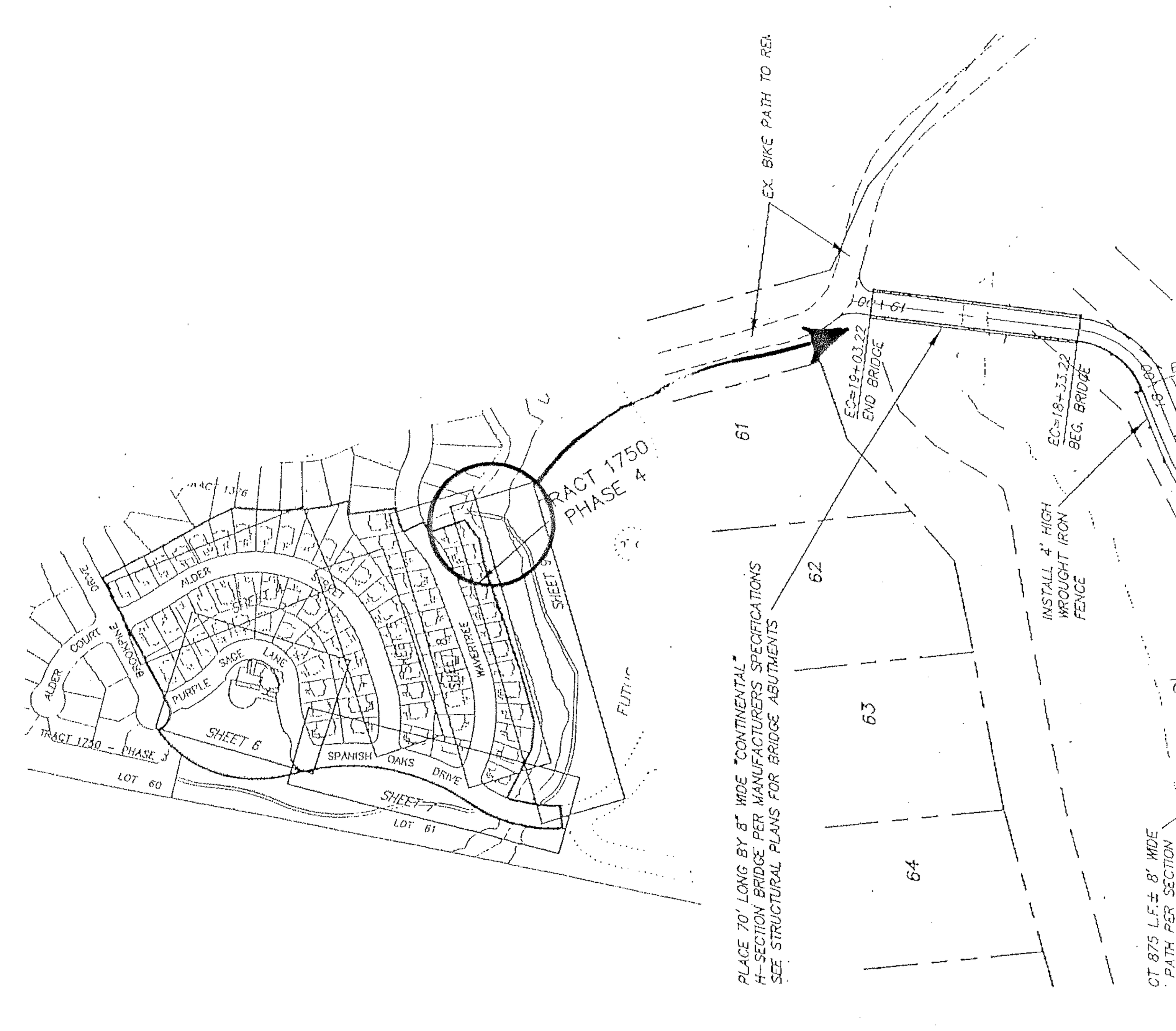

REVISIONS	BY
△1 3/30/99	LS
△2 7/15/99 plan check	LS

THESE DRAWINGS, NOTES AND DETAILS ARE INSTRUMENTS OF SERVICE AND ARE THE PROPERTY OF LAMPMAN & SMITH, A STRUCTURAL ENGINEERING CORPORATION. ALL DRAWINGS, INFORMATION, SPECIFICATIONS, IDEAS, DESIGNS AND ARRANGEMENTS REPRESENTED WITHIN THESE DOCUMENTS SHALL REMAIN THE PROPERTY OF THE ENGINEER. NO PART THEREOF SHALL BE COPIED, DISCLOSED TO OTHERS OR USED IN CONNECTION WITH ANY WORK OR PROJECT OTHER THAN THE SPECIFIC PROJECT FOR WHICH THEY HAVE BEEN PREPARED AND DEVELOPED WITHOUT THE EXPRESSED WRITTEN CONSENT OF THE ENGINEER.
COPYRIGHT 1998.

LAMPMAN & SMITH
STRUCTURAL ENGINEERING CORPORATION
225 PRADO ROAD, SUITE G
SAN LUIS OBISPO, CA 93401
PHONE: (805) 544-9173
FAX: (805)-543-2830

REGISTERED PROFESSIONAL ENGINEER — MICHAEL L. SMITH — 35470 — CIVIL — STATE OF CALIFORNIA

GENERAL STRUCTURAL NOTES

Pedestrian Bridge
For:
Arbor's San Luis Limited Partnership
Prepared for: Central Coast Fabrication

DATE	9/22/98
SCALE	NONE
DRAWN	L&S
JOB	LS98186
SHEET	S-1
OF 4 SHEETS	

SLO
90582

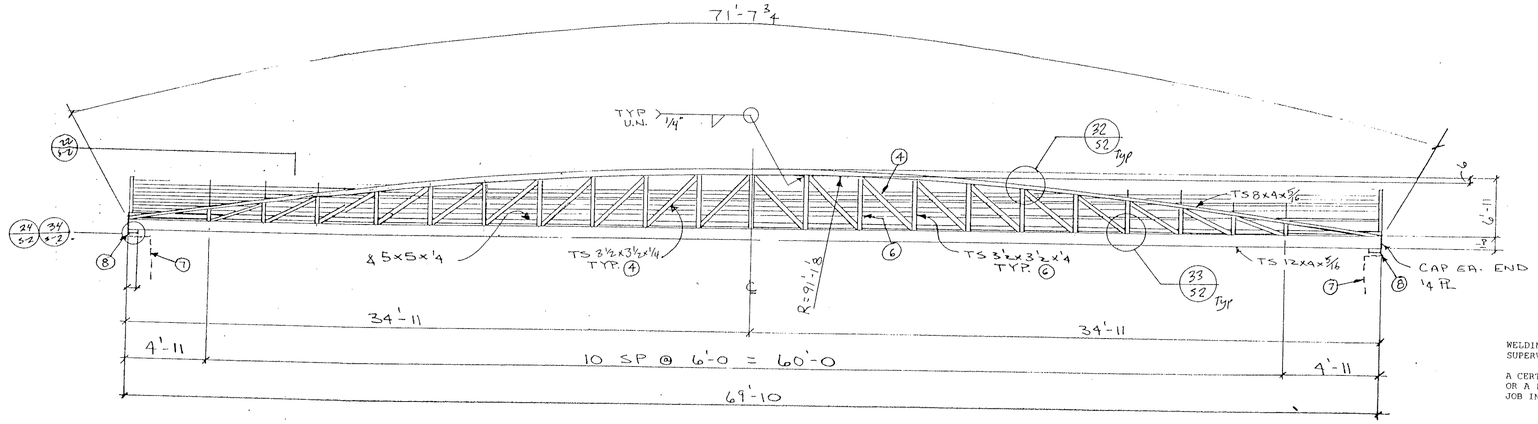

BRIDGE ELEVATION

N.T.S.

11

WELDING SHALL BE PERFORMED BY CERTIFIED WELDERS UNDER THE SUPERVISION OF A SPECIAL INSPECTOR.

A CERTIFICATE OF FABRICATION FROM THE SHOP PERFORMING THE WELDING OR A REPORT FROM THE SPECIAL INSPECTOR MUST BE FURNISHED TO THE JOB INSPECTOR PRIOR TO FRAMING APPROVAL.

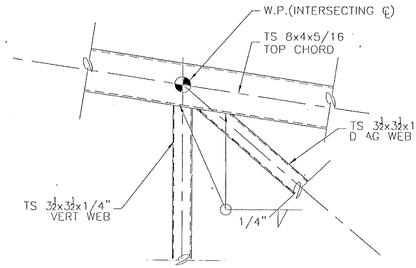

DETAIL

32

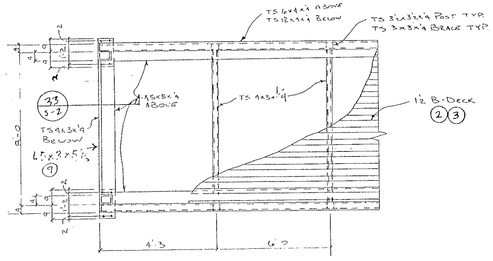

PLAN

N.T.S.

22

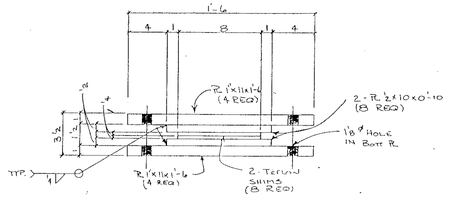

BASEPLATE

N.T.S.

12

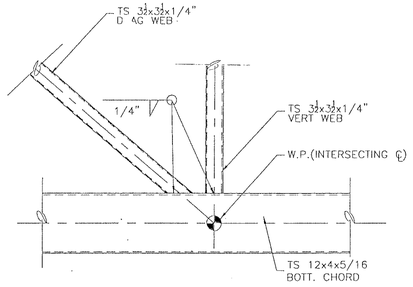

DETAIL

N.T.S.

33

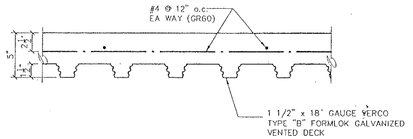

DETAIL

N.T.S.

23

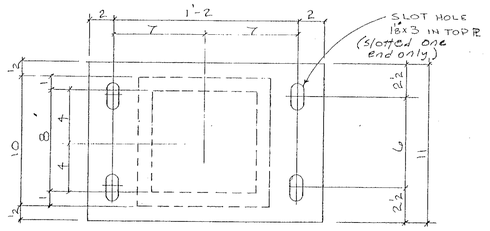

BASEPLATE

N.T.S.

13

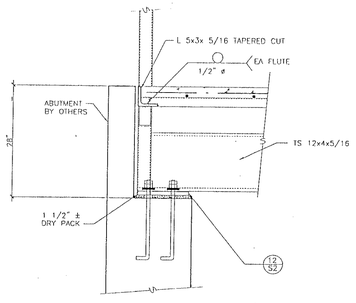

DETAIL

N.T.S.

34

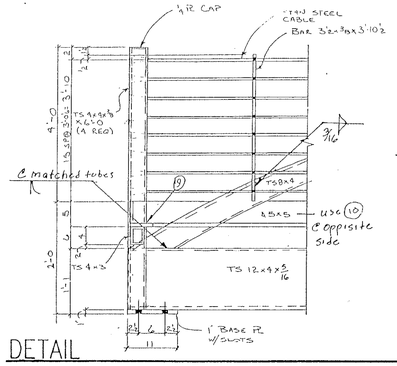

DETAIL

N.T.S.

24

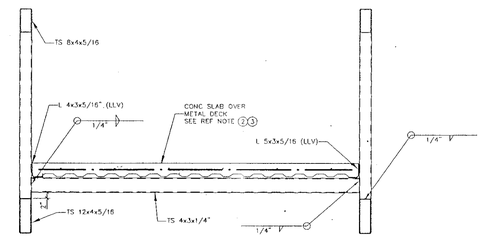

SECTION

N.T.S.

14

GENERAL NOTES

1. All work shall conform to: (A) the minimum standards of the 1994 Uniform Building Code and all related documents that are published by the I.C.B.O. which have been adopted by the local governing agency: (B) all regulations and ordinances of all governing agencies; and (C) any special conditions required by the local governing agencies.
2. A cerificate of construction compliance, signed by the General Contractor based upon his observation of the construction work shall be submitted to the inspecting Building Official prior to issuance of a certificate of completion.
3. Holdowns, anchor bolts, tiedown anchors, foundation straps, etc. shall be in place held by templates or wire ties, prior to concrete inspection.
4. Contractor shall coordinate and verify with bridge truss manufacturer the location of all required hardware, embedded items, etc. prior to pouring concrete for abutments.
5. Contractor shall coordinate with the owner for the selection of fencing to be supported on abutment walls (optional).
   A. Contractor shall submit shop drawings and proposed layout of all fence supports, embedded items, etc. to Engineer for approval prior to pouring concrete.
6. Design stresses are in accordance with AISC manual of Steel Construction, allowable stress design (9th edition) and the 1994 edition of the Uniform Building Code.
7. Design loads:
   A. 100 psf uniform live load on the full deck area or on 5,000 pound concentrated vehicle load.
   B. 12 psf wind load on projected height.
   C. Seismic Zone 4.
8. Special Inspection by a certified I.C.B.O. inspector shall be provided during fabrication and installation of bridge.
9. All steel except formlock decking shall be self weathering steel conforming to ASTM A588 (Fy = 46 ksi (min))
10. Durable metal sign shall be permanently affixed to the bridge stating "Maximum Load - 5000 pounds"

REFERENCE NOTES

1. General Typical Notes.
   A. See General Structural Notes (GSN) Sheet S-1.
   B. See Civil Drawings for all Finish Grades, abutment location, utilities and site information.
   C. General Contractor shall verify all dimensions shown on these drawings with abutment drawings (by others)
2. 1-1/2" x 18" gauge Type "B" Formlok galvanized vented floor deck.
   A. Span decking shown thus ⟷
   B. Fasten decking to supports with 1/2" diameter puddle welds at each flute.
   C. Side laps shall be button punched @ 12" o.c.
   D. DECK SHALL CONFORM TO ICBO ER 2478P
3. 5" Concrete slab and metal deck.
   A. Concrete shall be regular weight (145 P.C.F.) with fc = 3000 psi at 28 days.
   B. Reinforce slab with #4 @ 12" o.c. each way. (GR60)
   C. See Concrete Notes, Sheet S-1 for required placement and testing.
   D. See 22/S-2
4. TS 3 1/2 x 3 1/2 x 1/4" Diagonal web
5. L 5x3x 5/16 cont.
6. TS 3 1/2 x 3 1/2 x 1/4" Railing post / vert web.
7. Concrete abutment/retaining wall by others.
   A. See sheets S3 & S4 by others
8. 11"x1" Brearing Plate x 1'-2"
   A. See 13/S-2 & 14/S-2
9. L 5x3x5/16 closure angle
   A. Taper cut top leg for slope
10. L 4x4x1/4 cont

REVISIONS	BY
1 3/30/99	LS
2 7/15/99 Plan Check	LS

THESE DRAWINGS, NOTES AND DETAILS ARE INSTRUMENTS OF SERVICE PREPARED BY LAMPMAN & SMITH, A CALIFORNIA STRUCTURAL ENGINEERING CORPORATION. ALL DESIGNS AND ARRANGEMENTS REPRESENTED WITH THESE DESIGNS AND ARRANGEMENTS SHALL REMAIN THE PROPERTY OF THE ENGINEER. NO PART THEREOF SHALL BE COPIED, DISCLOSED TO OTHERS OR USED IN CONNECTION WITH ANY WORK OR PROJECT OTHER THAN THE SPECIFIC PROJECT FOR WHICH THEY HAVE BEEN PREPARED AND DEVELOPED WITHOUT THE EXPRESSED WRITTEN CONSENT OF LAMPMAN & SMITH.
COPYRIGHT 1999.

LAMPMAN & SMITH
STRUCTURAL ENGINEERING CORPORATION
225 PRADO ROAD, SUITE G
SAN LUIS OBISPO, CA 93401
PHONE: (805) 544-9173
FAX: (805)-543-2830

RENEWAL 6/30/99 35470 REGISTERED STRUCTURAL ENGINEER STATE OF CALIFORNIA

7-15-99

Elevation & Structural Details

Pedestrian Bridge
For:
Arbor's San Luis Limited Partnership
Prepared for: Central Coast Fabrication

DATE	3/9/99
SCALE	SHOWN
DRAWN	L&S
JOB	LS99034
SHEET	S-2
OF	4 SHEETS

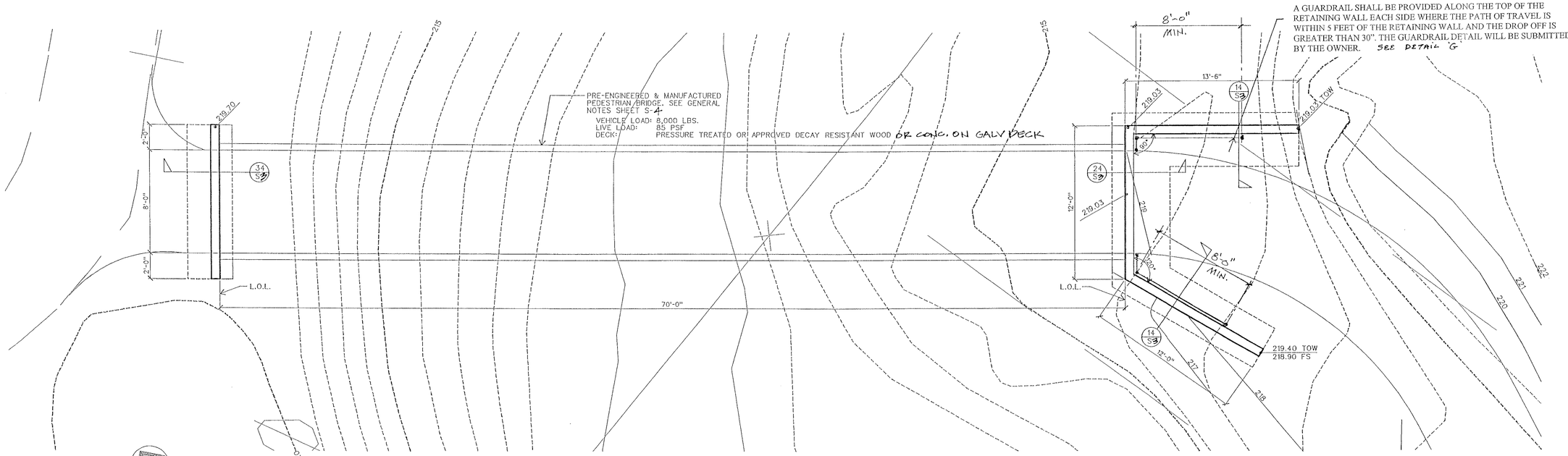

PEDESTRIAN BRIDGE NO. 1 PLAN

1/4"-1'-0"

NOTES:

1. SLOPE TOP OF WALL BETWEEN TOP OF WALL ELEVATIONS SHOWN.
2. ALL TOP OF FOOTING ELEVATIONS ARE TO BE FIELD VERIFIED TO MAINTAIN MINIMUM EMBEDMENT INTO BEDROCK SHOWN ON THE DETAILS.
3. EXISTING AND FINISH CONTOURS SHOWN HEREON ARE FOR INFORMATION ONLY - SEE GRADING AND DRAINAGE PLAN BY RRM DESIGN GROUP.
4. FOR BRIDGE LOCATIONS, FENCES AND GAURDRAILS SEE CIVIL DWGS.

NOTE:

THESE PLANS WERE REVIEWED BY GEOSOLUTIONS, LLC. THE CONCLUSIONS AND RECOMMENDATIONS FROM THEIR REVIEW ARE PRESENTED IN A LETTER DATED 3/11/99 FOUNDATION EXCAVATIONS SHALL CONFORM TO THE RECOMMENDATIONS SHOWN IN THAT LETTER AS WELL AS THE REQUIREMENTS OF THE SOILS INVESTIGATION REPORT NOTED ON SHEET S4

PRIOR TO THE CONTRACTOR REQUESTING A BUILDING DEPARTMENT FOUNDATION INSPECTION THE SOILS ENGINEER SHALL ADVISE THE BUILDING OFFICIAL IN WRITING THAT:

A) ALL GRADING WAS PERFORMED IN ACCORDANCE WITH THE SOILS REPORT
B) THE UTILITY TRENCHES HAVE BEEN PROPERLY BACK-FILLED AND COMPACTED
C) THE FOUNDATION EXCAVATIONS COMPLY WITH THE INTENT OF THE SOILS REPORT

G GUARDRAIL

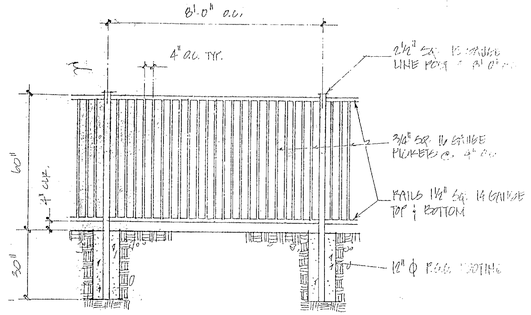

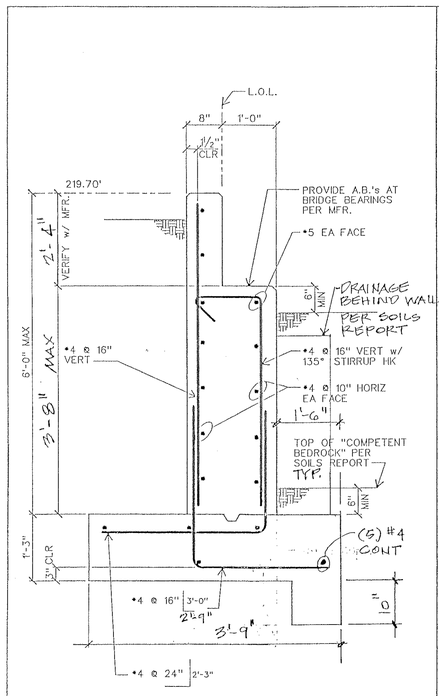

34 C.I.P. ABUTMENT WALL

807detb

3/4"-1'-0"

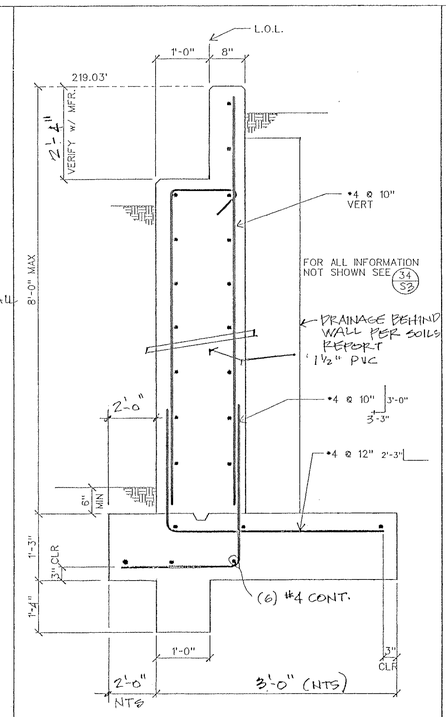

24 C.I.P. ABUTMENT WALL

807detb

3/4"-1'-0"

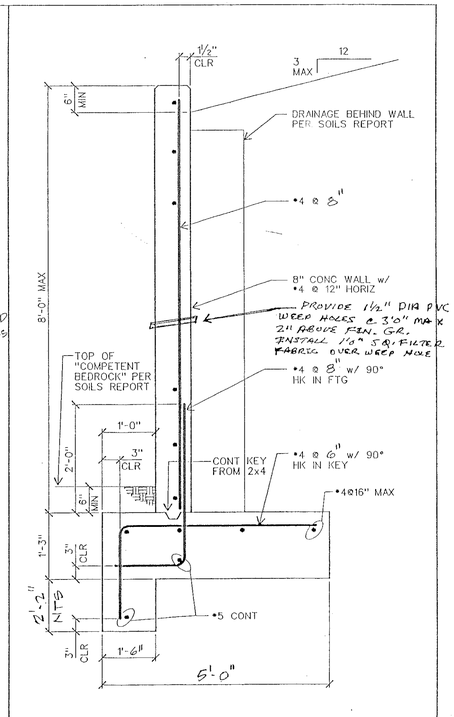

14 RETAINING WALL

807detc

3/4"-1'-0"

REGISTERED PROFESSIONAL ENGINEER
KEVIN T. DEVANEY
NO. 38053
Exp. 3-31-01
CIVIL
STATE OF CALIFORNIA

REVISIONS	
NO.	DATE:

TRACT 1750 PHASE IV
BICYCLE PATH PEDESTRIAN BRIDGES

BRIDGE NO. 1 PLAN AND DETAILS

THESE DRAWINGS AND THE DESIGNS INCORPORATED THEREIN ARE THE PROPERTY OF THE DEVANEY COMPANY AND NO PART SHALL BE COPIED OR ASSIGNED TO ANY OTHER PROJECT WITHOUT THE WRITTEN CONSENT OF THE DEVANEY COMPANY

THE DEVANEY COMPANY
CONSULTING ENGINEERS
1390 SAWLEAF COURT SAN LUIS OBISPO, CA 93401
(805) 434-2219

DATE: 7 MAY 98
DRAWN BY: GDW
CHECKED BY: K.T.D.
PROJECT NO.: 9807

SHEET NO.
S-3
OF 4

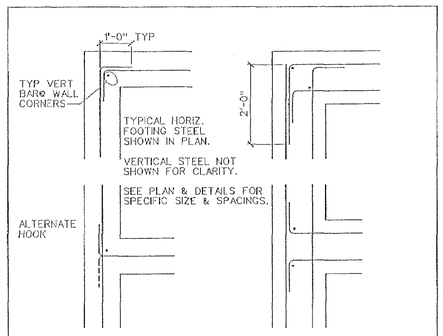

32	TYPICAL CONCRETE CORNER REINFORCING	3/4"=1'-0" 1.01.14 FOUNDATION

NOTE

R-3 BAR DIA MIN #3 TO #8
R-4 BAR DIA MIN #9, #10, & #11
R-5 BAR DIA MIN #14 & LARGER

STANDARD 90° HOOK

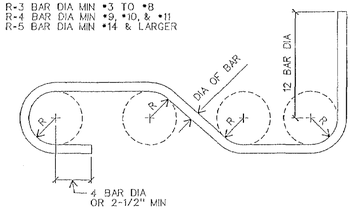

STANDARD 180° HOOK

33	TYPICAL PRINCIPAL REINFORCING	NO SCALE 1.01.15 FOUNDATION

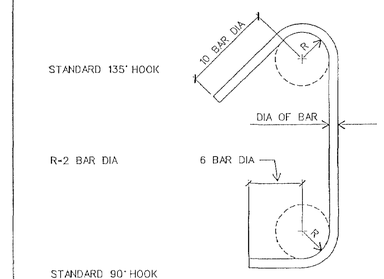

34	TYPICAL STIRRUP & HOOP REINFORCING	NO SCALE 1.01.16 FOUNDATION

GENERAL STRUCTURAL NOTES

GENERAL

1. The Contractor shall verify all dimensions and conditions at the job site prior to starting construction. Notify the Engineer immediately if any discrepancies or inconsistencies are found.
2. Details shown on the structural drawings are typical. Similar details apply to similar conditions. In the event certain aspects of the work are not fully detailed on the drawings or specified in these structural notes, the construction shall be of the same character as for similar conditions that are shown or specified and shall be reviewed by the Engineer.
3. Existing conditions shown on these drawings are to be field verified by the Contractor as the work progresses. Notify the Engineer immediately if existing conditions are discovered which are different than those shown. Construction shall not proceed until written instructions have been received from the Engineer.
4. Notes and details on the drawings shall take precedence over these general notes and typical details. Dimensions shown on the drawings shall take precedence over scale.
5. These structural drawings and general notes represent the finished structure. Unless otherwise indicated, they do not specify the method of construction. The Contractor shall provide all measures necessary to protect the structure, workmen and other persons during construction. Such measures shall include, but not be limited to, bracing of sufficient strength and stiffness to resist all loads, including wind and seismic loads, imposed on all elements of the structure; shoring for construction equipment, earth banks and retaining walls; forms, scaffolding and planking. These protective measures are the sole responsibility of the Contractor and site visits by the Engineer shall not include observation of same.
6. Openings, pockets, etc. shall not be placed in foundations, walls, etc. unless specifically detailed on the structural drawings.
7. All phases of the work shall conform to the minimum standards of the 1994 Uniform Building Code (U.B.C.), these structural notes, and all local ordinances.
8. All ASTM specifications noted on these drawings or general notes shall be of the latest revision.
9. Special Inspection in accordance with Section 306 of the U.B.C. shall be provided by a qualified person who is acceptable to the Engineer and Building Department for the following types of work:
   a. Concrete placing.
   b. Reinforcing steel placing.
10. The contractor shall contact the Engineer a minimum of 24 hours prior to reaching the following phases of the work.
    a. Placing of concrete.
    b. All structural work completed.

FOUNDATION

1. Foundation design based on soil investigation by Terratech, Inc. Report No. 304006 dated October 1996

   The design shown hereon is based on the following parameters:

a.	Active equivalent fluid pressure:	50 pcf + 1 pcf for each degree of slope inclination where the retained surface slopes upward from the wall
b.	Passive equivalent fluid pressure:	400 psf (in bedrock)
c.	Coefficient of sliding friction:	0.4 (in bedrock)
d.	Maximum toe pressure:	3000 psf (in bedrock)

   The project Soils Engineer shall review these drawings and design parameters and provide a letter stating that the design shown hereon is in conformance with the findings, conclusions and recommendations of the above referenced soils investigation and Soils Engineering Report prior to construction
2. Allowable soil bearing values and foundation design are based on soil conditions shown by test borings. Actual soil conditions which deviate appreciably from that shown in the test borings or buried structures found during earthwork operations shall be reported to the Engineer immediately.
3. All site work and grading shall be done in accordance with the Soils Engineering Report.
4. Excavations for foundations shall conform to the lines and dimensions shown on the drawings. Remove all loose material and debris from excavations and de-water excavations as required to maintain dry working conditions. The Soils Engineer shall approve all site work and foundation excavations prior to installing reinforcing steel or placing concrete.
5. The Soils Engineer shall approve all backfill materials prior to placement and observe backfill operations.
6. The bottom of all footings shall be horizontal. Where adjoining footings bear at different elevations the bottom of the footings shall be stepped as detailed on the drawings.

PEDESTRIAN BRIDGES

1. Design: The bridges shall be rectangular tube truss type with one diagonal per panel fabricated from atmospheric corrosion resistant steel. The design shall be in accordance with the "Specifications for Highway Bridges" of the American Association of State Highway and Transportation Officials (AASHTO) and the "Specification for the Design, Fabrication and Erection of Structural Steel for Buildings" by the American Institute of Steel Construction (AISC). The bridges shall be designed to resist all dead loads together with the live loads shown on the drawings. Each bridge shall be designed and fabricated as one unit with no field splices.
2. Railings: The railing height shall be 42" above the finish surface of the bridge deck with a maximum rail opening of 4".
3. Material: The bridges shall be fabricated from high strength, self weathering, low alloy atmospheric corrosion resistant ASTM A847 cold formed welded square and rectangular tubing and ASTM A588 plate and structural shapes. All truss members shall be tubular shapes.
4. Welding: In accordance with the American Welding Society Specifications, AWS D1.1.
5. Camber: The bridge shall be fabricated with camber for full dead plus live load deflection.
6. Cleaning: After fabrication all structural steel shall be blast cleaned in accordance with the latest edition of the Steel Structures Painting Council Surface Preparation Specifications No. 6, Commercial Blast Cleaning, SSPC-SP6.
7. Shop Drawings: The manufacturer shall submit 6 sets of complete shop drawings and engineering calculations stamped and signed by a licensed Civil Engineer currently registered in the State of California. Shop drawings and calculations shall include anchor bolt size, spacing, location and placement; bearing and slip plate details; complete vertical and horizontal abutment reaction, stress, deflection and camber calculations.

CONCRETE

1. All concrete work shall be performed in accordance with the latest edition of the ACI *Building Code (ACI 318)* and the latest edition of the *ACI Manuals of Concrete Practice.*
2. Submit concrete mix designs to Engineer for review. Mix designs shall be prepared under the supervision of a Civil Engineer registered in the State of California and bear his signature.
3. Concrete strength: 3000 psi @ 28 days.
4. Minimum cement content: 5.3 sacks per yard.
5. Maximum water-cement ratio: 7 gal. per sack.
6. Aggregate size: 1". Provide the maximum ratio of coarse aggregate to fine aggregate consistent with placing requirements, minimum 60% coarse aggregate.
7. Maximum slump: 4-1/2" per ASTM C143.
8. Concrete materials:
   a. Cement: Portland Type II, ASTM C150.
   b. Coarse aggregate: ASTM C33.
   c. Fine aggregate: ASTM C33. Reactivity ratio Sc/Rc shall not exceed one (1) per ASTM C289.
   d. Water: potable.
   e. Ready-mixed concrete: ASTM C94.
   f. Water reducing admixture: Polyheed at the maximum dosage recommended by the manufacturer. When the average daily temperature is below 55 degrees F. use Pozzolith 322N at the rate of 7 oz. per sack.
   g. Air entraining admixture: MBVR or Darex of strength required to provide between 3-1/2% and 5% of entrained air.
9. Reinforcing materials:
   a. #3 bars and smaller: ASTM A615 Grade 40 or Grade 60.
   b. #4 bars and larger: ASTM A615 Grade 60.
10. Miscellaneous materials:
    a. Non shrink grout and/or drypack: MinWax Por-Rok or approved equal. Mix with the minimum amount of water required to obtain the consistency necessitated by placing conditions.
    b. Curing compounds: Water based liquid membranes conforming to ASTM C309 when tested in accordance with ASTM C156: Euco Aqua-Cure or approved equal.
    c. Expansion joint material: Conform to ASTM D-1751.
11. Welding of reinforcing steel: Reinforcing steel shall not be welded unless specifically detailed on the drawings or directed by the Engineer. All welding of reinforcing steel shall be in accordance with the latest edition of "Recommended Practice for Welding Reinforcing Steel, Metal Inserts, and Connections in Reinforced Concrete Construction" by the AWS (AWS D1.4). Use low hydrogen E80xx or E90xx electrodes for welding of reinforcing steel.
12. Lap splices: 40 bar diameters or 1'-6", whichever is greater.
13. Cover to bars:
    a. When concrete is placed against ground: 3".
    b. When concrete is placed against forms but after form removal will be in contact with ground or weather:
       #5 bars and smaller: 1-1/2"
       #6 bars and larger: 2"
    c. All others: 1-1/2".
14. Concrete curing: Keep concrete continuously wet for 7 days or apply curing compound in strict accordance with manufacturer's printed instructions.
15. Form removal: Remove forms in accordance with the following schedule:
    a. Side forms of footings: Minimum 2 days.
    b. Walls: *Minimum 10 days.*
16. Vibration: Vibrate all concrete in place with a mechanical vibrator used by experienced personnel.
17. Shop drawings: Submit to the Engineer for review. No reinforcing shall be placed until reviewed shop drawings have been received on the job. Shop drawings shall consist of bolt cut and placing sheets. Placing sheets shall contain all information required to position all reinforcing steel without having to refer to the structural drawings.
18. Projecting corners of walls shall be formed with a 3/4" chamfer unless detailed otherwise.
19. Testing:
    a. Laboratory: The Owner shall retain and pay for the services of a Testing Laboratory where samples will be tested in accordance with these structural notes and the applicable standards of the ASTM. Work under this division (to be performed by the Contractor) includes the taking and storage of samples and their delivery to the laboratory.
    b. Samples: Make 3 test cylinders for each day's pour.
    c. Testing of samples: Test each batch of 3 cylinders as follows: 1 at 7 days, and 2 at 28 days.
    d. Test reports: A copy of all test reports shall be submitted to the Engineer.

REGISTERED PROFESSIONAL ENGINEER
KEVIN T. DEVANEY
NO. 38953
Exp. 3-31-01
CIVIL
STATE OF CALIFORNIA

REVISIONS

NO.	DATE:

TRACT 1750 PHASE IV
BICYCLE PATH PEDESTRIAN BRIDGES

GENERAL NOTES & TYPICAL DETAILS

THESE DRAWINGS AND THE DESIGN REPRESENTED THEREBY ARE THE PROPERTY OF THE DEVANEY COMPANY AND NO PART SHALL BE COPIED OR USED IN CONNECTION WITH ANY OTHER PROJECT WITHOUT THE WRITTEN CONSENT OF THE DEVANEY COMPANY

THE DEVANEY COMPANY
CONSULTING ENGINEERS
1390 SAWLEAF COURT SAN LUIS OBISPO, CA 93401
(805) 434-2219

DATE: 7 MAY 98
DRAWN BY: GDW
CHECKED BY: K.T.D.
PROJECT NO.: 9807

SHEET NO.
S-4
OF 4

GENERAL STRUCTURAL NOTES

GENERAL NOTES

1. THE FOLLOWING NOTES, TYPICAL DETAILS AND SCHEDULES SHALL APPLY TO ALL PHASES OF THIS PROJECT UNLESS OTHERWISE SHOWN OR NOTED.

2. SPECIFIC NOTES AND DETAILS SHALL TAKE PRECEDENCE OVER GENERAL NOTES AND TYPICAL DETAILS.

3. ALL MATERIALS AND WORKMANSHIP SHALL CONFORM TO THE MINIMUM STANDARDS OF THE 1994 EDITION OF THE UNIFORM BUILDING CODE (U.B.C.) AND SUCH OTHER REGULATING AGENCIES EXERCISING AUTHORITY OVER ANY PORTION OF THE WORK. THE CONTRACTOR SHALL HAVE A COPY OF THE U.B.C. ON THE JOB SITE.

4. THE CONTRACTOR SHALL EXAMINE THE DRAWINGS AND SPECIFICATIONS (CONTRACT DOCUMENTS), AND SHALL NOTIFY THE ARCHITECT OR ENGINEER OF ANY DISCREPANCIES HE MAY FIND BEFORE PROCEEDING WITH THE WORK.

5. ALL INFORMATION ON EXISTING CONDITIONS SHOWN ON DRAWINGS ARE BASED ON BEST PRESENT KNOWLEDGE AVAILABLE, BUT WITHOUT GUARANTEE OF ACCURACY. THE CONTRACTOR SHALL VERIFY AND BE RESPONSIBLE FOR ALL DIMENSIONS AND CONDITIONS AT THE SITE AND SHALL NOTIFY THE ARCHITECT OR ENGINEER OF ANY DISCREPANCIES BETWEEN ACTUAL SITE CONDITIONS AND INFORMATION SHOWN ON DRAWINGS OR IN THE SPECIFICATIONS (CONTRACT DOCUMENTS) BEFORE PROCEEDING WITH WORK.

6. THE CONTRACTOR SHALL IMMEDIATELY NOTIFY THE ARCHITECT OR ENGINEER OF ANY CONDITION WHICH IN HIS OPINION MIGHT ENDANGER THE STABILITY OF THE STRUCTURE OR CAUSE DISTRESS OF THE STRUCTURE.

7. ALL WORK SHALL CONFORM TO THE BEST PRACTICE PREVAILING IN THE VARIOUS TRADES COMPRISING WORK. THE CONTRACTOR SHALL BE RESPONSIBLE FOR COORDINATING THE WORK OF ALL TRADES.

8. THESE NOTES, DETAILS, DRAWINGS AND SPECIFICATIONS (CONTRACT DOCUMENTS) REPRESENT THE FINISHED STRUCTURE, AND DO NOT INDICATE THE METHOD OF CONSTRUCTION. THE CONTRACTOR SHALL SUPERVISE AND DIRECT THE WORK AND SHALL BE SOLELY RESPONSIBLE FOR CONSTRUCTION MEANS, METHODS, TECHNIQUES, SEQUENCES AND PROCEDURES.

9. THE CONTRACTOR SHALL REFER TO THE SPECIFICATIONS FOR INFORMATION NOT COVERED BY THESE DRAWINGS AND GENERAL NOTES.

10. THE CONTRACTOR SHALL PROVIDE TEMPORARY BRACING AND SHORING FOR ALL STRUCTURAL MEMBERS AS REQUIRED FOR STRUCTURAL STABILITY OF THE STRUCTURE DURING ALL PHASES OF CONSTRUCTION.

11. THE CONTRACTOR SHALL TAKE ALL STEPS NECESSARY TO ENSURE PROPER ALIGNMENT OF THE STRUCTURE AFTER THE INSTALLATION OF ALL STRUCTURAL AND FINISH MATERIALS. THIS SHALL INCLUDE ANY NECESSARY PRELOADING OF THE STRUCTURE TO DETERMINE FINAL POSITION OF THE COMPLETED WORK.

12. OBSERVATION VISITS TO THE PROJECT SITE BY FIELD REPRESENTATIVES OF ARCHITECT AND/OR ENGINEER (SUPPORT SERVICES) SHALL NOT INCLUDE INSPECTIONS OF SAFETY OR PROTECTIVE MEASURES, NOR CONSTRUCTION PROCEDURES, TECHNIQUES OR METHODS. ANY SUPPORT SERVICES PERFORMED BY ARCHITECT OR ENGINEER DURING ANY PHASE OF CONSTRUCTION, SHALL BE DISTINGUISHED FROM CONTINUOUS AND DETAILED INSPECTION SERVICES (AS REQUIRED BY ANY REGULATING GOVERNMENTAL AGENCY, I.E. LOCAL BUILDING DEPARTMENT) PROVIDED BY OTHERS. THESE SUPPORT SERVICES, WHETHER OF MATERIAL OR WORK, ARE PERFORMED SOLELY FOR THE PURPOSE OF ASSISTING IN QUALITY CONTROL AND IN ACHIEVING CONFORMANCE WITH CONTRACT DOCUMENTS, BUT DO NOT GUARANTEE CONTRACTOR'S PERFORMANCE AND SHALL NOT BE CONSTRUED AS SUPERVISION OF CONSTRUCTION.

13. PROVIDE OPENINGS AND SUPPORTS AS REQUIRED PER TYPICAL DETAILS AND NOTES FOR MECHANICAL, AND ELECTRICAL EQUIPMENT, VENTS, DUCTS, PIPING, ETC. ALL MECHANICAL AND ELECTRICAL EQUIPMENT SHALL BE PROPERLY "SWAY BRACED" AGAINST LATERAL FORCES.

14. THESE NOTES, DETAILS, DRAWINGS AND SPECIFICATIONS (CONTRACT DOCUMENTS) DO NOT CARRY NECESSARY PROVISIONS FOR CONSTRUCTION SAFETY. THESE DOCUMENTS AND ALL PHASES OF CONSTRUCTION HEREBY CONTEMPLATED ARE TO BE GOVERNED, AT ALL TIMES, BY APPLICABLE PROVISIONS OF THE CURRENT CALIFORNIA OCCUPATIONAL SAFETY AND HEALTH ACT.

15. WHERE ANY CONFLICT OCCURS BETWEEN THE REQUIREMENTS OF FEDERAL, STATE AND LOCAL LAWS, CODES, ORDINANCES, RULES AND REGULATIONS, THE MOST STRINGENT WILL GOVERN.

16. REFER TO ARCHITECTURAL DRAWINGS TO COORDINATE WITH STRUCTURAL DRAWINGS, AND ANY DISCREPANCY BETWEEN THESE DRAWINGS SHALL BE REFERRED TO THE ARCHITECT OR ENGINEER FOR CLARIFICATION BEFORE START OF CONSTRUCTION.

17. WRITTEN DIMENSIONS SHALL HAVE PRECEDENCE OVER SCALED DIMENSIONS.

18. DRAWINGS (NOTES, SCHEDULES, DETAILS AND PLANS) SHALL HAVE PRECEDENCE OVER STRUCTURAL CALCULATIONS.

19. IN THE EVENT THAT CERTAIN FEATURES OF THE CONSTRUCTION ARE NOT FULLY SHOWN ON THE DRAWINGS OR CALLED FOR IN THE GENERAL NOTES OR SPECIFICATIONS, THEN THEIR CONSTRUCTION SHALL BE OF THE SAME CHARACTER AS FOR SIMILAR CONDITIONS THAT ARE SHOWN OR CALLED FOR.

20. CONTRACTOR SHALL HAVE A COPY OF PROJECT SOILS REPORT ON THE JOB SITE.

21. A.S.T.M. DESIGNATION AND ALL STANDARDS REFER TO THE LATEST AMENDMENTS.

22. MODIFICATIONS OF THESE NOTES, DETAILS, PLANS AND SPECIFICATIONS SHALL NOT BE MODIFIED WITHOUT PRIOR WRITTEN APPROVAL OF THE ARCHITECT OR ENGINEER.

23. ONLY "APPROVED" STRUCTURAL WORKING DRAWINGS (AND OTHER CONSTRUCTION DOCUMENTS) ARE PERMITTED TO BE USED FOR CONSTRUCTION ON THIS PROJECT. ALL OTHER DRAWINGS ARE OBSOLETE AND ARE NOT PERMITTED ON THE JOB SITE, NOR SHALL THEY BE USED FOR ANY CONSTRUCTION PURPOSES. CONTRACTORS USING UNAPPROVED DRAWINGS ARE SOLELY RESPONSIBLE FOR ALL WORK NOT PERFORMED IN ACCORDANCE WITH THE "APPROVED" DRAWINGS.

CONCRETE

1. ALL CONCRETE SHALL HAVE A MINIMUM ULTIMATE COMPRESSIVE STRENGTH OF 3,000 P.S.I. AT 28 DAYS. ALL CONCRETE SHALL BE REGULAR WEIGHT (UNLESS SPECIFICALLY NOTED OTHERWISE).

2. ALL CONCRETE WORK SHALL COMPLY WITH U.B.C. CHAPTER 19.

3. ALL SPECIAL INSPECTION SHALL BE PROVIDED IN ACCORDANCE WITH U.B.C CHAPTER 17, STRUCTURAL TESTS AND INSPECTIONS. WHERE SPECIAL INSPECTION IS REQUIRED, INSPECTION SHALL BE PROVIDED BY I.C.B.O. CERTIFIED INSPECTORS. SPECIAL INSPECTORS SHALL BE APPROVED BY LOCAL BUILDING AGENCY.

4. CEMENT SHALL BE PORTLAND CEMENT TYPE I OR II AND SHALL CONFORM TO U.B.C. STANDARD NO. 19-1 LOW ALKALI.

5. AGGREGATES SHALL CONFORM TO A.S.T.M. C33.

6. WHERE NOT SPECIFICALLY DETAILED, THE MINIMUM CONCRETE COVER ON REINFORCING STEEL SHALL BE:

   A. CONCRETE PLACED AGAINST FORMS, BUT EXPOSED TO EARTH OR WEATHER: 2"

7. REINFORCING BARS LARGER THAN #8 ARE NOT PERMITTED UNLESS SPECIFICALLY DETAILED OR NOTED OTHERWISE.

8. MINIMUM LAP FOR ALL REINFORCING BARS AT SPLICES: (SPLICES TO BE STAGGERED)

   #3, #4, #5 & #6------------24"
   #7-------------------------28"
   #8-------------------------32"

9. THE MINIMUM RADIUS OF BEND FOR REINFORCING STEEL (MEASURED ON THE INSIDE OF BAR) SHALL BE AS FOLLOWS:

   #3----------------------1 1/8"   #6---------------2 1/4"
   #4----------------------1 1/2"   #7---------------2 5/8"
   #5----------------------1 7/8"   #8-----------------3"

10. ALL ANCHOR BOLTS USED IN CONCRETE CONSTRUCTION SHALL HAVE A MINIMUM TOTAL EMBEDMENT AS FOLLOWS, U.O.N.:

   5/8" DIA OR SMALLER------------7"
   3/4" DIA-----------------------8"
   7/8" DIA-----------------------9"
   1" DIA------------------------10"

11. LOCATION OF ALL CONSTRUCTION JOINTS, OTHER THAN SPECIFIED, SHALL BE APPROVED BY ARCHITECT/ENGINEER PRIOR TO POURING. CONSTRUCTION JOINTS SHALL BE THOROUGHLY AIR AND WATER CLEANED AND HEAVILY ROUGHENED SO AS TO EXPOSE COARSE AGGREGATES. ALL SURFACES TO RECEIVE CONCRETE SHALL BE MAINTAINED CONTINUOUSLY WET AT LEAST THREE HOURS IN ADVANCE OF POURING.

12. ALL REINFORCING STEEL, ANCHOR BOLTS, DOWELS, INSERTS AND ANY OTHER HARDWARE TO BE SET IN CONCRETE SHALL BE WELL SECURED IN POSITION PRIOR TO POURING OF CONCRETE.

13. ARCHITECT OR ENGINEER AND INSPECTOR SHALL BE NOTIFIED FOR REINFORCING INSPECTION PRIOR TO POURING ANY CONCRETE.

14. CONTRACTOR SHALL OBTAIN APPROVAL FROM ARCHITECT OR ENGINEER PRIOR TO PLACING SLEEVES, PIPES, DUCTS, CHASES, CORING AND OPENINGS ON OR THROUGH STRUCTURAL CONCRETE FLOOR SLABS, UNLESS SPECIFICALLY DETAILED OR NOTED.

15. FORMWORK DESIGN AND REMOVAL SHALL CONFORM TO U.B.C. SECTION 1906.

16. VIBRATE ALL CONCRETE (INCLUDING SLABS ON GRADE) AS IT IS PLACED, WITH A MECHANICAL VIBRATOR OPERATED BY EXPERIENCED PERSONNEL. THE VIBRATOR SHALL BE USED TO CONSOLIDATE THE CONCRETE, NOT TRANSPORT IT. REINFORCING AND FORMS SHALL NOT BE VIBRATED.

17. ALL CONCRETE WORK SHALL BE DONE IN ACCORDANCE WITH THE LATEST EDITION OF THE A.C.I. BUILDING CODE (A.C.I. 318-95) AND THE LATEST EDITIONS OF THE A.C.I. MANUALS OF CONCRETE PRACTICE.

18. CONCRETE SHALL NOT FREE FALL MORE THAN SIX FEET. USE TREMIE, PUMP OR OTHER APPROVED METHODS.

19. CONCRETE SHALL BE MAINTAINED IN A MOIST CONDITION FOR A MINIMUM OF 5 DAYS AFTER PLACEMENT.

20. CONTRACTOR SHALL SUBMIT REQUESTS FOR USE OF ADMIXTURES TO ARCHITECT OR ENGINEER FOR HIS REVIEW.

21. MIX DESIGNS SHALL BE PREPARED BY AN APPROVED TESTING LABORATORY AND SHALL BE SUBMITTED TO THE ARCHITECT OR ENGINEER FOR REVIEW.

22. ONLY ONE GRADE OF CONCRETE SHALL BE ALLOWED ON PROJECT SITE AT ANY ONE TIME.

23. CONCRETE STRENGTH (FOR CONCRETE DESIGN STRENGTHS EXCEEDING 2,500 P.S.I.) SHALL BE VERIFIED BY STANDARD CYLINDER TESTS (IN ACCORDANCE WITH U.B.C. SECTION 1905) MADE BY AN APPROVED TESTING LABORATORY. CONTRACTOR SHALL MAINTAIN COPIES OF TEST REPORTS AT JOB SITE AND AVAILABLE FOR REVIEW AND INSPECTION BY BUILDING OFFICIALS. MAKE 3 TEST CYLINDERS FOR EACH DAY'S POUR. TEST EACH BATCH OF CYLINDERS AS FOLLOWS: 1 AT 7 DAYS, AND 2 AT 28 DAYS.

REINFORCING STEEL

1. ALL REINFORCING STEEL SHALL BE DEFORMED INTERMEDIATE GRADE BARS CONFORMING TO A.S.T.M. A-615, GRADE 60.

2. REINFORCING STEEL SHALL NOT BE WELDED, UNLESS SPECIFICALLY NOTED OTHERWISE.

3. WELDING OF REINFORCING STEEL (WHERE SPECIFICALLY NOTED OR DETAILED) SHALL CONFORM TO U.B.C. STANDARD NO. 19-28.

4. TO HOLD REINFORCING BARS IN THEIR TRUE POSITION AND PREVENT DISPLACEMENT, STANDARD TIE AND ANCHORAGE DEVICES MUST BE PROVIDED. PLACING OF REINFORCEMENT SHALL CONFORM TO U.B.C. SECTION 1907.5.

5. SHOP DRAWINGS FOR FABRICATION OF ANY REINFORCING STEEL SHALL BE APPROVED BY CONTRACTOR AND SUBMITTED TO ARCHITECT OR ENGINEER, FOR HIS REVIEW, PRIOR TO FABRICATION.

6. REFER TO CONCRETE NOTES FOR MINIMUM SPLICE LENGTH AND MINIMUM RADIUS OF BEND, OF REINFORCING STEEL.

7. STAGGER SPLICES IN REINFORCING STEEL, UNLESS SPECIFICALLY NOTED OTHERWISE.

8. ALL REINFORCING BAR BENDS SHALL BE MADE COLD.

9. FABRICATION, ERECTION AND PLACEMENT OF REINFORCING STEEL SHALL CONFORM TO CONCRETE REINFORCING STEEL INSTITUTE OF STANDARD PRACTICE.

10. REINFORCING STEEL SHALL BE CLEAN OF RUST, GREASE OR OTHER MATERIAL LIKELY TO IMPAIR BOND.

STRUCTURAL STEEL AND WELDING

1. ALL STRUCTURAL STEEL SHALL CONFORM TO A.S.T.M. A-36 AND U.B.C. STANDARD NO. 22-1.

2. SPECIAL INSPECTION SHALL BE PROVIDED FOR ALL STRUCTURAL WELDING, IN ACCORDANCE WITH U.B.C. CHAPTER 17.

3. ALL STRUCTURAL STEEL SHALL BE FABRICATED AND ERECTED IN ACCORDANCE WITH A.I.S.C. SPECIFICATIONS AND CODE OF STANDARD PRACTICE AS AMENDED TO DATE.

4. ALL WELDING SHALL BE DONE BY QUALIFIED AND CERTIFIED WELDERS.

5. NO FIELD WELDING PERMITTED, UNLESS SPECIFICALLY NOTED OTHERWISE.

6. SHOP DRAWINGS FOR THE FABRICATION OF ANY STRUCTURAL STEEL SHALL BE APPROVED BY CONTRACTOR AND SUBMITTED TO ARCHITECT OR ENGINEER FOR HIS REVIEW, PRIOR TO FABRICATION.

7. NO HOLES OTHER THAN THOSE SPECIFICALLY DETAILED SHALL BE ALLOWED THROUGH STRUCTURAL STEEL MEMBERS. BURNING OF HOLES IS NOT PERMITTED.

8. STEEL PIPE COLUMNS SHALL BE WELDED SEAMLESS PIPE CONFORMING TO A.S.T.M., A-53, GRADE B.

9. ALL STRUCTURAL STEEL SHALL BE PAINTED ONE SHOP COAT AND FIELD TOUCHED-UP WITH RED LEAD (OR APPROVED ZINC CHROMATE PRIMER) AS NECESSARY.

10. ALL BOLTS SHALL CONFORM TO A.S.T.M., A-307-68. (U.O.N.)

11. ALL WELDING SHALL CONFORM TO 'AWS' SPECIFICATION FOR WELDING. (E-70XX ELECTRODES).

12. ALL HEADED STUDS (FOR CONCRETE ANCHORAGE) SHALL BE MANUFACTURED BY 'NELSON' OR APPROVED EQUAL.

13. STRUCTURAL TUBE COLUMNS SHALL BE A.S.T.M. A500 GRADE B.

14. WHERE FILLET WELD SIZE IS NOT INDICATED, USE 'AWS' MINIMUM SIZE BASED ON THE THICKNESS OF THE THICKER PART BEING WELDED, AS SPECIFIED IN A.I.S.C. MANUAL OF STEEL CONSTRUCTION, EIGHTH EDITION SECTION 1.17.2.

15. ALL BUTT WELDS TO BE FULL PENETRATION, UNLESS SPECIFICALLY NOTED OTHERWISE.

16. WELDER QUALIFICATION REQUIREMENTS, WELDING PROCEDURE AND WELDING ELECTRODES FOR ALL STRUCTURAL STEEL (EXCEPT STRUCTURAL SHEET STEEL, SEE STEEL DECKING) SHALL CONFORM TO U.B.C. STANDARD NO. 22-1.

17. FABRICATION, ERECTION AND WELDING OF STRUCTURAL STEEL SHALL CONFORM TO U.B.C. STANDARD NO. 22-1.

STEEL DECKING

1. STEEL DECKING SHALL BE COLD ROLLED STEEL CONFORMING TO A.S.T.M. A-611-70, GRADE D STRUCTURAL QUALITY STEEL SHEET, AND HAVE A MINIMUM YIELD STRENGTH (Fy) OF 40 KSI.

2. STEEL DECKING MANUFACTURER SHALL SUBMIT TO ARCHITECT/ENGINEER SHOP DRAWINGS FOR HIS REVIEW PRIOR TO FABRICATION.

3. ALL DECKING SIDE LAPS SHALL BE COMPATIBLE.

4. STEEL DECKING SHALL HAVE A PRIME PAINTED FINISH.

5. STEEL FLOOR DECK SHALL BE 18 GAUGE VERCO TYPE B, OR APPROVED EQUAL.

6. STEEL DECKING SHEETS SHALL BE CONTINUOUS OVER A MINIMUM OF 3 SUPPORTS (2 SPANS).

7. STEEL DECK SHALL BE PLACED ON THE SUPPORTING FRAMEWORK WITH A MINIMUM END LAP OF 2 INCHES, CENTERED OVER THE SUPPORTS.

8. THE DECK SHALL BE WELDED TO THE SUPPORTS AND SIDE LAP OF ADJACENT UNITS WELDED OR BUTTON PUNCH AS SHOWN ON THESE STRUCTURAL DRAWINGS.

   - 3 WELDS PER SHEET AT ALL SUPPORTS
   - 1-1/2" SIDE LAP WELDS AT MIDSPANS OR BUTTON PUNCH

9. WELDING OF STEEL DECK SHALL BE IN ACCORDANCE WITH LATEST AWS SPECIFICATIONS FOR WELDING SHEET STEEL IN STRUCTURES AND AS SHOWN ON THESE STRUCTURAL DRAWINGS.

10. STEEL DECK SHALL BE ERECTED AND FASTENED IN ACCORDANCE WITH THE MANUFACTURER'S SPECIFICATIONS AND ERECTION LAYOUT, AS WELL AS REQUIREMENTS SET FORTH IN THESE STRUCTURAL DRAWINGS.

11. NO HOLES SHALL BE CUT INTO STEEL DECKING UNLESS SPECIFICALLY NOTED OR DETAILED OTHERWISE.

12. WELD METAL SHALL PENETRATE ALL LAYERS OF DECK MATERIAL AT EACH END AND SIDE JOINTS AND HAVE GOOD FUSION TO THE SUPPORTING MEMBERS.

13. ELECTRODES E60 OR E70 WITH A MINIMUM SIZE OF 1/8".

14. FOR WELDING OF STRUCTURAL SHEET STEEL, WELDER QUALIFICATION REQUIREMENTS, WELDING PROCEDURES AND WELDING ELECTRODES SHALL CONFORM TO U.B.C. STANDARD NO. 27-13.

15. CONTINUOUS INSPECTION IS REQUIRED FOR STEEL DECKING WELDING.

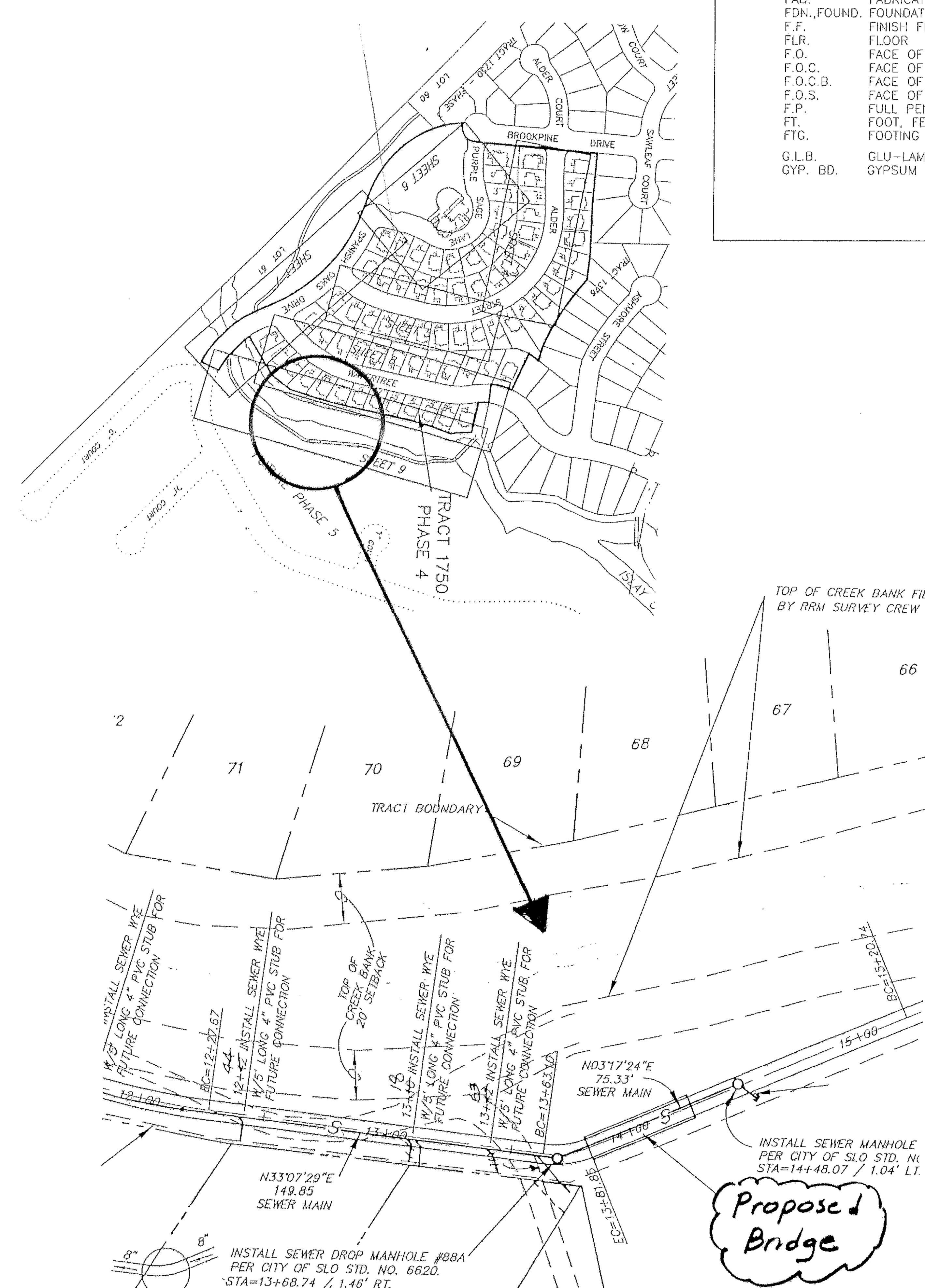

ABBREVIATIONS

@	AT	HDR.	HEADER
A.B	ANCHOR BOLT	HD.	HOLDOWN
ABV.	ABOVE	HOR.	HORIZONTAL
A.C.I	AMERICAN CONCRETE INSTITUTE	H.S.B.	HIGH STRENGTH BOLT
A.I.T.C	AMERICAN INSTITUTE OF TIMBER CONSTRUCTION	HT.	HEIGHT
ALUM.	ALUMINUM	I.C.B.O	INTERNATIONAL CONFERENCE OF BUILDING OFFICIALS
A.S.T.M.	AMERICAN SOCIETY OF TESTING AND MATERIALS	IN.	INCH,INCHES
		INT.	INTERIOR
BLDG.	BUILDING	JST.,JSTS.	JOIST,JOISTS
BLK.	BLOCK	LTWT.	LIGHTWEIGHT
BLKD.	BLOCKED	MAX.	MAXIMUM
BLKG.	BLOCKING	M.B.	MACHINE BOLT
BM.,BMS.	BEAM, BEAMS	MECH.	MECHANICAL
B.O.	BOTTOM OF	MFR.	MANUFACTURED
BOT.	BOTTOM	MIN.	MINIMUM
BRG.	BEARING	M.L.B	MINI-LAMINATED BEAM
B/T	BETWEEN	MTD.	MOUNTED
C.A.C	CALIFORNIA ADMINISTRATIVE CODE	MTL.	METAL
CANT.	CANTILEVER	N.T.S.	NOT TO SCALE
	CENTERLINE	O.A.	OVERALL
CLG.	CEILING	O.C.	ON CENTER
CLR.	CLEAR	PL	PLATE
COL.	COLUMN	PLYWD.	PLYWOOD
CONC.	CONCRETE	P.S.I	POUNDS PER SQUARE INCH
CONC.BLK.	CONCRETE BLOCK	P.W.	PUDDLE WELD
CONN.	CONNECTION	RDWD.	REDWOOD
CONST.	CONSTRUCTION	REINF.	REINFORCEMENT
CONT.	CONTINUE,CONTINUOUS	RET.	RETAINING
C.O.S.	CORNER OF STUD	REQ'D	REQUIRED
ø	DIAMETER	S.F.	SQUARE FEET
d	PENNY	SHT.	SHEET
DBL.	DOUBLE	SIM.	SIMILAR
DET.	DETAIL	SQ.	SQUARE
D.F	DOUGLAS FIR	S.S.	SELECT STRUCTURAL
DIAG.	DIAGONAL	STAGG'D	STAGGERED
DWGS.	DRAWINGS	STAND.,STD.	STANDARD
EA.	EACH	STL.	STEEL
ELEC.	ELECTRIC,ELECTRICAL	S.W.	SLOT WELD
ELEV.	ELEVATION	T&G	TONGUE AND GROOVE
EMBED.	EMBEDDED,EMBEDMENT	T.O.	TOP OF
EQUIP.	EQUIPMENT	T.O.C.	TOP OF CONCRETE
E.S.	EXTRA STRONG	T.O.F.	TOP OF FOOTING
E.W.	EACH WAY	T.O.S.	TOP OF SLAB
EXIST.	EXISTING	T.O.W.	TOP OF WALL
EXT.	EXTERIOR	T.S.	TUBE SECTION
FAB.	FABRICATED	TYP.	TYPICAL
FDN.,FOUND.	FOUNDATION	U.B.C.	UNIFORM BUILDING CODE
F.F.	FINISH FLOOR	UNBLKD.	UNBLOCKED
FLR.	FLOOR	U.O.N.	UNLESS OTHERWISE NOTED
F.O.	FACE OF	VERT.	VERTICAL
F.O.C.	FACE OF CONCRETE	W/	WITH
F.O.C.B.	FACE OF CONCRETE BLOCK	WD.	WOOD
F.O.S.	FACE OF STUD	WT.	WEIGHT
F.P.	FULL PENETRATION	W.W.M.	WOVEN WIRE MESH
FT.	FOOT, FEET		
FTG.	FOOTING		
G.L.B.	GLU-LAMINATED BEAM		
GYP. BD.	GYPSUM BOARD		

APPROVED
FEB 24, 1999
ENGINEERING DIVISION
CITY OF SAN LUIS OBISPO

REVISIONS	BY

THESE DRAWINGS, NOTES AND DETAILS ARE INSTRUMENTS OF SERVICE AND ARE THE PROPERTY OF LAMPMAN & SMITH, A STRUCTURAL ENGINEERING CORPORATION. ALL DRAWINGS, INFORMATION, SPECIFICATIONS, IDEAS, DESIGNS AND ARRANGEMENTS REPRESENTED WITHIN THESE DOCUMENTS SHALL REMAIN THE PROPERTY OF THE ENGINEER. NO PART THEREOF SHALL BE COPIED, DISCLOSED TO OTHERS OR USED IN CONNECTION WITH ANY WORK OR PROJECT OTHER THAN THE SPECIFIC PROJECT FOR WHICH THEY HAVE BEEN PREPARED AND DEVELOPED WITHOUT THE EXPRESSED WRITTEN CONSENT OF THE ENGINEER. COPYRIGHT 1998.

LAMPMAN & SMITH
STRUCTURAL ENGINEERING CORPORATION
225 PRADO ROAD, SUITE G
SAN LUIS OBISPO, CA 93401
PHONE: (805) 544-9173
FAX: (805)-543-2830

GENERAL STRUCTURAL NOTES

Utility/Pedistrain Bridge
For:
Arbor's San Luis Limited Partnership
Prepared for: Central Coast Fabrication

DATE	9/22/98
SCALE	NONE
DRAWN	L&S
JOB	LS98186
SHEET	S-1

OF 24 SHEETS

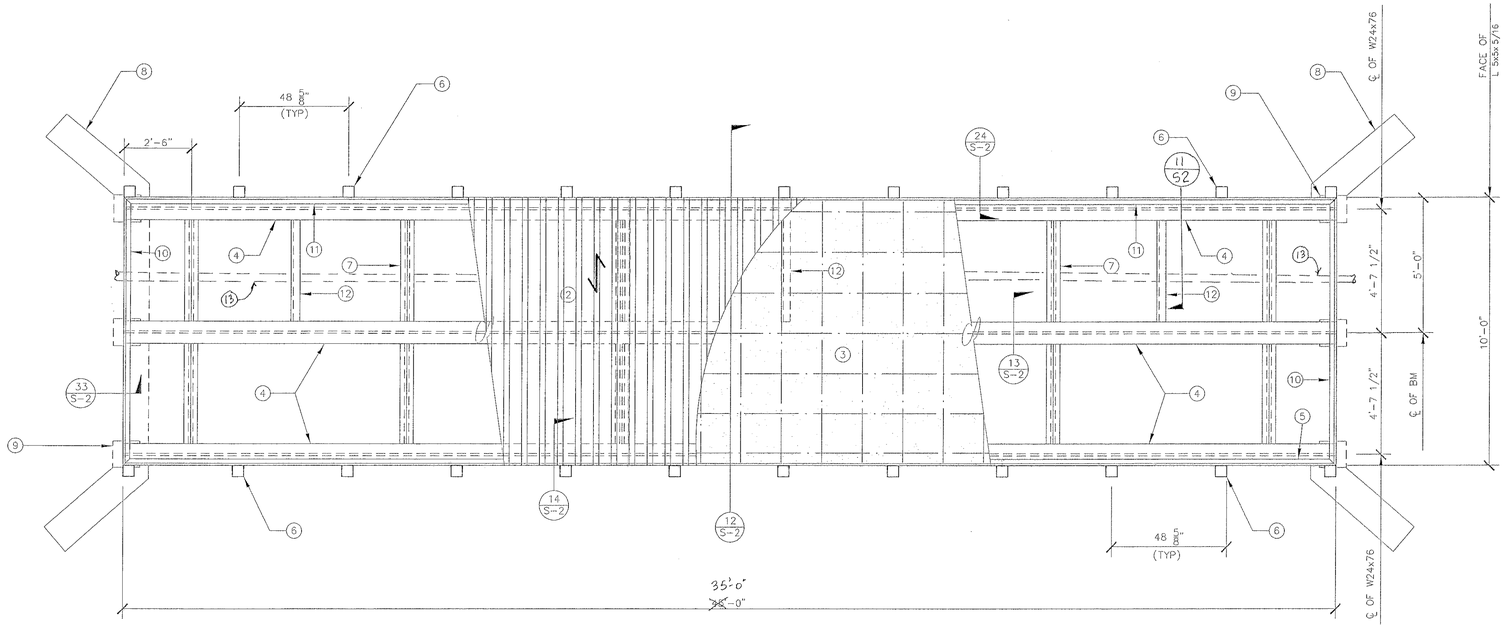

BRIDGE PLAN

N.T.S.

22

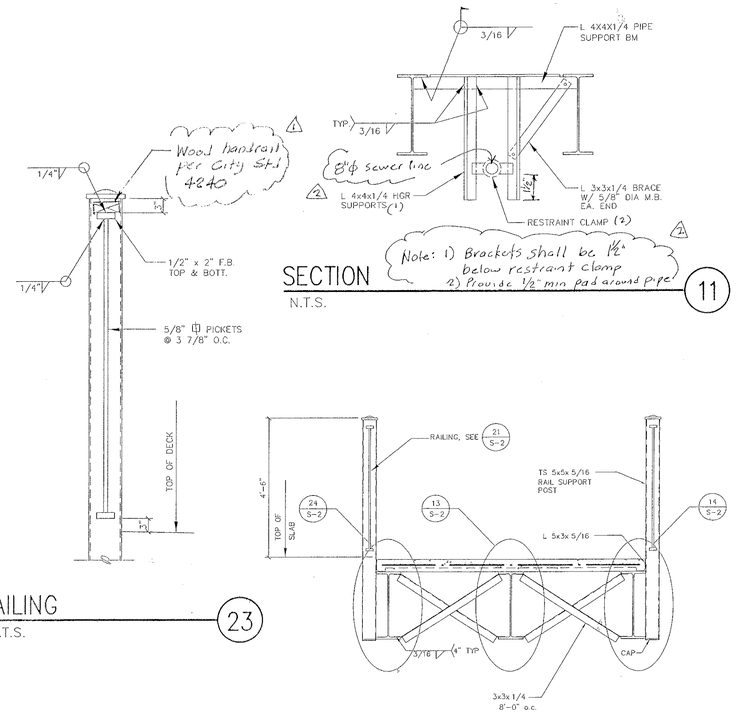

RAILING

N.T.S.

23

SECTION

N.T.S.

11

SECTION

N.T.S.

12

GENERAL NOTES

1. All work shall conform to: (A) the minimum standards of the 1994 Uniform Building Code and all related documents that are published by the I.C.B.O. which have been adopted by the local governing agency: (B) all regulations and ordinances of all governing agencies; and (C) any special conditions required by the local governing agencies.
2. A certificate of construction compliance, signed by the General Contractor based upon his observation of the construction work shall be submitted to the inspecting Building Official prior to issuance of a certificate of completion.
3. Holdowns, anchor bolts, tiedown anchors, foundation straps, etc. shall be in place held by templates or wire ties, prior to concrete inspection.
4. Contractor shall coordinate and verify with bridge truss manufacturer the location of all required hardware, embedded items, etc. prior to pouring concrete for abutments.
5. Contractor shall coordinate with the owner for the selection of fencing to be supported on abutment walls (optional).
   A. Contractor shall submit shop drawings and proposed layout of all fence supports, embedded items, etc. to Engineer for approval prior to pouring concrete.
6. Design stresses are in accordance with AISC manual of Steel Construction, allowable stress design (9th edition) and the 1994 edition of the Uniform Building Code.
7. Design loads:
   A. 100 psf uniform live load on the full deck area or one5,000 pound concentrated vehicle load.
   B. 12 psf wind load on projected height.
   C. Seismic Zone 4.
8. Special Inspection by a certified I.C.B.O. inspector shall be provided during fabrication and installation of bridge.
9. All Steel* shall be Cor Ten Self Weathering Steel conforming to ASTM A588 (F_y = 46 KSI (min)) △1
10. Durable metal sign shall be permanently affixed to the bridge stating "Maximum Load - 5000 pounds" △2

*EXCEPT FORMLOCK DECKING

REFERENCE NOTES

1. General Typical Notes.
   A. See General Structural Notes (GSN) Sheet S-1.
   B. See Civil Drawings for all Finish Grades, abutment location, utilities and site information.
   C. General Contractor shall verify all dimensions shown on these drawings with abutment drawings (by others)
2. 1-1/2" x 18" gauge Type "B" Formlok galvanized vented floor deck.
   A. Span decking shown thus
   B. Fasten decking to supports with 1/2" diameter puddle welds at each flute.
   C. Side laps shall be button punched @ 12" o.c.
3. 5" Concrete slab and metal deck.
   A. Concrete shall be regular weight (145 P.C.F.) with f'c = 3000 psi at 28 days.
   B. Reinforce slab with #4 @ 12" o.c. each way. (GR60)
   C. See Concrete Notes, Sheet S-1 for required placement and testing.
   D. See 23/S-2
4. W24x76 Floor Girder
5. L 5x3x 5/16 cont.
6. TS 5x5x 1/4 railing post.
7. L 3x3x 1/4 brace angles
   A. See 13/S-2
8. Concrete abutment/retaining wall by others.
9. 12"x1" Bearing Plate x 1'-0"
   A. See 33/S-2 & 34/S-2
10. L 5x3x5/16 closure angle
    A. Taper cut top leg for slope
11. L 4x4x1/4 cont
12. L 4x4x1/4 pipe support bm
    A. see 11/S-2
13. 8" Sewer line

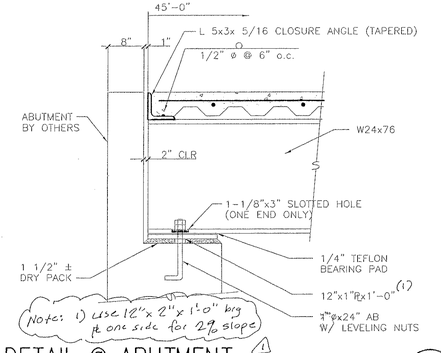

DETAIL @ ABUTMENT

N.T.S.

33

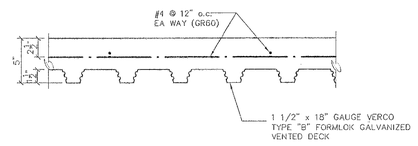

DETAIL

N.T.S.

23

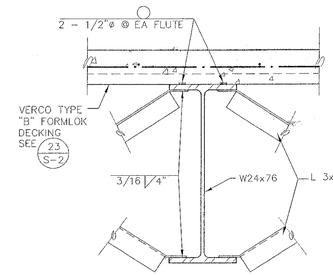

DETAIL

N.T.S.

13

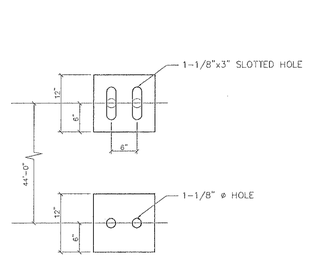

PLAN @ BRG PLATE

N.T.S.

34

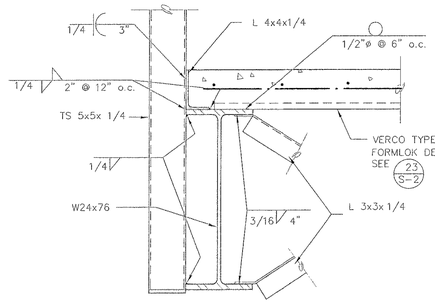

DETAIL

N.T.S.

24

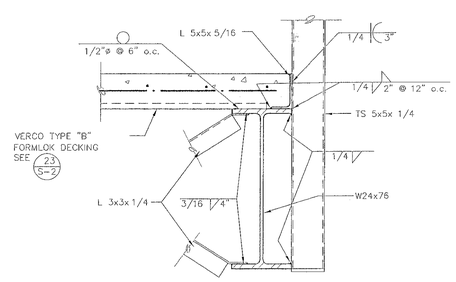

DETAIL

N.T.S.

14

APPROVED
FEB 24, 1999
ENGINEERING DIVISION

REVISIONS	BY
△1 Plan check 2-5-99	HPS
△2 Plan check 2-10-99	HPS

THESE DRAWINGS, NOTES AND DETAILS ARE INSTRUMENTS OF SERVICE AND ARE THE PROPERTY OF CAMPMAN & SMITH. ALL DRAWINGS, INFORMATION, SPECIFICATIONS, DETAILS, DESIGNS AND CALCULATIONS CONTAINED IN THESE DOCUMENTS SHALL REMAIN THE PROPERTY OF THE ENGINEER AND SHALL NOT BE USED IN WHOLE OR IN PART, DISCLOSED TO OTHERS OR USED IN CONNECTION WITH ANY WORK OR PROJECT OTHER THAN THE SPECIFIED PROJECT FOR WHICH THEY HAVE BEEN PREPARED AND DEVELOPED WITHOUT THE EXPRESSED WRITTEN CONSENT OF CAMPMAN & SMITH.
COPYRIGHT 1997.

CAMPMAN & SMITH
STRUCTURAL ENGINEERING CORPORATION
225 PRADO ROAD, SUITE G
SAN LUIS OBISPO, CA 93401
PHONE: (805) 544-9173
FAX: (805)-543-2830

3845 EXP 9-30-99 STATE OF CALIFORNIA
2-18-99

Plan & Structural Details

Utility/Pedistrain Bridge

For:
Arbor's San Luis Limited Partnership
Prepared for: Central Coast Fabrication

DATE	9/22/98
SCALE	SHOWN
DRAWN	L&S
JOB	LS98186
SHEET	S-2
OF	4 SHEETS

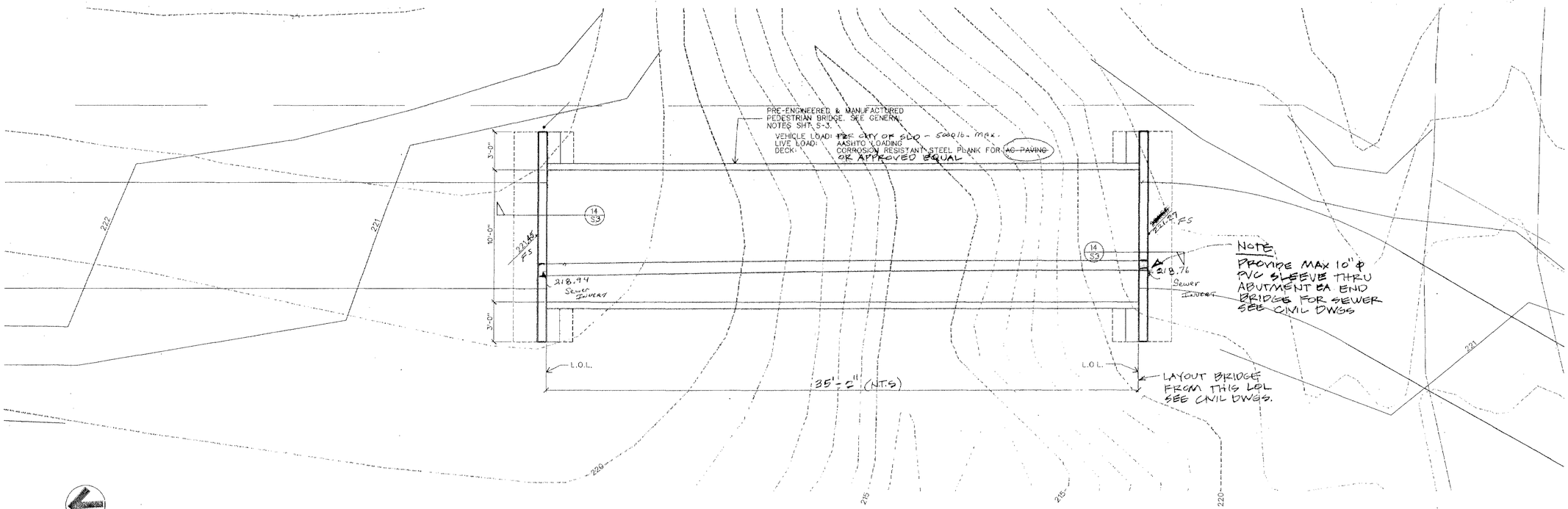

PEDESTRIAN BRIDGE PLAN

1/4"-1'-0"

NOTE:

THESE PLANS WERE REVIEWED BY GEOSOLUTIONS, LLC. THE CONCLUSIONS AND RECOMMENDATIONS FROM THEIR REVIEW ARE PRESENTED IN TWO LETTERS DATED 12/10/98 AND 12/21/98. FOUNDATION EXCAVATIONS SHALL CONFORM TO THE RECOMMENDATIONS SHOWN IN THOSE LETTERS AS WELL AS THE REQUIREMENTS OF THE SOILS INVESTIGATION REPORT NOTED ON SHEET S3

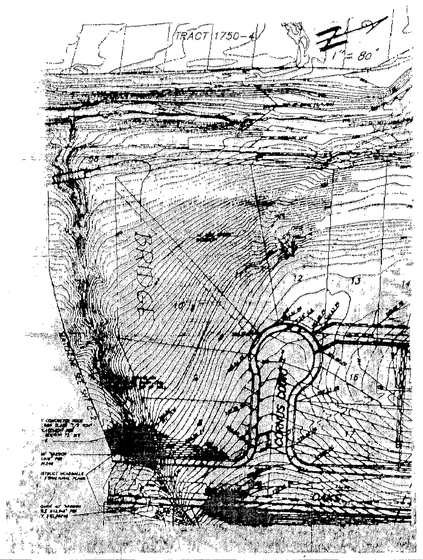

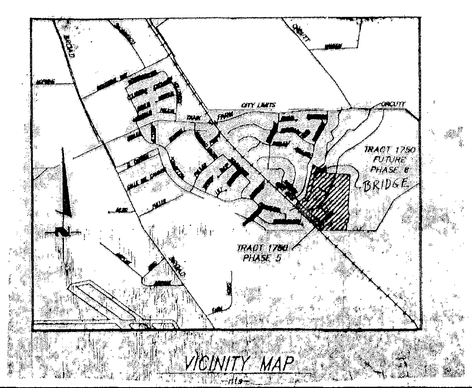

VICINITY MAP

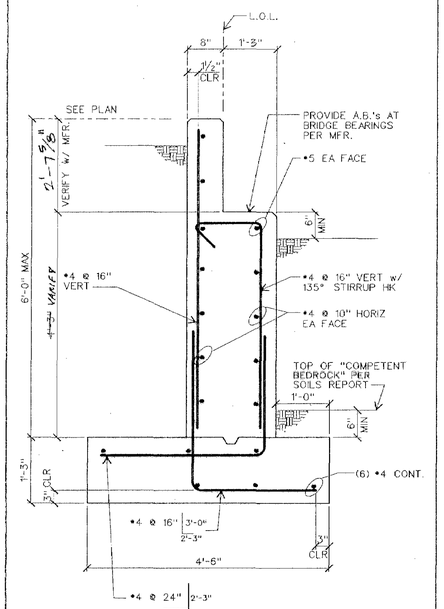

14 **C.I.P. ABUTMENT WALL**
807detail
3/4"-1'-0"

APPROVED
FEB 24, 1999
ENGINEERING DIVISION
CITY OF SAN LUIS OBISPO

REGISTERED PROFESSIONAL ENGINEER
KEVIN T. DEVANEY
NO. 38053
Exp. 3-31-01
CIVIL
STATE OF CALIFORNIA

REVISIONS

NO.	DATE:

TRACT 1750 PHASE IV
BICYCLE PATH PEDESTRIAN BRIDGES

BRIDGE NO. 2 PLAN & DETAILS

THESE DRAWINGS AND THE DESIGN REPRESENTED THEREBY, ARE THE PROPERTY OF THE DEVANEY COMPANY, AND NO PART SHALL BE COPIED OR USED IN CONNECTION WITH ANY OTHER PROJECT WITHOUT THE WRITTEN CONSENT OF THE DEVANEY COMPANY

THE DEVANEY COMPANY
CONSULTING ENGINEERS
1390 SAWLEAF COURT SAN LUIS OBISPO, CA 93401
(805) 434-2219

DATE: 7 MAY 98
DRAWN BY: GDW
CHECKED BY: K.T.D.
PROJECT NO.: 9807

SHEET NO.
S-3
OF 4

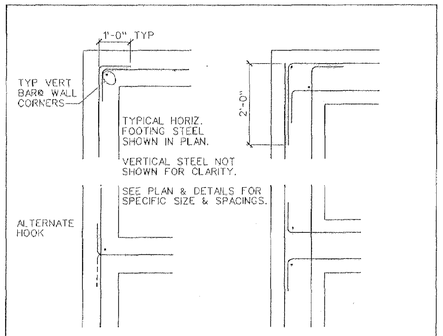

32	TYPICAL CONCRETE CORNER REINFORCING	3/4"=1'-0" 1.01.14 FOUNDATION

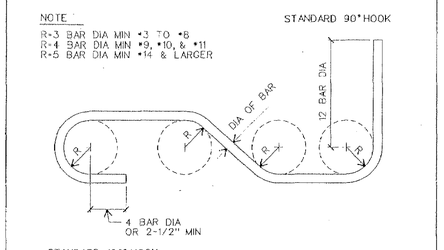

33	TYPICAL PRINCIPAL REINFORCING	NO SCALE 1.01.15 FOUNDATION

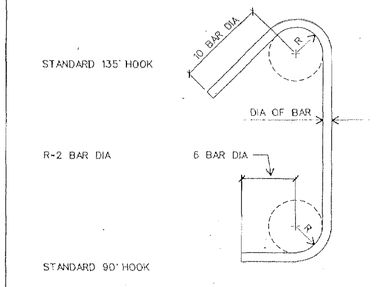

34	TYPICAL STIRRUP & HOOP REINFORCING	NO SCALE 1.01.15 FOUNDATION

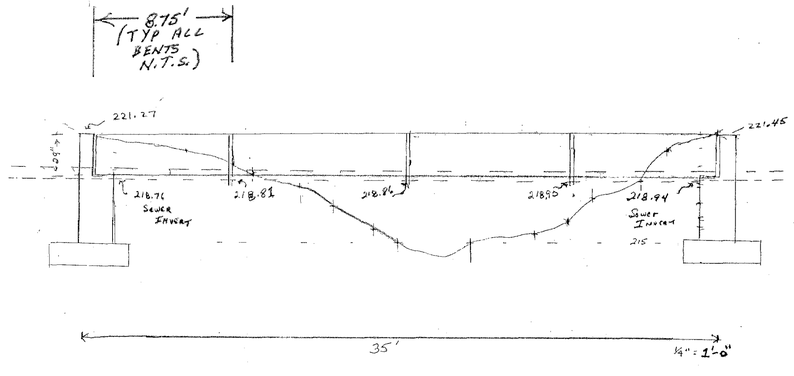

BRIDGE PROFILE

GENERAL STRUCTURAL NOTES

GENERAL

1. The Contractor shall verify all dimensions and conditions at the job site prior to starting construction. Notify the Engineer immediately if any discrepancies or inconsistencies are found.
2. Details shown on the structural drawings are typical. Similar details apply to similar conditions. In the event certain aspects of the work are not fully detailed on the drawings or specified in these structural notes, the construction shall be of the same character as for similar conditions that are shown or specified and shall be reviewed by the Engineer.
3. Existing conditions shown on these drawings are to be field verified by the Contractor as the work progresses. Notify the Engineer immediately if existing conditions are discovered which are different than those shown. Construction shall not proceed until written instructions have been received from the Engineer.
4. Notes and details on the drawings shall take precedence over these general notes and typical details. Dimensions shown on the drawings shall take precedence over scale.
5. These structural drawings and general notes represent the finished structure. Unless otherwise indicated, they do not specify the method of construction. The Contractor shall provide all measures necessary to protect the structure, workmen and other persons during construction. Such measures shall include, but not be limited to, bracing of sufficient strength and stiffness to resist all loads, including wind and seismic loads, imposed on all elements of the structure; shoring for construction equipment; earth banks and retaining walls; forms, scaffolding and planking. These protective measures are the sole responsibility of the Contractor and site visits by the Engineer shall not include observation of same.
6. Openings, pockets, etc. shall not be placed in foundations, walls, etc. unless specifically detailed on the structural drawings.
7. All phases of the work shall conform to the minimum standards of the 1994 Uniform Building Code (U.B.C.), these structural notes, and all local ordinances.
8. All ASTM specifications noted on these drawings or general notes shall be of the latest revision.
9. Special inspection in accordance with Section 306 of the U.B.C. shall be provided by a qualified person who is acceptable to the Engineer and Building Department for the following types of work:
   a. Concrete placing.
   b. Reinforcing steel placing.
10. The contractor shall contact the Engineer a minimum of 24 hours prior to reaching the following phases of the work.
    a. Placing of concrete.
    b. All structural work completed.

FOUNDATION

1. Foundation design based on soil investigation by Terratech, Inc.
   Report No. 301164, dated February 1997

   The design shown hereon is based on the following parameters:

   a. Active equivalent fluid pressure: 50 pcf + 1 pcf for each degree of slope inclination where the retained surface slopes upward from the wall
   b. Passive equivalent fluid pressure: 400 psf (in bedrock)
   c. Coefficient of sliding friction: 0.4 (in bedrock)
   d. Maximum toe pressure: 3000 psf (in bedrock)

   The project Soils Engineer shall review these drawings and design parameters and provide a letter stating that the design shown hereon is in conformance with the findings, conclusions and recommendations of the above referenced soils investigation and Soils Engineering Report prior to construction
2. Allowable soil bearing values and foundation design are based on soil conditions shown by test borings. Actual soil conditions which deviate appreciably from that shown in the test borings or buried structures found during earthwork operations shall be reported to the Engineer immediately.
3. All site work and grading shall be done in accordance with the Soils Engineering Report.
4. Excavations for foundations shall conform to the lines and dimensions shown on the drawings. Remove all loose material and debris from excavations and de-water excavations as required to maintain dry working conditions. The Soils Engineer shall approve all site work and foundation excavations prior to installing reinforcing steel or placing concrete.
5. The Soils Engineer shall approve all backfill materials prior to placement and observe backfill operations.
6. The bottom of all footings shall be horizontal. Where adjoining footings bear at different elevations the bottom of the footings shall be stepped as detailed on the drawings.

PEDESTRIAN BRIDGES

1. Design: The bridges shall be rectangular tube truss type with one diagonal per panel fabricated from atmospheric corrosion resistant steel. The design shall be in accordance with the "Specifications for Highway Bridges" of the American Association of State Highway and Transportation Officials (AASHTO) and the "Specification for the Design, Fabrication and Erection of Structural Steel for Buildings" by the American Institute of Steel Construction (AISC). The bridges shall be designed to resist all dead loads together with the live loads shown on the drawings. Each bridge shall be designed and fabricated as one unit with no field splices.
2. Railings: The railing height shall be 42" above the finish surface of the bridge deck with a maximum rail opening of 4".
3. Material: The bridges shall be fabricated from high strength, self weathering, low alloy atmospheric corrosion resistant ASTM A847 cold formed welded square and rectangular tubing and ASTM A588 plate and structural shapes. All truss members shall be tubular shapes.
4. Welding: In accordance with the American Welding Society Specifications, AWS D1.1.
5. Camber: The bridge shall be fabricated with camber for full dead plus live load deflection.
6. Cleaning: After fabrication all structural steel shall be blast cleaned in accordance with the latest edition of the Steel Structures Painting Council Surface Preparation Specifications No. 6, Commercial Blast Cleaning, SSPC-SP6.
7. Shop Drawings: The manufacturer shall submit 6 sets of complete shop drawings and engineering calculations stamped and signed by a licensed Civil Engineer currently registered in the State of California. Shop drawings and calculations shall include anchor bolt size, spacing, location and placement; bearing and slip plate details; complete vertical and horizontal abutment reaction, stress, deflection and camber calculations.

CONCRETE

1. All concrete work shall be performed in accordance with the latest edition of the ACI Building Code (ACI 318) and the latest edition of the ACI Manuals of Concrete Practice.
2. Submit concrete mix designs to Engineer for review. Mix designs shall be prepared under the supervision of a Civil Engineer registered in the State of California and bear his signature.
3. Concrete strength: 3000 psi @ 28 days.
4. Minimum cement content: 5.3 sacks per yard.
5. Maximum water-cement ratio: 7 gal. per sack.
6. Aggregate size: 1". Provide the maximum ratio of coarse aggregate to fine aggregate consistent with placing requirements, minimum 60% coarse aggregate
7. Maximum slump: 4-1/2" per ASTM C143.
8. Concrete materials:
   a. Cement: Portland Type II, ASTM C150.
   b. Coarse aggregate: ASTM C33.
   c. Fine aggregate: ASTM C33. Reactivity ratio Sc/Rc shall not exceed one (1) per ASTM C289.
   d. Water: potable.
   e. Ready mixed concrete: ASTM C94.
   f. Water reducing admixture: Polyheed at the maximum dosage recommended by the manufacturer. When the average daily temperature is below 55 degrees F, use Pozzolith 322N at the rate of 7 oz. per sack.
   g. Air entraining admixture: MBVR or Darex of strength required to provide between 3-1/2% and 5% of entrained air.
9. Reinforcing materials:
   a. #3 bars and smaller: ASTM A615 Grade 40 or Grade 60.
   b. #4 bars and larger: ASTM A615 Grade 60.
10. Miscellaneous materials:
    a. Non shrink grout and/or drypack: MinWax Por-Rok or approved equal. Mix with the minimum amount of water required to obtain the consistency necessitated by placing conditions.
    b. Curing compounds: Water based liquid membranes conforming to ASTM C309 when tested in accordance with ASTM C156: Euco Aqua-Cure or approved equal.
    c. Expansion joint material: Conform to ASTM D-1751.
11. Welding of reinforcing steel: Reinforcing steel shall not be welded unless specifically detailed on the drawings or directed by the Engineer. All welding of reinforcing steel shall be in accordance with the latest edition of "Recommended Practice for Welding Reinforcing Steel, Metal Inserts, and Connections in Reinforced Concrete Construction" by the AWS (AWS D1.4). Use low hydrogen E80xx or E90xx electrodes for welding of reinforcing steel.
12. Lap splices: 40 bar diameters or 1'-6", whichever is greater.
13. Cover to bars:
    a. When concrete is placed against ground: 3".
    b. When concrete is placed against forms but after form removal will be in contact with ground or weather:
       #5 bars and smaller: 1-1/2"
       #6 bars and larger: 2"
    c. All others: 1-1/2".
14. Concrete curing: Keep concrete continuously wet for 7 days or apply curing compound in strict accordance with manufactur. s printed instructions.
15. Form removal: Remove forms in accordance with the following schedule:
    a. Side forms of footings: Minimum 2 days.
    b. Walls: Minimum 10 days.
16. Vibration: Vibrate all concrete in place with a mechanical vibrator used by experienced personnel.
17. Shop drawings: Submit to the Engineer for review. No reinforcing shall be placed until reviewed shop drawings have been received on the job. Shop drawings shall consist of both cut and placing sheets. Placing sheets shall contain all information required to position all reinforcing steel without having to refer to the structural drawings.
18. Projecting corners of walls shall be formed with a 3/4" chamfer unless detailed otherwise.
19. Testing:
    a. Laboratory: The Owner shall retain and pay for the services of a Testing Laboratory where samples will be tested in accordance with these structural notes and the applicable standards of the ASTM. Work under this division (to be performed by the Contractor) includes the taking and storage of samples and their delivery to the laboratory.
    b. Samples: Make 3 test cylinders for each day's pour.
    c. Testing of samples: Test each batch of 3 cylinders as follows: 1 at 7 days, and 2 at 28 days.
    d. Test reports: A copy of all test reports shall be submitted to the Engineer.

APPROVED
FEB 24, 1999
ENGINEERING DIVISION
CITY OF SAN LUIS OBISPO

REGISTERED PROFESSIONAL ENGINEER
KEVIN T. DEVANEY
NO. 38953
Exp. 3-31-01
CIVIL
STATE OF CALIFORNIA

REVISIONS

NO.	DATE:

TRACT 1750 PHASE IV
BICYCLE PATH PEDESTRIAN BRIDGES

GENERAL NOTES & TYPICAL DETAILS

THESE DRAWINGS AND THE DESIGN REPRESENTED THEREBY ARE THE PROPERTY OF THE DEVANEY COMPANY AND NO PART SHALL BE COPIED OR USED IN CONNECTION WITH ANY OTHER PROJECT WITHOUT THE WRITTEN CONSENT OF THE DEVANEY COMPANY

THE DEVANEY COMPANY
CONSULTING ENGINEERS
1330 GAMLEAF COURT SAN LUIS OBISPO, CA 93401
(805) 434-2219

DATE: 7 MAY 98
DRAWN BY: GDW
CHECKED BY: K.T.D.
PROJECT NO.: 9907

SHEET NO.
S-4
OF 4