DIST	COUNTY	ROUTE	POST MILES TOTAL PROJECT	SHEET NO.	TOTAL SHEETS
5	SLO		–	1	41

Ronald L. Rivett
REGISTERED CIVIL ENGINEER

4/5/00
PLANS APPROVAL DATE

REGISTERED PROFESSIONAL ENGINEER Ronald L. Rivett No. 31,269 EXP. 12/31/00 CIVIL STATE OF CALIFORNIA

MARTIN & KANE, INC.
2200-B DOUGLAS BLVD, #150
ROSEVILLE • CA 95661

CITY OF SAN LUIS OBISPO

PROJECT PLANS FOR CONSTRUCTION OF

HIGUERA STREET BRIDGE REPLACEMENT

STATE BRIDGE NO. 49C0408

NOTE: THE CONTRACTOR IS REQUIRED TO POSSESS A GENERAL ENGINEERING CONTRACTOR LICENSE AT THE TIME THIS CONTRACT IS AWARDED

May, 2000

FEDERAL PROJECT No. BHLS 5016(009)

INDEX OF SHEETS

ROADWAY PLANS

SHEET NO.	TITLE
1.	TITLE SHEET
2.	ROADWAY TYPICAL SECTION
3.	ROADWAY LAYOUT (1)
4.	ROADWAY LAYOUT (2)
5.	UTILITY PLAN NO. 1
6.	UTILITY PLAN NO. 2
7.	SEWER LINE
8.	STREET RESURFACING PLAN 1
9.	STREET RESURFACING PLAN 2
10.	LOT 6 STRIPING
11.	LOT 6 EARTHWORK
12.	TEMPORARY PARKING LOT CIRCULATION PLAN
13.	TRAFFIC SIGNAL AND LIGHTING PLAN
14.	SIGNING & STRIPING PLAN NO. 1
15.	SIGNING & STRIPING PLAN NO. 2
16.	TRAFFIC DETOUR PLAN
17.	TRAFFIC DETOUR PLAN
18.	TRAFFIC DETOUR PLAN
19.	TRAFFIC STAGING PLAN NO. 1
20.	TRAFFIC STAGING PLAN NO. 2

BRIDGE PLANS

SHEET NO.	TITLE
21.	GENERAL PLAN NO. 1
22.	GENERAL PLAN NO. 2
23.	GENERAL PLAN NO. 3
24.	CONSTRUCTION STAGING DETAILS NO. 1
25.	CONSTRUCTION STAGING DETAILS NO. 2
26.	CONSTRUCTION STAGING DETAILS NO. 3
27.	VOID LOCATION PLAN
28.	EXISTING GIRDER LAYOUT AND TIEDOWN ANCHOR LOCATIONS
29.	TEMPORARY SUPPORT DETAILS
30.	ABUTMENT DETAILS NO. 1
31.	ABUTMENT DETAILS NO. 2
32.	PRECAST CONCRETE SLAB LAYOUT
33.	PRECAST CONCRETE SLAB AND CAST-IN-PLACE CONCRETE SLAB LAYOUT
34.	SLAB DETAILS NO. 1
35.	SLAB DETAILS NO. 2
36.	SLAB DETAILS NO. 3
37.	SLAB DETAILS NO. 4
38.	PRECAST CONCRETE SLAB DETAILS
39.	CONSTRUCTION DETAILS
40.	UTILITY DETAILS NO. 1
41.	UTILITY DETAILS NO. 2

LEGEND

- TREE
- SEWER MANHOLE
- PG&E MANHOLE
- WATER VALVE
- WATER METER
- FIRE HYDRANT
- AS NOTED
- PARKING METER
- SIGN
- STREET LIGHT
- TRAFFIC SIGNAL
- BRIDGE FOUNDATION WALL
- CURB FACE INLET

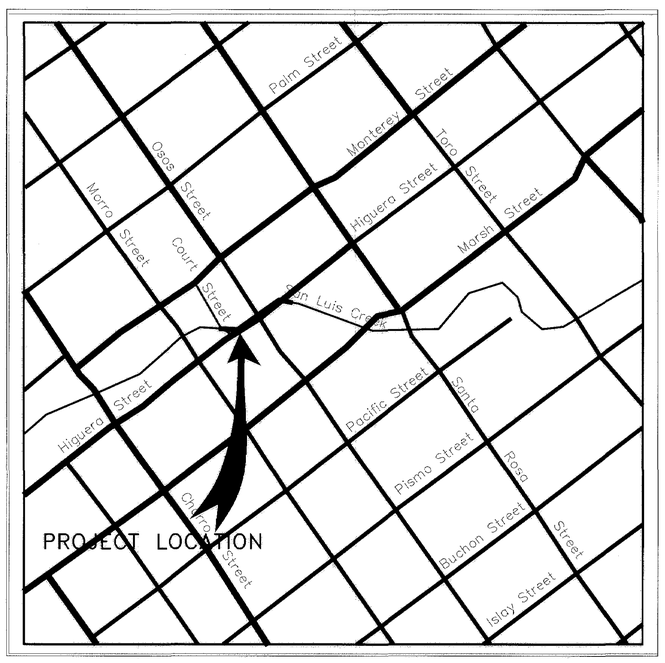

SITE MAP

LOCATION MAP

All dimensions are in meters unless otherwise specified.

N:\MKSRVR\MK PROJECTS\1997\97017-HIGUERA STREET BRIDGE REHAB\DRAWINGS\100% Submittal\97017-TTL.DWG 3-17-00

CITY OF SAN LUIS OBISPO

HIGUERA STREET BRIDGE REPLACEMENT

APPROVED: REGISTERED PROFESSIONAL ENGINEER WAYNE A. PETERSON No. 18593 Exp 6/30/01 CIVIL STATE OF CALIFORNIA
CITY ENGINEER

DATE	3/2000
SCALE	
DESIGNED BY	R.F.
DRAWN BY	R.D., K.W.
CHECKED BY	R.R.
APPROVED BY UTILITIES DEPARTMENT	

TITLE SHEET

SPECIFICATION NO. 9367
FILE NO./LOCATION 0060 B
SHEET 1 OF 41

DIST	COUNTY	ROUTE	POST MILES TOTAL PROJECT	SHEET NO.	TOTAL SHEETS
5	SLO		–	2	41

Ronald L. Rivett
REGISTERED CIVIL ENGINEER

4/5/00
PLANS APPROVAL DATE

REGISTERED PROFESSIONAL ENGINEER
Ronald L. Rivett
No. 31,269
EXP. 12/31/00
CIVIL
STATE OF CALIFORNIA

MARTIN & KANE, Inc.
2200-B DOUGLAS BLVD, #150
ROSEVILLE • CA 95661

CALTRANS STANDARD PLANS DATED JULY 1999

A10A ABBREVIATIONS
A10B SYMBOLS
A20A PAVEMENT MARKERS AND TRAFFIC LINES TYPICAL DETAILS
A20D PAVEMENT MARKERS AND TRAFFIC LINES TYPICAL DETAILS
A24A PAVEMENT MARKINGS ARROWS
A24E PAVEMENT MARKINGS WORDS AND CROSSWALKS
A62C LIMITS OF PAYMENT FOR EXCAVATION AND BACKFILL BRIDGE

T3 TEMPORARY RAILING (TYPE K)

BD-1 BRIDGE DETAILS
BD-5 BRIDGE DETAILS

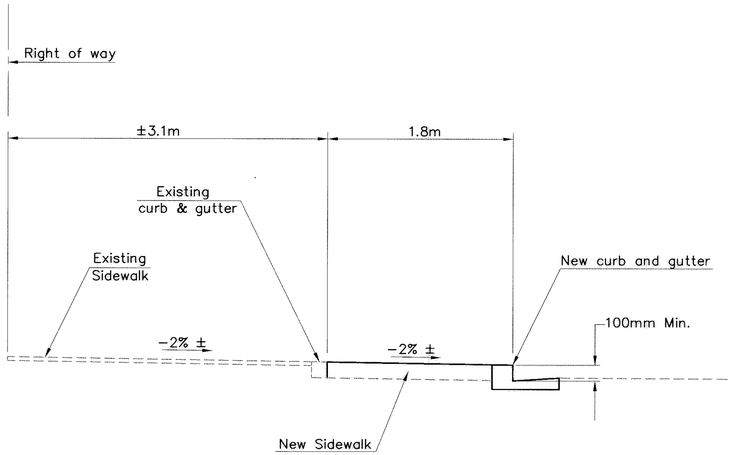

Notes:
1) Conform to existing conditions & grades.
2) Gradients are approximate.
3) Curb hieght is 100mm minimum.

SECTION THRU SIDEWALK BULBOUT

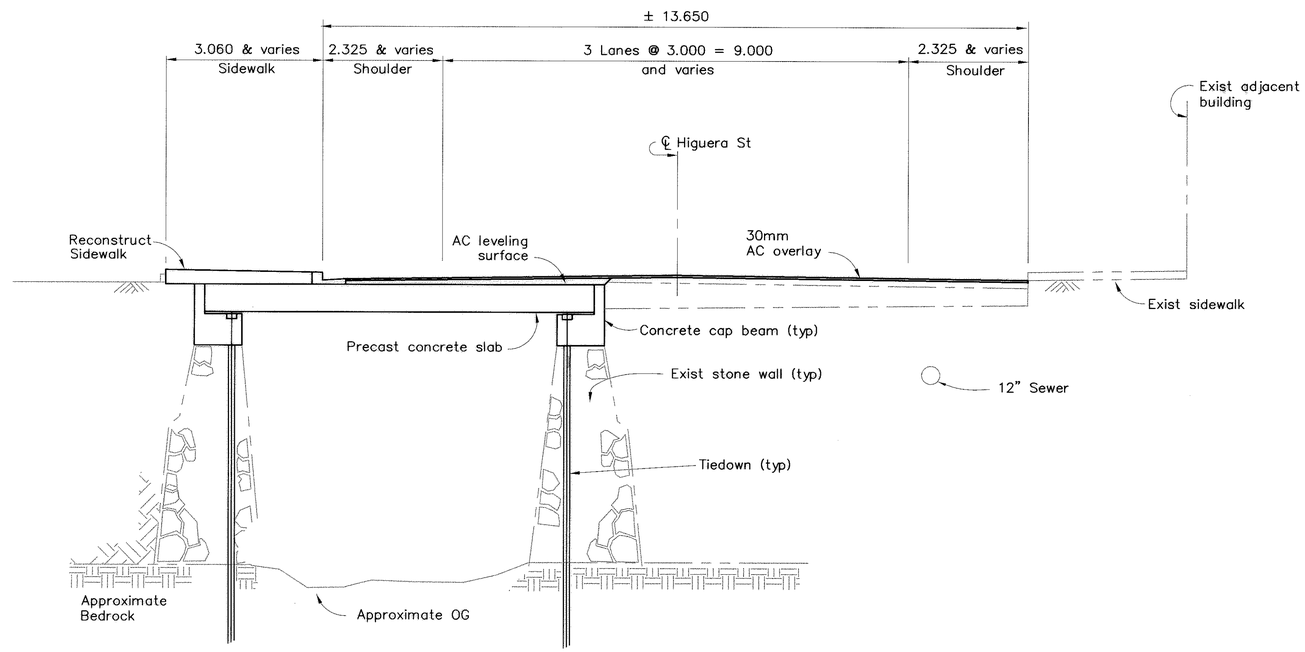

TYPICAL SECTION 0+58.43 to 1+44.80

1:50

All dimensions are in meters unless otherwise noted.

CITY OF SAN LUIS OBISPO

HIGUERA STREET BRIDGE REPLACEMENT

FOR REDUCED PLANS ORIGINAL SCALE IS IN MILLIMETERS 0 20 40 60 80 100

APPROVED BY
CITY ENGINEER

DATE	3/2000
SCALE	AS SHOWN
DESIGNED BY	R.F.
DRAWN BY	R.D., K.W.
CHECKED BY	R.R.
APPROVED BY UTILITIES DEPARTMENT	

ROADWAY TYPICAL SECTION

SPECIFICATION NO. 9367
FILE NO./LOCATION 0060 3
SHEET 2 OF 41

DIST	COUNTY	ROUTE	POST MILES TOTAL PROJECT	SHEET NO.	TOTAL SHEETS
5	SLO		-	3	41

REGISTERED CIVIL ENGINEER

4/5/00
PLANS APPROVAL DATE

REGISTERED PROFESSIONAL ENGINEER
Ronald L. Rivett
No. 31,269
EXP. 12/31/00
CIVIL
STATE OF CALIFORNIA

MARTIN & KANE, INC.
2200-B DOUGLAS BLVD, #150
ROSEVILLE • CA 95661

● Survey Control Points				
Point Number	Elevation	Description	Coordinates	
			North	East
512	65.58	SET PKNAIL	700776.2383	1757984.7870
600	66.14	FD L&T RLS 3877	700796.8080	1757930.5720
602	65.37	FD L&T RCE 6923	700787.9310	1757896.6390

For other control points see Engineer.

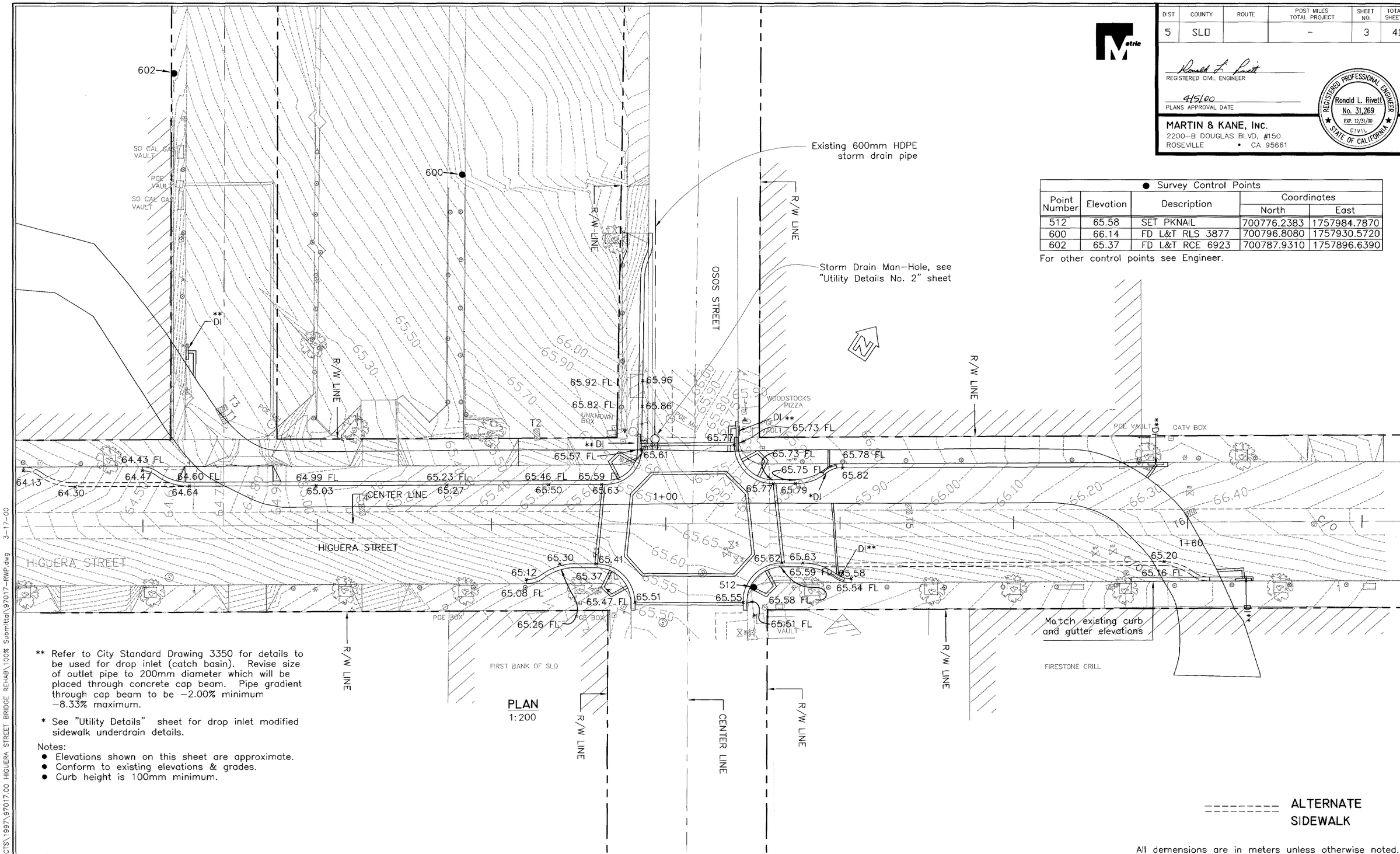

** Refer to City Standard Drawing 3350 for details to be used for drop inlet (catch basin). Revise size of outlet pipe to 200mm diameter which will be placed through concrete cap beam. Pipe gradient through cap beam to be −2.00% minimum −8.33% maximum.

* See "Utility Details" sheet for drop inlet modified sidewalk underdrain details.

Notes:
- Elevations shown on this sheet are approximate.
- Conform to existing elevations & grades.
- Curb height is 100mm minimum.

All demensions are in meters unless otherwise noted.

City of San Luis Obispo

HIGUERA STREET BRIDGE REPLACEMENT

FOR REDUCED PLANS ORIGINAL SCALE IS IN MILLIMETERS 0 20 40 60 80 100

APPROVED BY

CITY ENGINEER

DATE	3/2000
SCALE	As Shown
DESIGNED BY	R.C.
DRAWN BY	K.B.
CHECKED BY	A.O.
APPROVED BY	
UTILITIES DEPARTMENT	

ROADWAY LAYOUT (1)

SPECIFICATION NO. 9367

FILE NO./LOCATION 0060 B

SHEET 3 OF 41

N:\MKSRVR1\MK PROJECTS\1997\97017.00 HIGUERA STREET BRIDGE REHAB\100% Submittal\97017-RWP.dwg J-17-00

DIST	COUNTY	ROUTE	POST MILES TOTAL PROJECT	SHEET NO.	TOTAL SHEETS
5	SLO		-	3	41

REGISTERED CIVIL ENGINEER

PLANS APPROVAL DATE

REGISTERED PROFESSIONAL ENGINEER Ronald L. Rivett No. 31,269 EXP. 12/31/00 CIVIL STATE OF CALIFORNIA

MARTIN & KANE, INC.
2200-B DOUGLAS BLVD, #150
ROSEVILLE • CA 95661

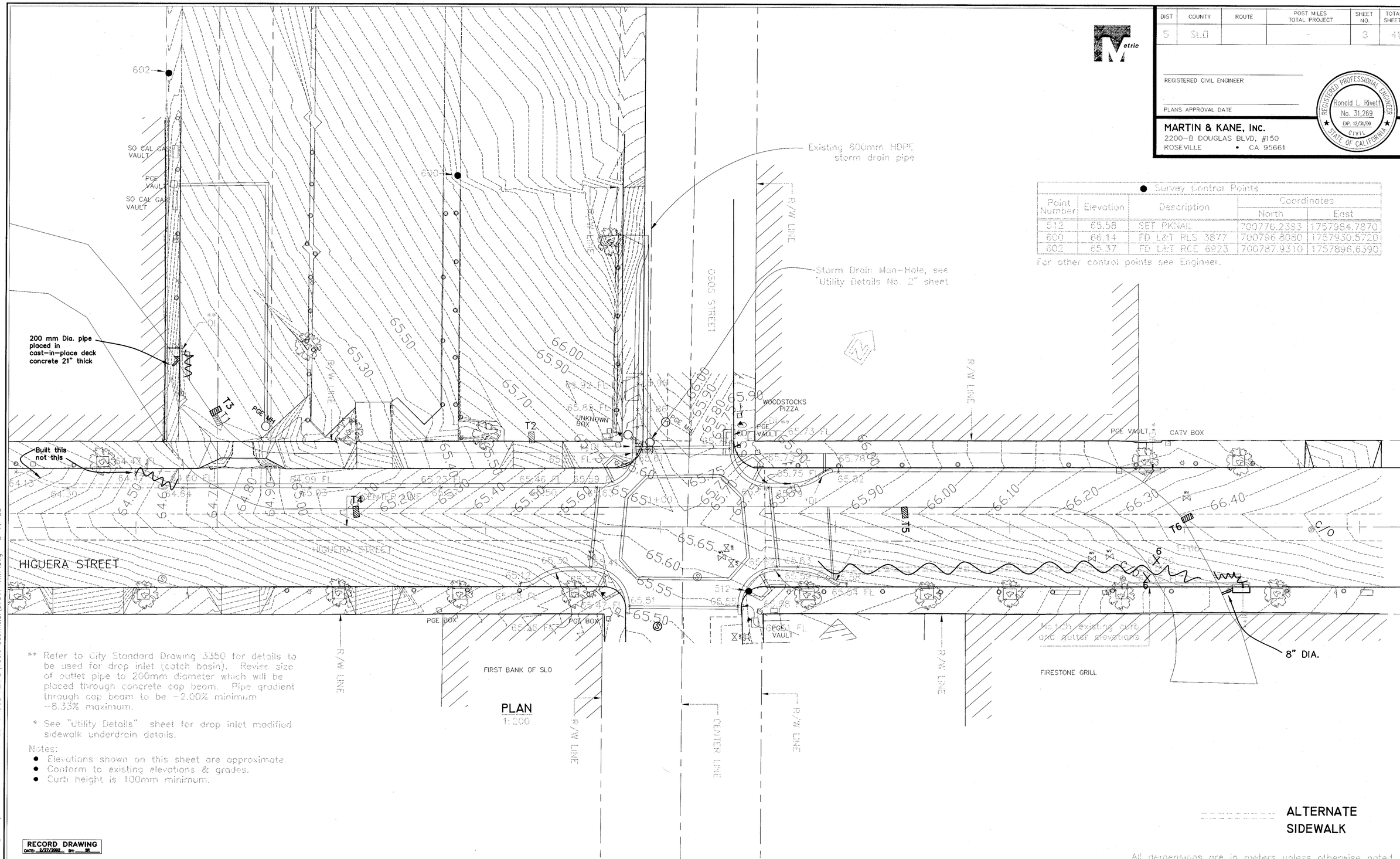

● Survey Control Points

Point Number	Elevation	Description	Coordinates North	Coordinates East
512	65.58	SET PKNAIL	700776.2383	1757984.7870
600	66.14	FD L&T RLS 3877	700796.8080	1757930.5720
602	65.37	FD L&T RCE 6923	700787.9310	1757896.6390

For other control points see Engineer.

** Refer to City Standard Drawing 3350 for details to be used for drop inlet (catch basin). Revise size of outlet pipe to 200mm diameter which will be placed through concrete cap beam. Pipe gradient through cap beam to be -2.00% minimum -8.33% maximum.

* See "Utility Details" sheet for drop inlet modified sidewalk underdrain details.

Notes:
- Elevations shown on this sheet are approximate.
- Conform to existing elevations & grades.
- Curb height is 100mm minimum.

PLAN
1:200

ALTERNATE SIDEWALK

All dimensions are in meters unless otherwise noted.

RECORD DRAWING
DATE: 3/27/2002 BY: SR

N:\MKSRVR1\MK PROJECTS\1997\97017.00 HIGUERA STREET BRIDGE REHAB\100% Submittal\97017-RWP.dwg 3-17-00

City of San Luis Obispo

HIGUERA STREET BRIDGE REPLACEMENT

FOR REDUCED PLANS ORIGINAL SCALE IS IN MILLIMETERS 0 20 40 60 80 100

APPROVED BY

CITY ENGINEER

DATE	3/2000
SCALE	As Shown
DESIGNED BY	R.C.
DRAWN BY	K.B.
CHECKED BY	A.O.
APPROVED BY	
UTILITIES DEPARTMENT	

ROADWAY LAYOUT (1)

SPECIFICATION NO. 9367

FILE NO./LOCATION 0060 B

SHEET 3R OF 41

DIST	COUNTY	ROUTE	POST MILES TOTAL PROJECT	SHEET NO.	TOTAL SHEETS
5	SLO		–	4	41

Ronald L. Rivett
REGISTERED CIVIL ENGINEER

4/5/00
PLANS APPROVAL DATE

REGISTERED PROFESSIONAL ENGINEER
Ronald L. Rivett
No. 31,269
EXP. 12/31/00
CIVIL
STATE OF CALIFORNIA

MARTIN & KANE, INC.
2200-B DOUGLAS BLVD, #150
ROSEVILLE • CA 95661

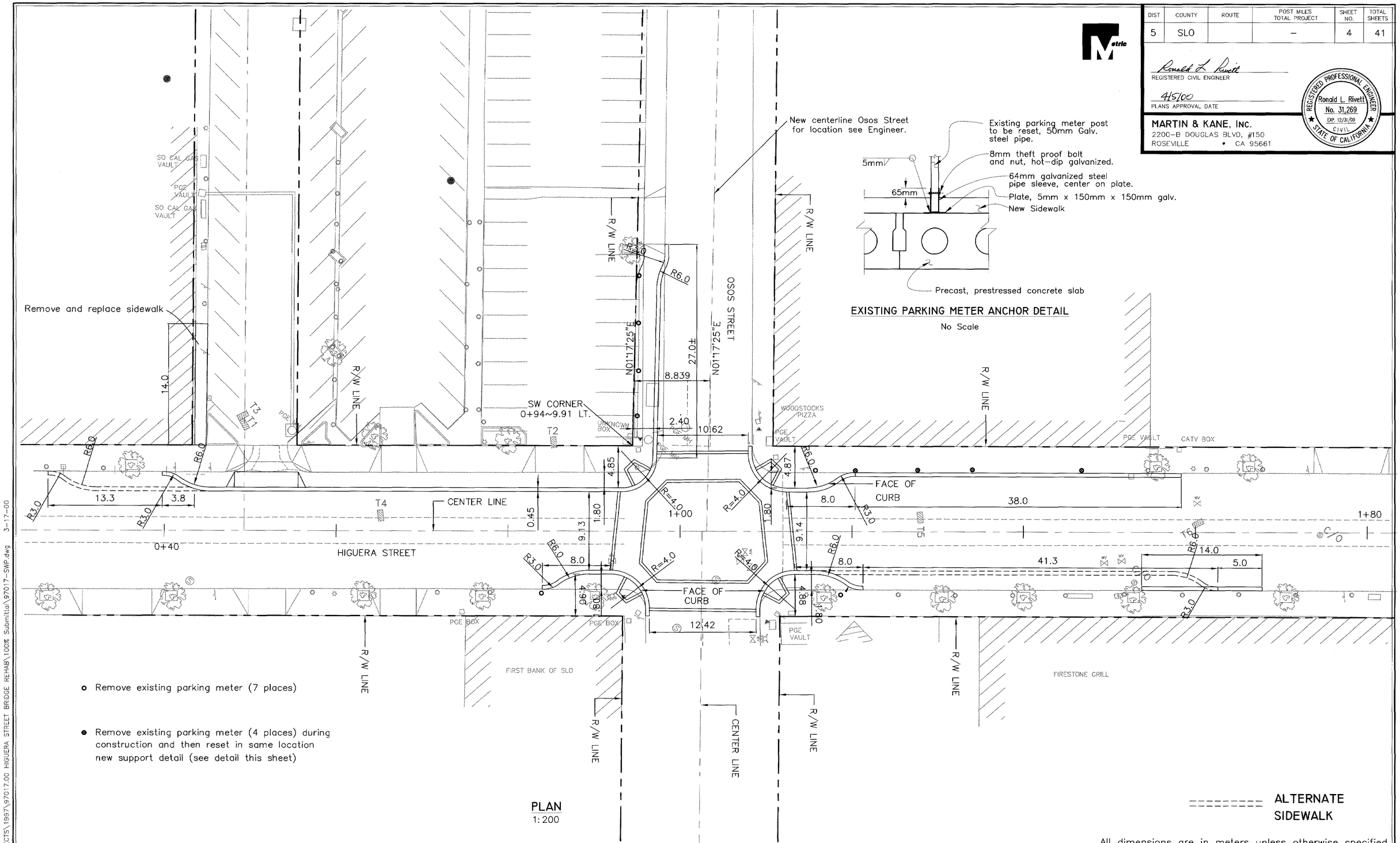

All dimensions are in meters unless otherwise specified.

N:\MKSRVR1\MK PROJECTS\1997\97017.00 HIGUERA STREET BRIDGE REHAB\100% Submittal\97017-SWP.dwg 3-17-00

CITY OF SAN LUIS OBISPO

HIGUERA STREET BRIDGE REPLACEMENT

FOR REDUCED PLANS ORIGINAL SCALE IS IN MILLIMETERS 0 20 40 60 80 100

APPROVED BY
CITY ENGINEER

DATE	3/2000
SCALE	As Shown
DESIGNED BY	R.C.
DRAWN BY	K.B.
CHECKED BY	A.O.
APPROVED BY	
UTILITIES DEPARTMENT	

ROADWAY LAYOUT (2)

SPECIFICATION NO. 9367
FILE NO./LOCATION 0060 B
SHEET 4 OF 41

DIST	COUNTY	ROUTE	POST MILES TOTAL PROJECT	SHEET NO.	TOTAL SHEETS
5	SLO		–	4	41

REGISTERED CIVIL ENGINEER

PLANS APPROVAL DATE

REGISTERED PROFESSIONAL ENGINEER Ronald L. Rivett No. 31,269 EXP. 12/31/00 CIVIL STATE OF CALIFORNIA

MARTIN & KANE, INC.
2200-B DOUGLAS BLVD. #150
ROSEVILLE • CA 95661

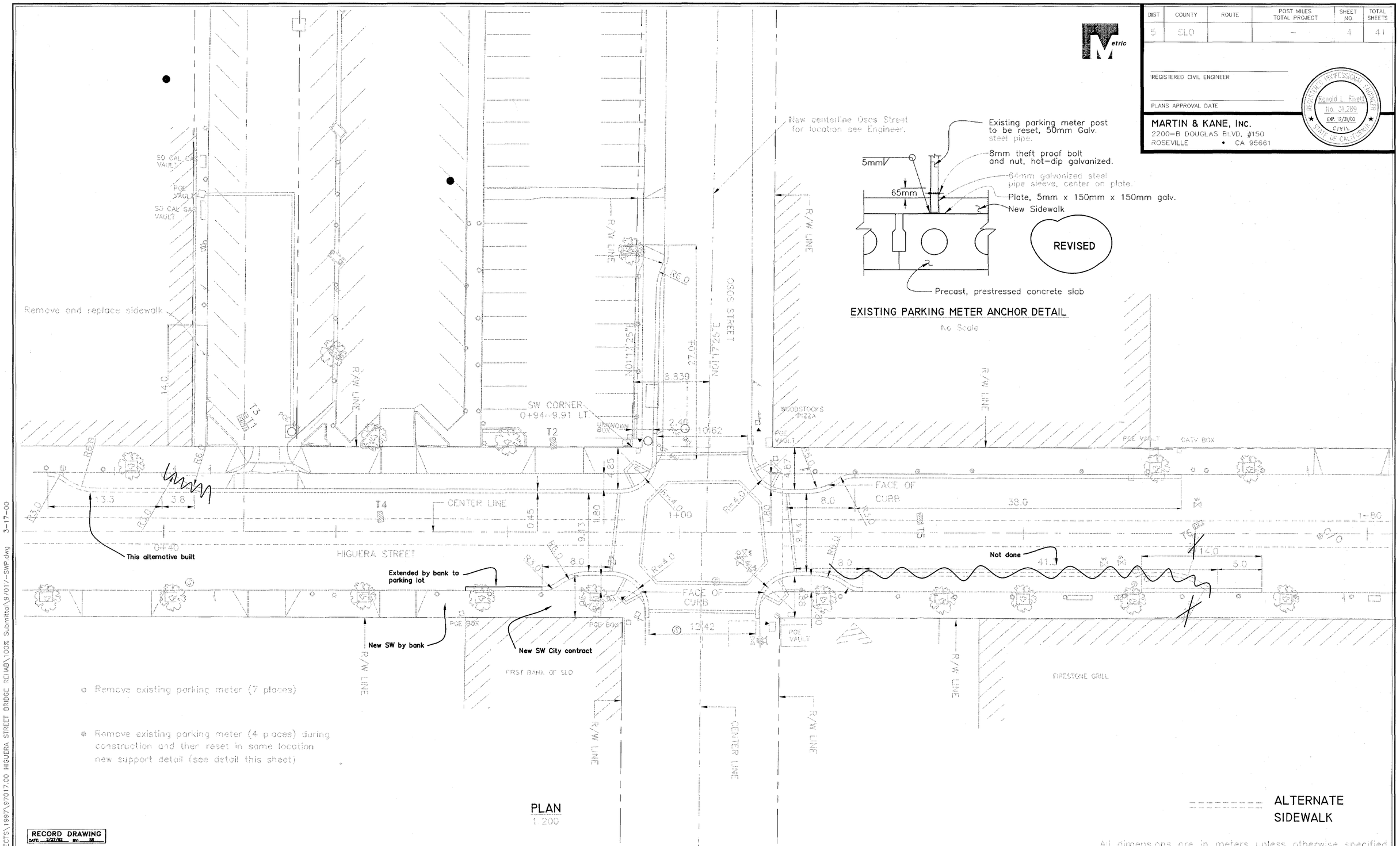

RECORD DRAWING
DATE: 2/27/02 BY: SR

N:\MKSRVR1\MK PROJECTS\1997\97017.00 HIGUERA STREET BRIDGE RELAB\100% Submittal\9/01/-SWP.dwg 3-17-00

city of san luis obispo

HIGUERA STREET BRIDGE REPLACEMENT

FOR REDUCED PLANS ORIGINAL SCALE IS IN MILLIMETERS 0 20 40 60 80 100

APPROVED BY

CITY ENGINEER

DATE	3/2000
SCALE	As Shown
DESIGNED BY	R.G.
DRAWN BY	K.B.
CHECKED BY	A.G.
APPROVED BY	
UTILITIES DEPARTMENT	

ROADWAY LAYOUT (2)

SPECIFICATION NO. 9367

FILE NO./LOCATION 0060 B

SHEET 4R OF 41

DIST	COUNTY	ROUTE	POST MILES TOTAL PROJECT	SHEET NO.	TOTAL SHEETS
5	SLO		–	5	41

Ronald L. Rivett
REGISTERED CIVIL ENGINEER

4/5/00
PLANS APPROVAL DATE

REGISTERED PROFESSIONAL ENGINEER
Ronald L. Rivett
No. 31,269
EXP. 12/31/00
CIVIL
STATE OF CALIFORNIA

MARTIN & KANE, Inc.
2200-B DOUGLAS BLVD, #150
ROSEVILLE • CA 95661

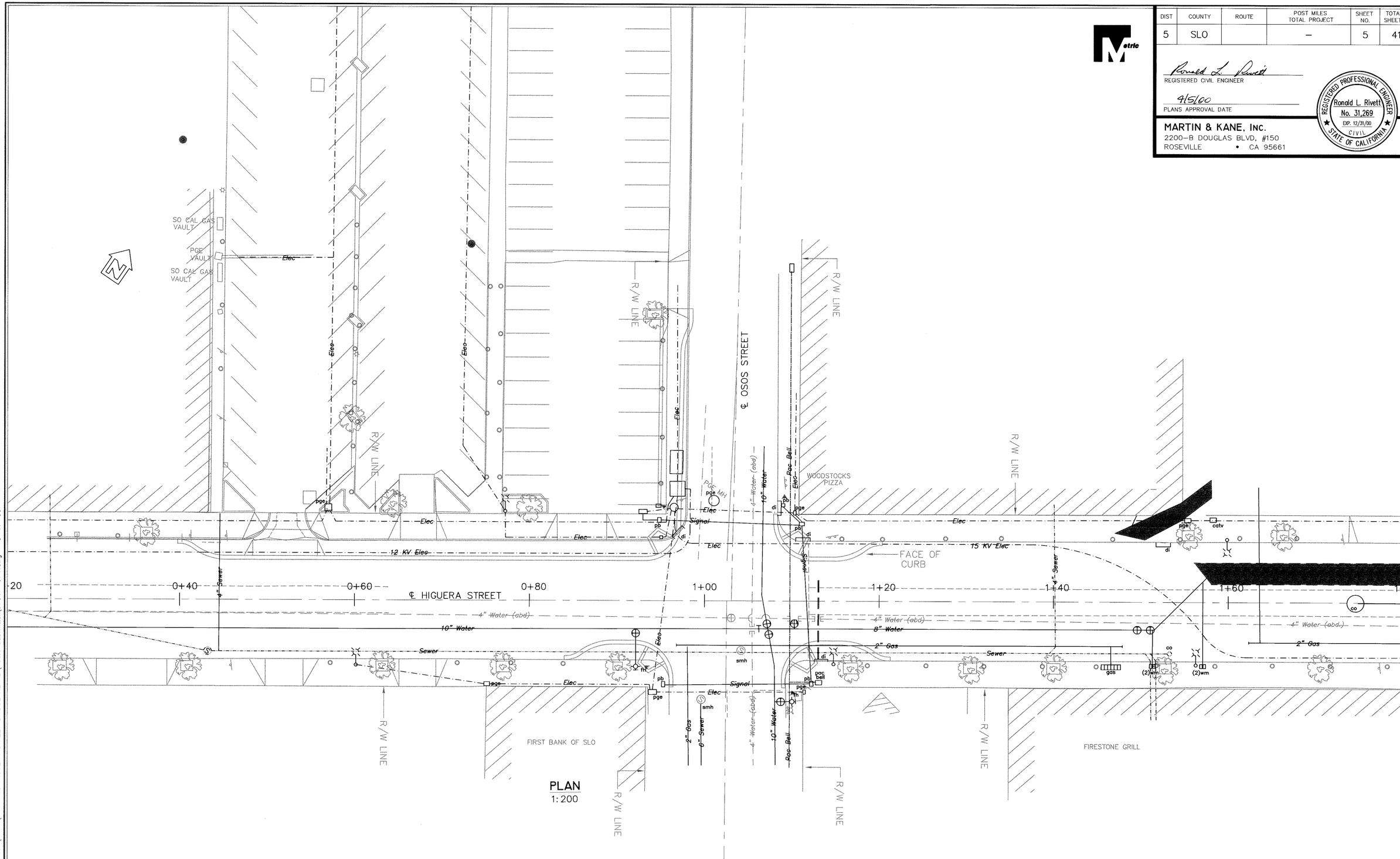

N:\MKSRVR1\MK PROJECTS\1997\97017.00 HIGUERA STREET BRIDGE REHAB\100% Submittal\97017-UP1.dwg 3-17-00

City of San Luis Obispo

HIGUERA STREET BRIDGE REPLACEMENT

FOR REDUCED PLANS ORIGINAL SCALE IS IN MILLIMETERS 0 20 40 60 80 100

APPROVED BY

CITY ENGINEER

DATE	3/2000
SCALE	As Shown
DESIGNED BY	R.C.
DRAWN BY	K.W.
CHECKED BY	R.R.
APPROVED BY	
UTILITIES DEPARTMENT	

UTILITY PLAN NO. 1
(NOT INCLUDING UTILITIES UNDER BRIDGE)

SPECIFICATION NO. 9367

FILE NO./LOCATION 0060 B

SHEET 5 OF 41

DIST	COUNTY	ROUTE	POST MILES TOTAL PROJECT	SHEET NO.	TOTAL SHEETS
5	SLO		–	5	41

REGISTERED CIVIL ENGINEER

PLANS APPROVAL DATE

REGISTERED PROFESSIONAL ENGINEER
Ronald L. Rivett
No. 31,269
EXP. 12/31/00
CIVIL
STATE OF CALIFORNIA

MARTIN & KANE, Inc.
2200-B DOUGLAS BLVD, #150
ROSEVILLE • CA 95661

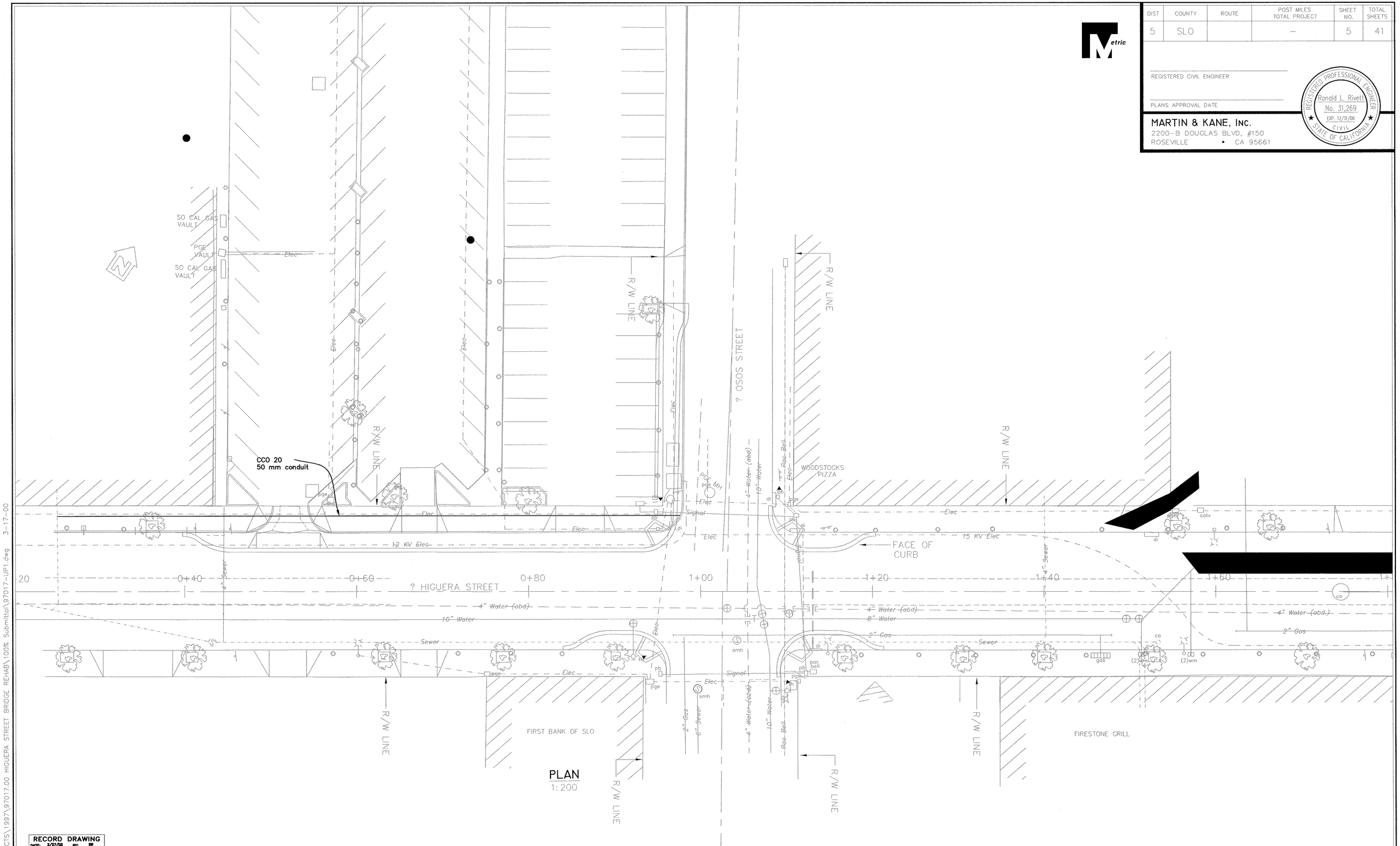

N:\MKSRVR1\MK PROJECTS\1997\97017.00 HIGUERA STREET BRIDGE REHAB\100% Submittal\97017-UP1.dwg 3-17-00

city of san luis obispo

HIGUERA STREET BRIDGE REPLACEMENT

FOR REDUCED PLANS ORIGINAL SCALE IS IN MILLIMETERS 0 20 40 60 80 100

APPROVED BY

CITY ENGINEER

DATE	3/2000
SCALE	As Shown
DESIGNED BY	R.C.
DRAWN BY	K.W.
CHECKED BY	R.R.
APPROVED BY UTILITIES DEPARTMENT	

UTILITY PLAN NO. 1
(NOT INCLUDING UTILITIES UNDER BRIDGE)

SPECIFICATION NO. 9367

FILE NO./LOCATION 0060 B

SHEET 5R OF 41

DIST	COUNTY	ROUTE	POST MILES TOTAL PROJECT	SHEET NO.	TOTAL SHEETS
5	SLO		–	6	41

Ronald L. Rivett
REGISTERED CIVIL ENGINEER

4/5/00
PLANS APPROVAL DATE

REGISTERED PROFESSIONAL ENGINEER
Ronald L. Rivett
No. 31,269
EXP. 12/31/00
CIVIL
STATE OF CALIFORNIA

MARTIN & KANE, INC.
2200-B DOUGLAS BLVD, #150
ROSEVILLE • CA 95661

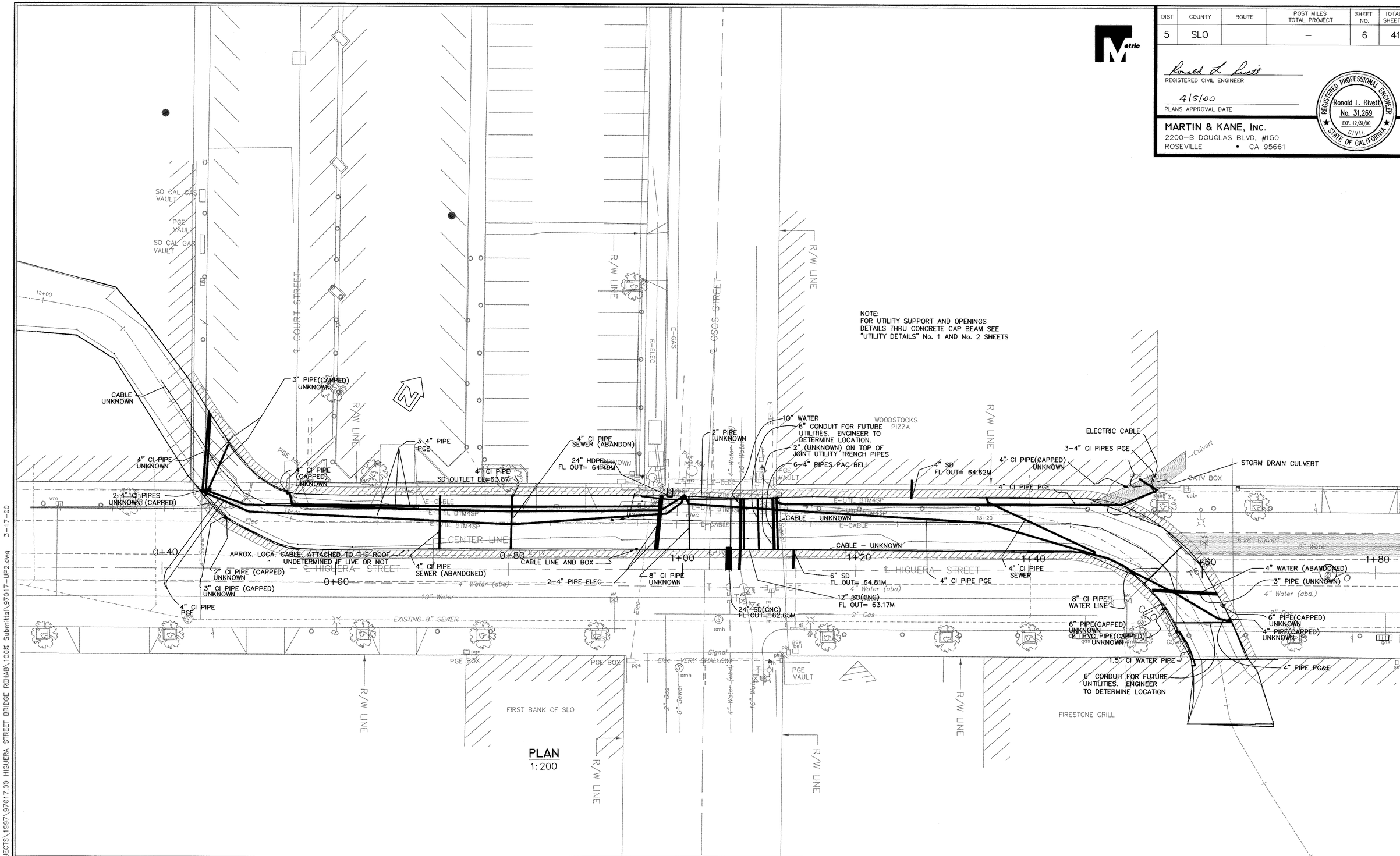

NOTE:
FOR UTILITY SUPPORT AND OPENINGS DETAILS THRU CONCRETE CAP BEAM SEE "UTILITY DETAILS" No. 1 AND No. 2 SHEETS

N:\MKSRVR1\MK PROJECTS\1997\97017.00 HIGUERA STREET BRIDGE REHAB\100% Submittal\97017-UP2.dwg 3-17-00

city of san luis obispo

HIGUERA STREET BRIDGE REPLACEMENT

FOR REDUCED PLANS ORIGINAL SCALE IS IN MILLIMETERS 0 20 40 60 80 100

CITY ENGINEER

DATE	3/2000
SCALE	As Shown
DESIGNED BY	R.C.
DRAWN BY	K.W.
CHECKED BY	M.L.
APPROVED BY	
UTILITIES DEPARTMENT	

UTILITY PLAN NO. 2

EXISTING UTILITIES UNDERNEATH BRIDGE

SPECIFICATION NO. 9367

FILE NO./LOCATION 0660 B

SHEET 6 OF 41

DIST	COUNTY	ROUTE	POST MILES TOTAL PROJECT	SHEET NO.	TOTAL SHEETS
5	SLO		–	6	41

REGISTERED CIVIL ENGINEER

PLANS APPROVAL DATE

REGISTERED PROFESSIONAL ENGINEER
Ronald L. Rivett
No. 31,269
EXP. 12/31/00
CIVIL
STATE OF CALIFORNIA

MARTIN & KANE, Inc.
2200-B DOUGLAS BLVD. #150
ROSEVILLE • CA 95661

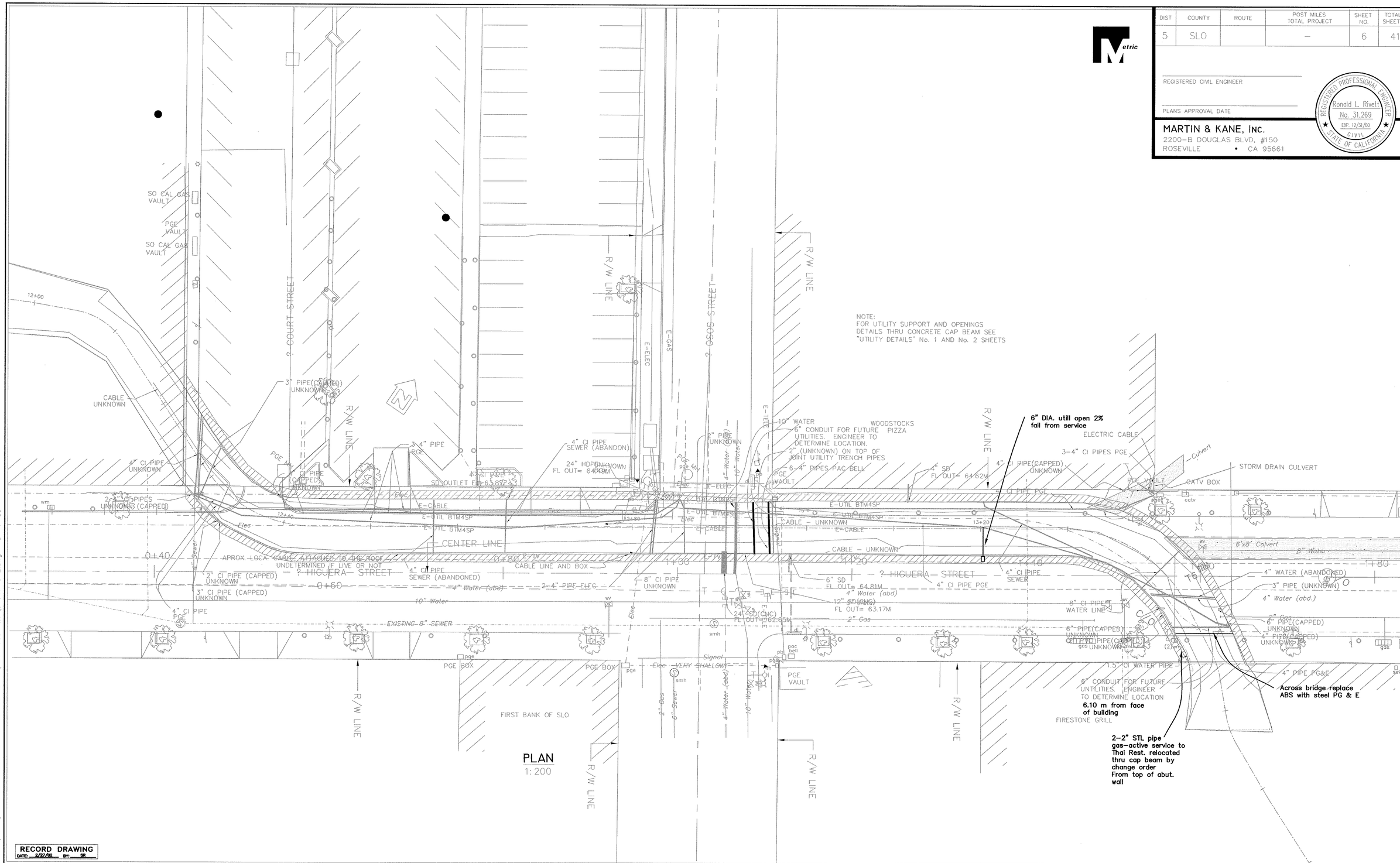

RECORD DRAWING
DATE: 2/21/02 BY: SR

city of san luis obispo

HIGUERA STREET BRIDGE REPLACEMENT

FOR REDUCED PLANS ORIGINAL SCALE IS IN MILLIMETERS 0 20 40 60 80 100

CITY ENGINEER

DATE	3/2000
SCALE	As Shown
DESIGNED BY	R.C.
DRAWN BY	K.W.
CHECKED BY	M.L.
APPROVED BY	
UTILITIES DEPARTMENT	

UTILITY PLAN NO. 2

EXISTING UTILITIES UNDERNEATH BRIDGE

SPECIFICATION NO. 9367

FILE NO./LOCATION 0060 B

SHEET 6R OF 41

N:\MKSRVR1\MK PROJECTS\1997\97017.00 HIGUERA STREET BRIDGE REHAB\100% Submittal\97017-UP2.dwg 3-17-00

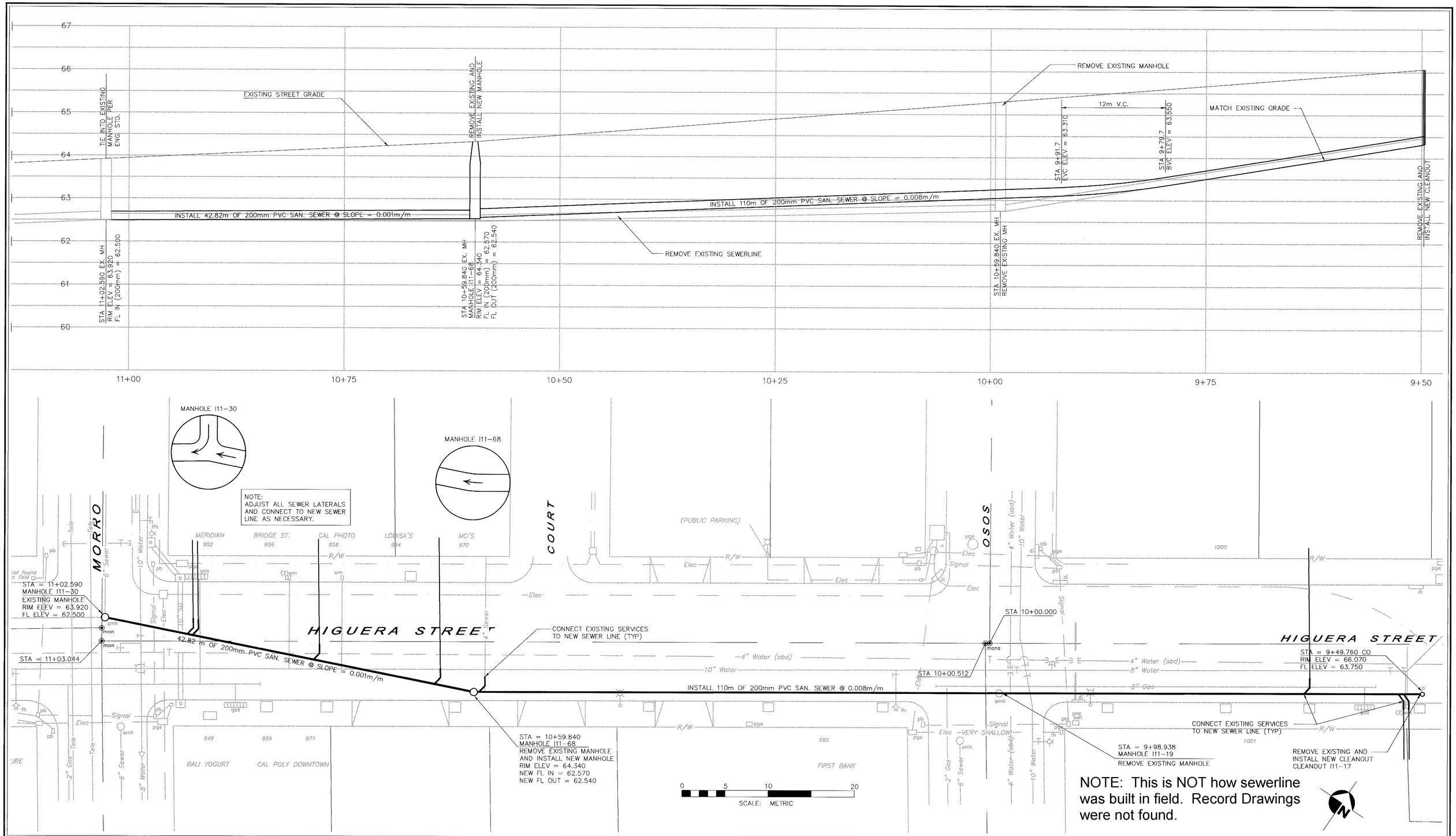

CITY OF SAN LUIS OBISPO

HIGUERA STREET BRIDGE REPLACEMENT

APPROVED
REGISTERED PROFESSIONAL ENGINEER WAYNE A. PETERSON No. 18598 exp. 6/30/09 CIVIL STATE OF CALIFORNIA
CITY ENGINEER

DATE	mar 00
SCALE	as shown
DESIGNED BY	jv
DRAWN BY	jv /sr
CHECKED BY	bl
APPROVED BY	
UTILITIES DEPARTMENT	

SEWERMAIN

SPECIFICATION NO. 9367

FILE NO./LOCATION 0060 B

SHEET 7 OF 41

LEGEND

Limits of street reconstruction.
Grind and remove existing AC overlay – 25–35 mm. Complete AC leveling courses on bridge deck flush with existing PCC street elevation. Install pavement grid. Construct 30 mm AC overlay over roadway and bridge deck, excluding paver crosswalk.

Adjust utility covers to grade per Eng. Std. 6040

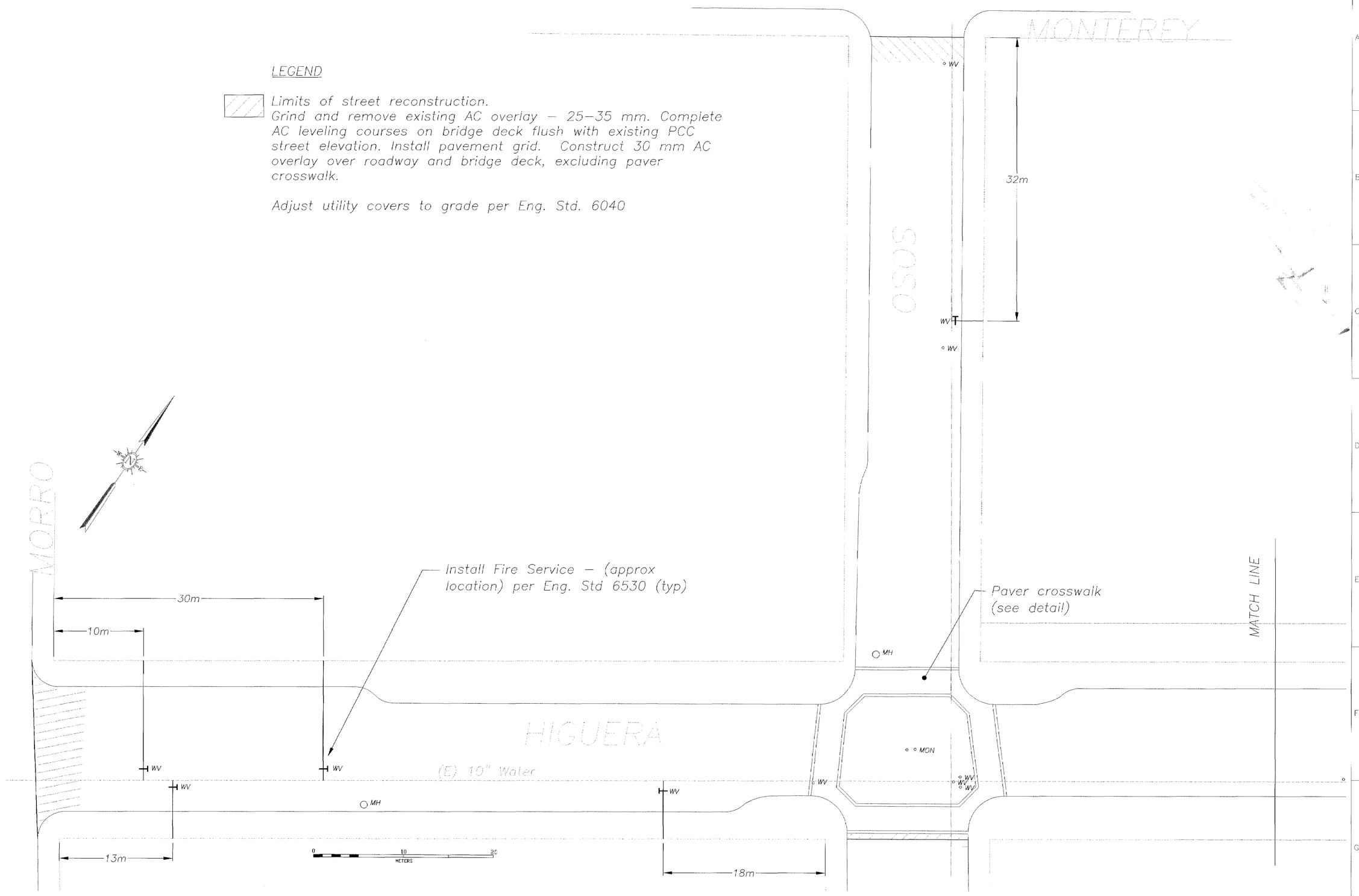

City of San Luis Obispo

REVISIONS:
Record Drawing

Metric Scale:
H: as shown
V: n/a

PROJECT TITLE: HIGUERA BRIDGE REHABILITATION PROJECT

SHEET TITLE: STREET RESURFACING – PLAN 1

DESIGNED BY: bl
DRAWN BY: bl
CHECKED BY: xx
APPROVED BY: wp
DATE: mar 00
CITY SPECIFICATION NO. 9367
SHEET NO. 8 of 41

LEGEND

Limits of street reconstruction.
Grind and remove existing AC overlay – 25–35 mm. Complete AC leveling courses on bridge deck flush with existing PCC street elevation. Install pavement grid. Construct 30 mm AC overlay over roadway and bridge deck, excluding paver crosswalk.

Adjust utility covers to grade per Eng. Std. 6040

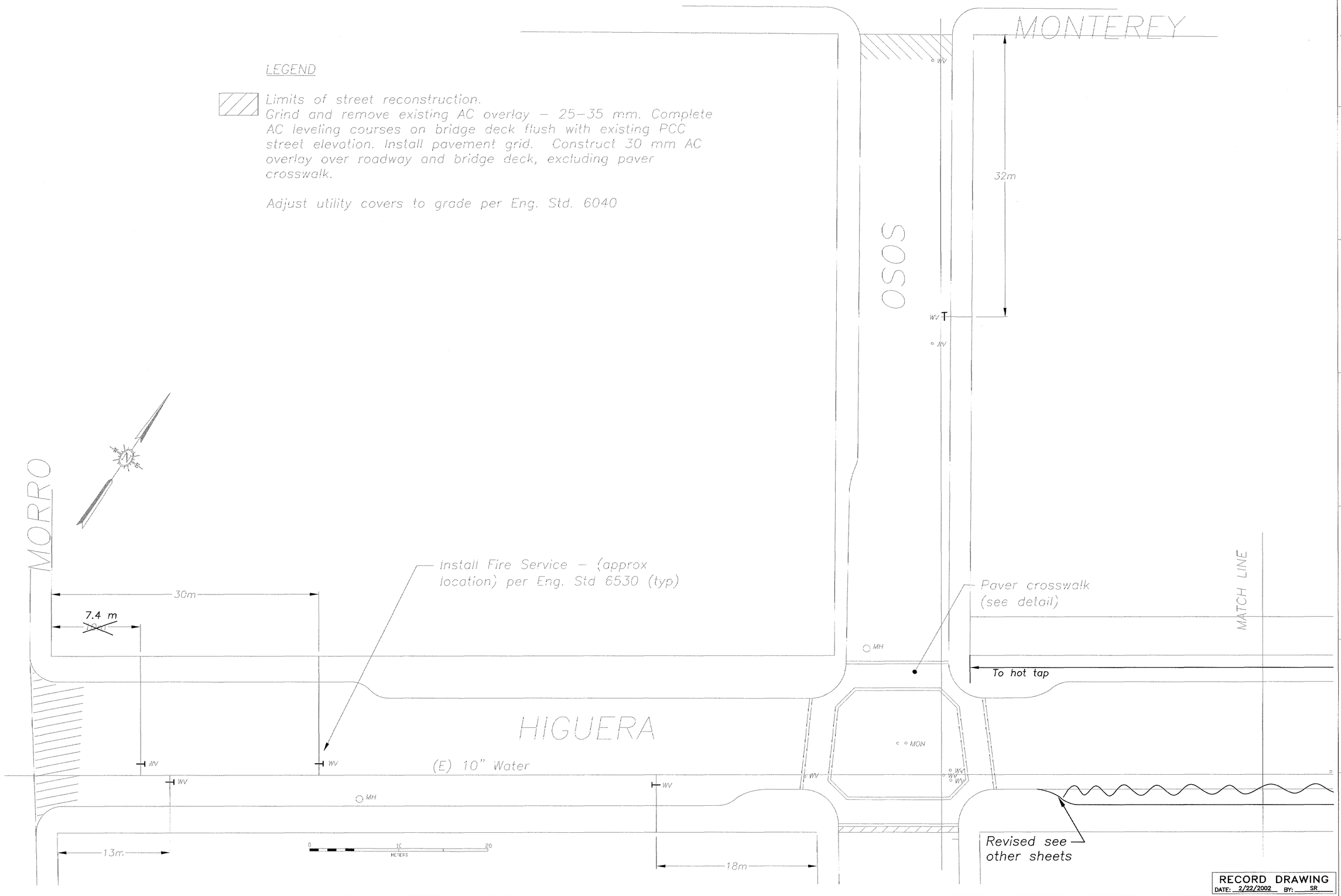

RECORD DRAWING
DATE: 2/22/2002 BY: SR

REGISTERED PROFESSIONAL ENGINEER WAYNE A. PETERSON No. 18598 CIVIL STATE OF CALIFORNIA

City of San Luis Obispo

REVISIONS:
Record Drawing

Metric Scale:
H: as shown
V: n/a

PROJECT TITLE: HIGUERA BRIDGE REHABILITATION PROJECT

SHEET TITLE: STREET RESURFACING – PLAN 1

DESIGNED BY: bl
DRAWN BY: bl
CHECKED BY: xx
APPROVED BY: wp
DATE: mar 00
CITY SPECIFICATION NO. 9367
SHEET NO. 8R of 41

0060 B

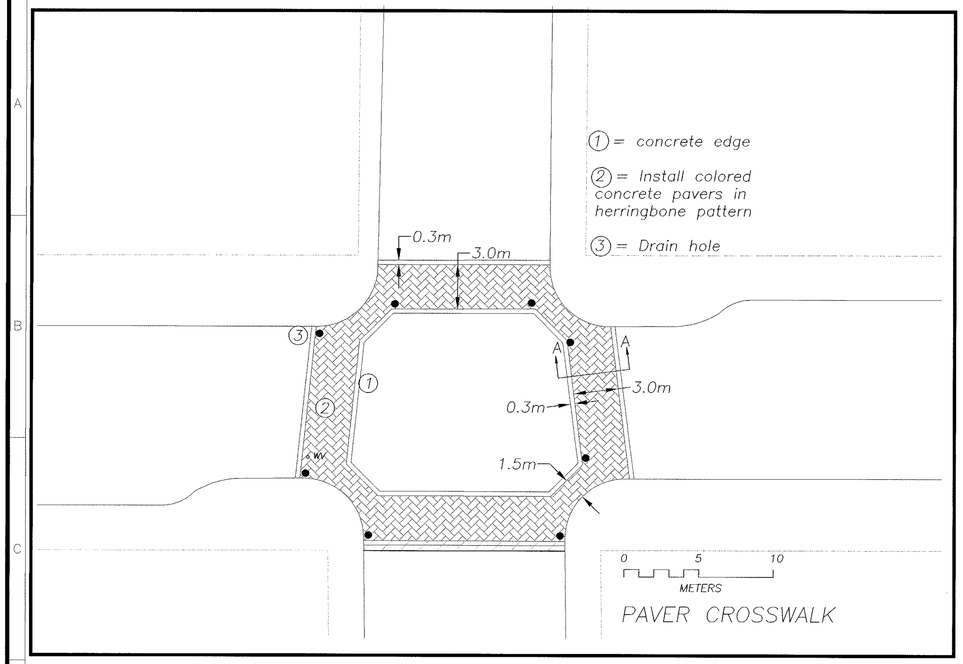

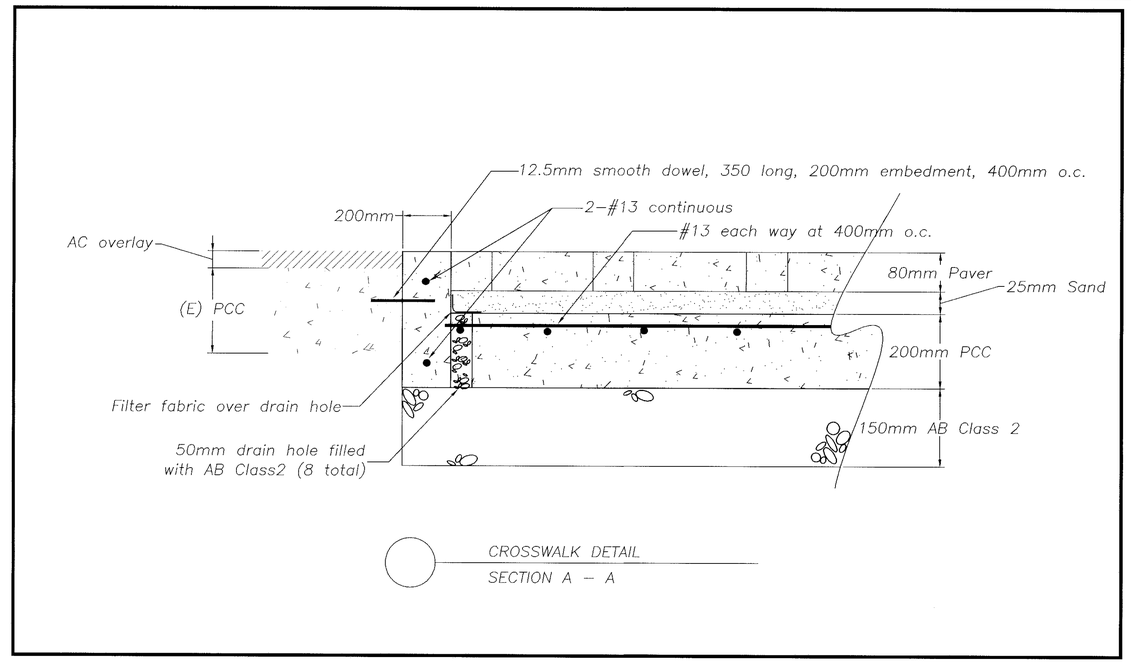

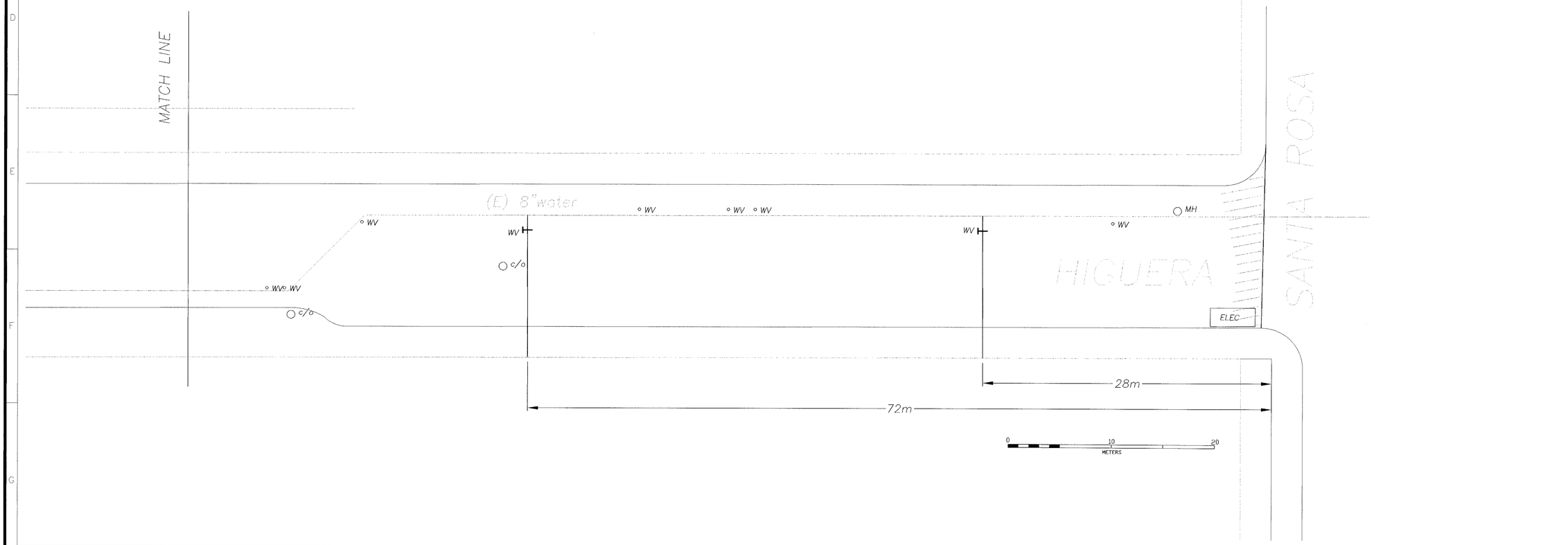

REGISTERED PROFESSIONAL ENGINEER
MARTIN A. PETERSON
No. 18598
exp. 6/30/00
CIVIL
STATE OF CALIFORNIA

city of san luis obispo

REVISIONS:
Record Drawing

Metric Scale:
H: as shown
V: n/a

PROJECT TITLE:
HIGUERA BRIDGE REHABILITATION PROJECT

SHEET TITLE:
STREET RESURFACING – PLAN 2

DESIGNED BY: bl
DRAWN BY: bl
CHECKED BY: xx
APPROVED BY: wp
DATE: mar 00
CITY SPECIFICATION NO. 9367
SHEET NO. 9 of 40

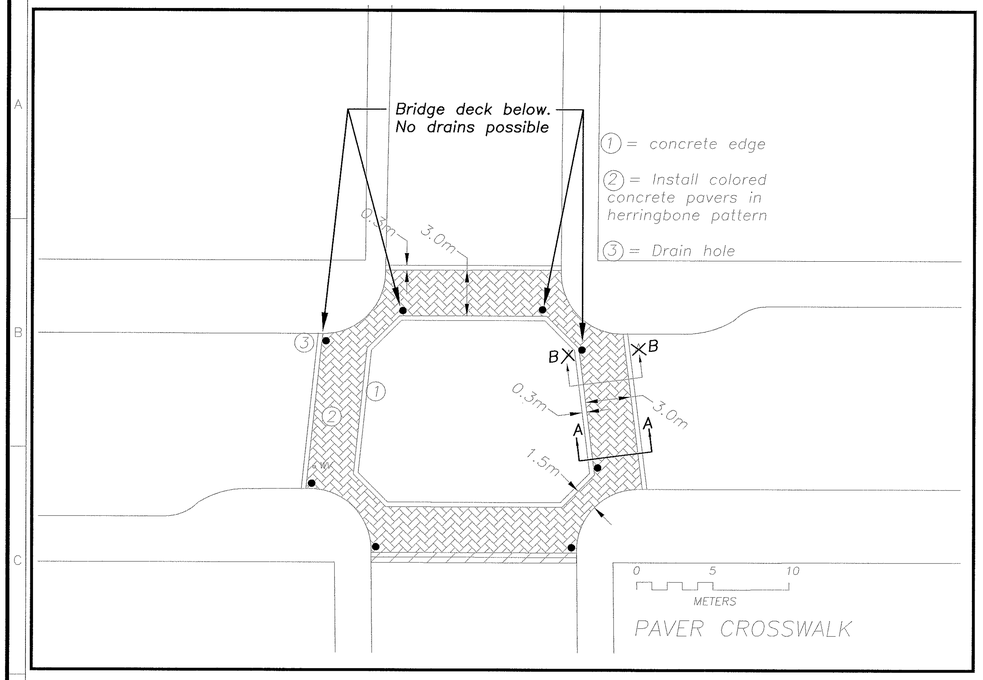

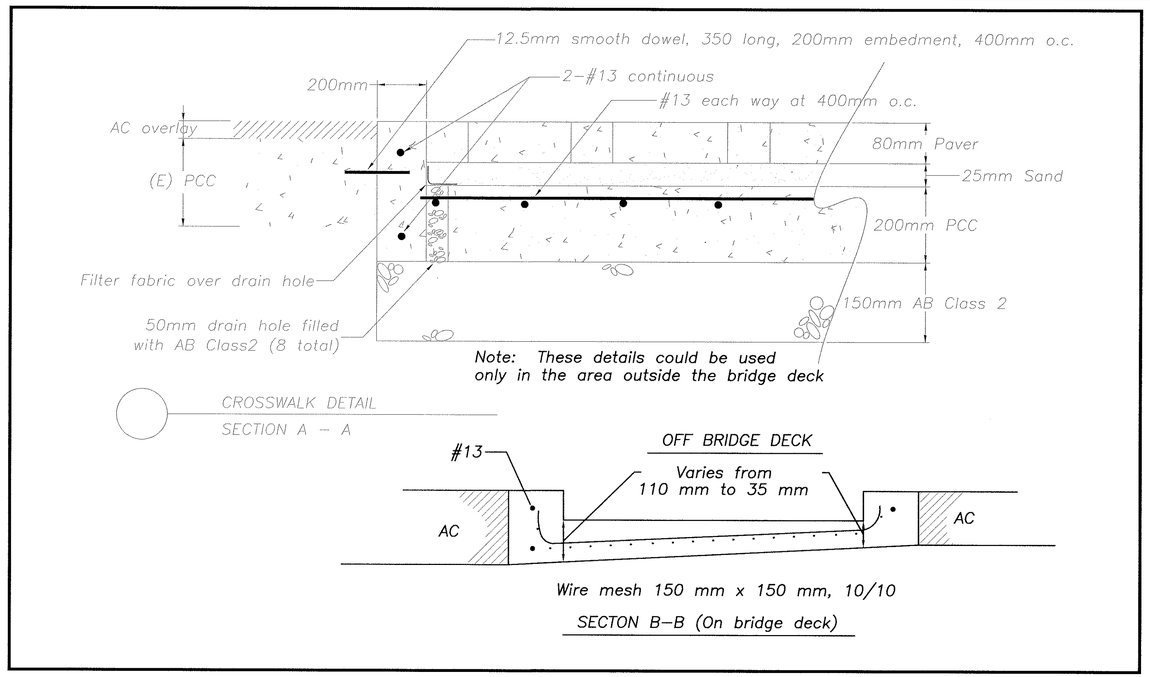

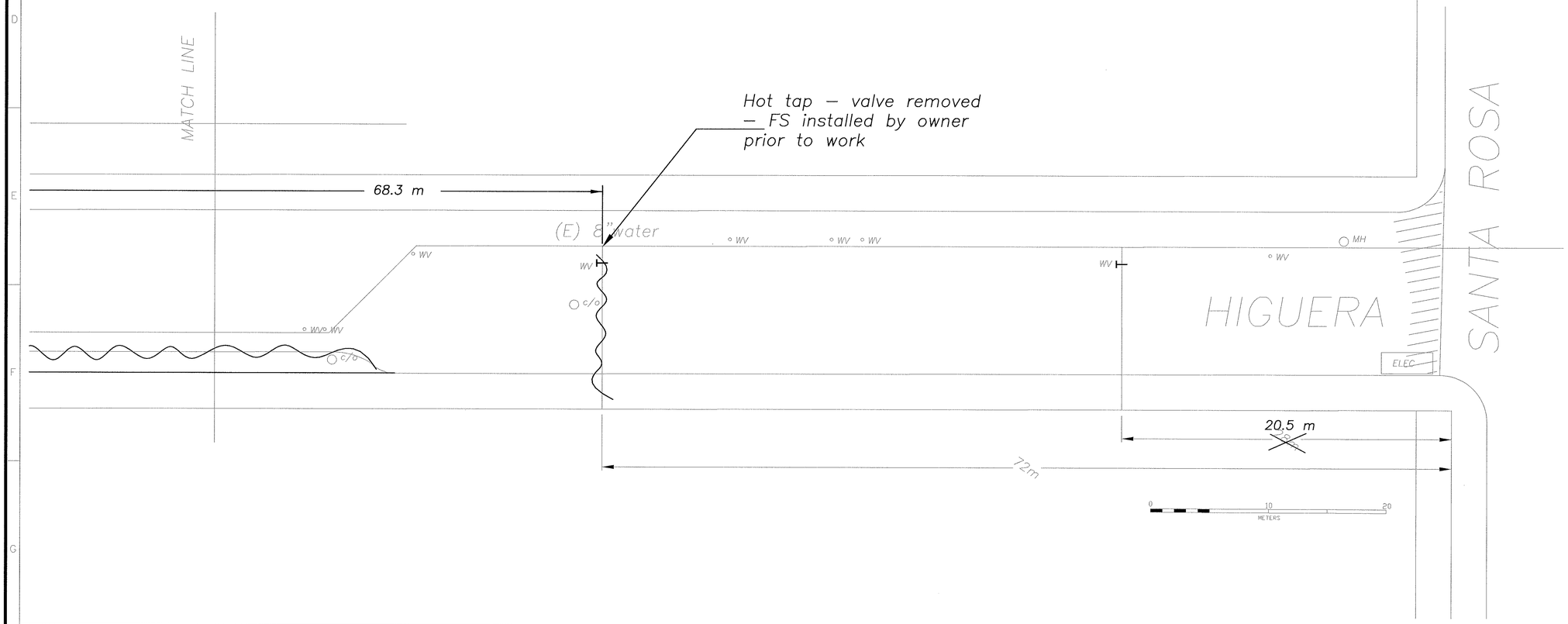

RECORD DRAWING
DATE: 2/22/2002 BY: SR

REGISTERED PROFESSIONAL ENGINEER
WAYNE A. PETERSON
No. 18598
exp.
STATE OF CALIFORNIA

city of san luis obispo

REVISIONS:
Record Drawing

Metric Scale:
H: as shown
V: n/a

PROJECT TITLE: HIGUERA BRIDGE REHABILITATION PROJECT

SHEET TITLE: STREET RESURFACING – PLAN 2

DESIGNED BY: bl
DRAWN BY: bl
CHECKED BY: xx
APPROVED BY: wp
DATE: mar 00
CITY SPECIFICATION NO. 9367
SHEET NO. 9R of 41

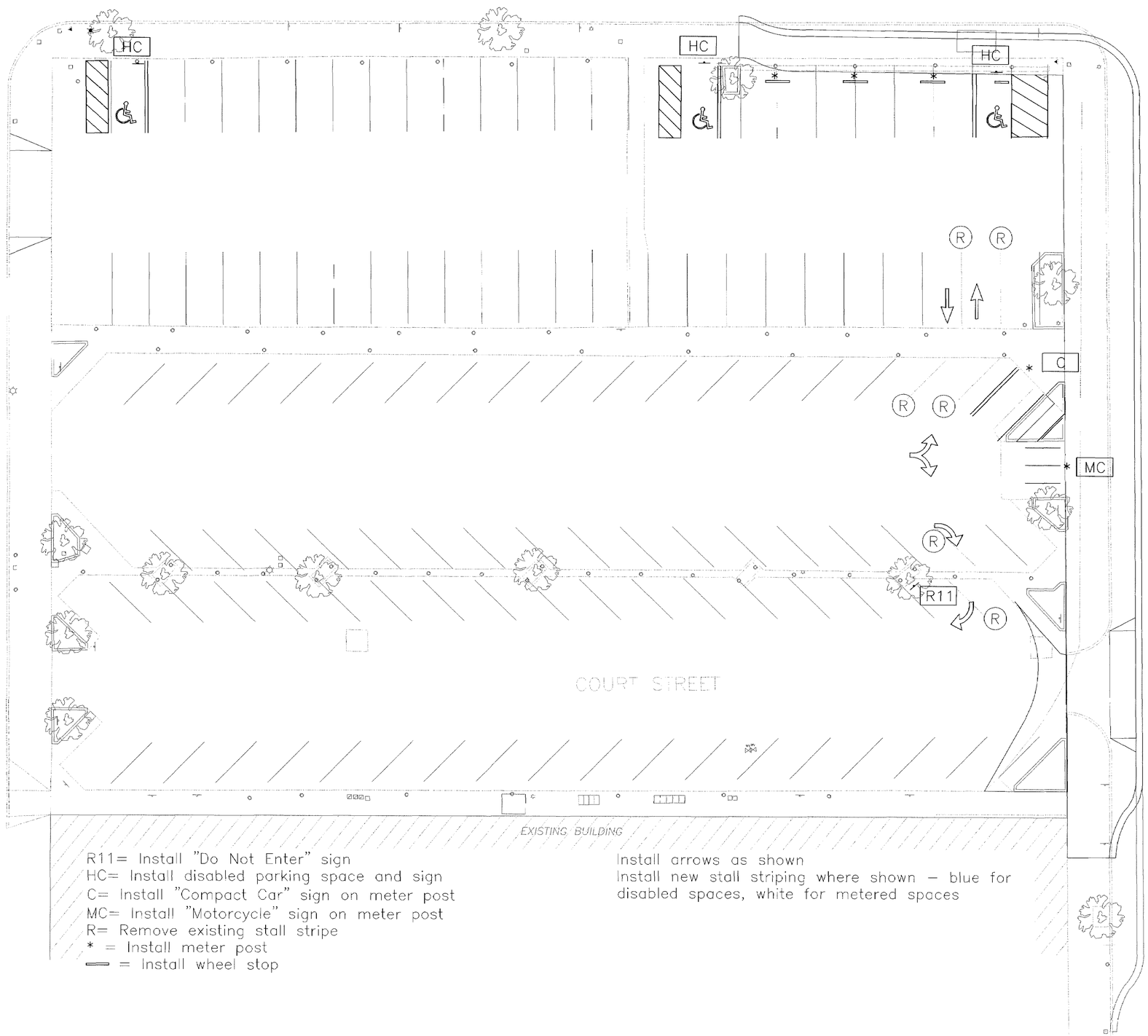

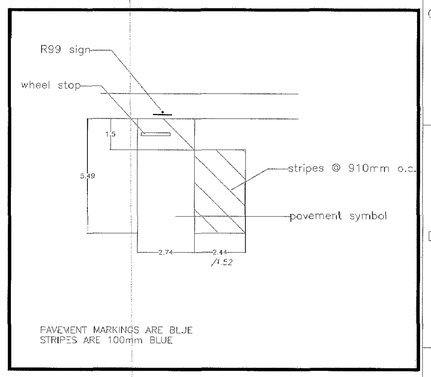

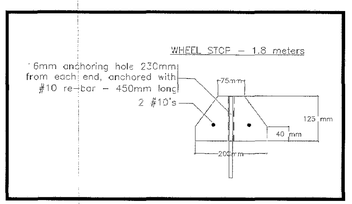

REGISTERED PROFESSIONAL ENGINEER
WAYNE A. PETERSON
No. 15015
STATE OF CALIFORNIA

city of
san luis obispo

REVISIONS:
Record Drawing

Metric Scale:
H: as shown
V: n/a

PROJECT TITLE:
HIGUERA BRIDGE REHABILITATION PROJECT

SHEET TITLE:
LOT 6 STRIPING

DESIGNED BY: bl
DRAWN BY: bl
CHECKED BY: xx
APPRCVED BY: wp
DATE: apr 00
CITY SPECIFICATION NO. 9367
SHEET NO. 10 of 40

OSOS STREET

Exact location of transition to be determined in the field by the Engineer

AC PATCH

HC

GUARD RAIL

AC RAMP

Osos driveway shall not be closed until Monterey driveway is constructed.

6m

MONTEREY STREET

HIGUERA STREET

Removed planter

MC

R11

P.G.& E. AC PATCH

COURT STREET

AC RAMPS

EXISTING BUILDING

R99 sign

wheel stop

stripes @ 910mm o.c.

pavement symbo

1.5

5.49

2.74

2.44

1.52

PAVEMENT MARKINGS ARE BLUE
STRIPES ARE 100mm BLUE

WHEEL STOP - 1.8 meters

16mm anchoring hole 230mm from each end, anchored with #10 re-bar - 450mm long

2 #10's

75mm

125 mm

46 mm

200mm

R11= Install "Do Not Enter" sign
HC= Install disabled parking space and sign
C= Install "Compact Car" sign or meter post
MC= Install "Motorcycle" sign on meter post
R= Remove existing stall stripe
* = Install meter post
= Install wheel stop

Install arrows as shown
Install new stall striping where shown - blue for disabled spaces, white for metered spaces

0 10 20
METERS

RECORD DRAWING
DATE: 2/22/2002 BY: SR

REGISTERED PROFESSIONAL ENGINEER
WAYNE A. PETERSON
No. 18598
CIVIL
STATE OF CALIFORNIA

CITY OF SAN LUIS OBISPO

REVISIONS
Record Drawing

Metric Scale:
H: as shown
V: n/a

PROJECT TITLE:
HIGUERA BRIDGE REHABILITATION PROJECT

SHEET TITLE:
LOT 6 STRIPING

DESIGNED BY: bl
DRAWN BY: bl
CHECKED BY: xx
APPROVED BY: wp
DATE: apr 00
CITY SPECIFICATION NO. 9367
SHEET NO. 10R of 41

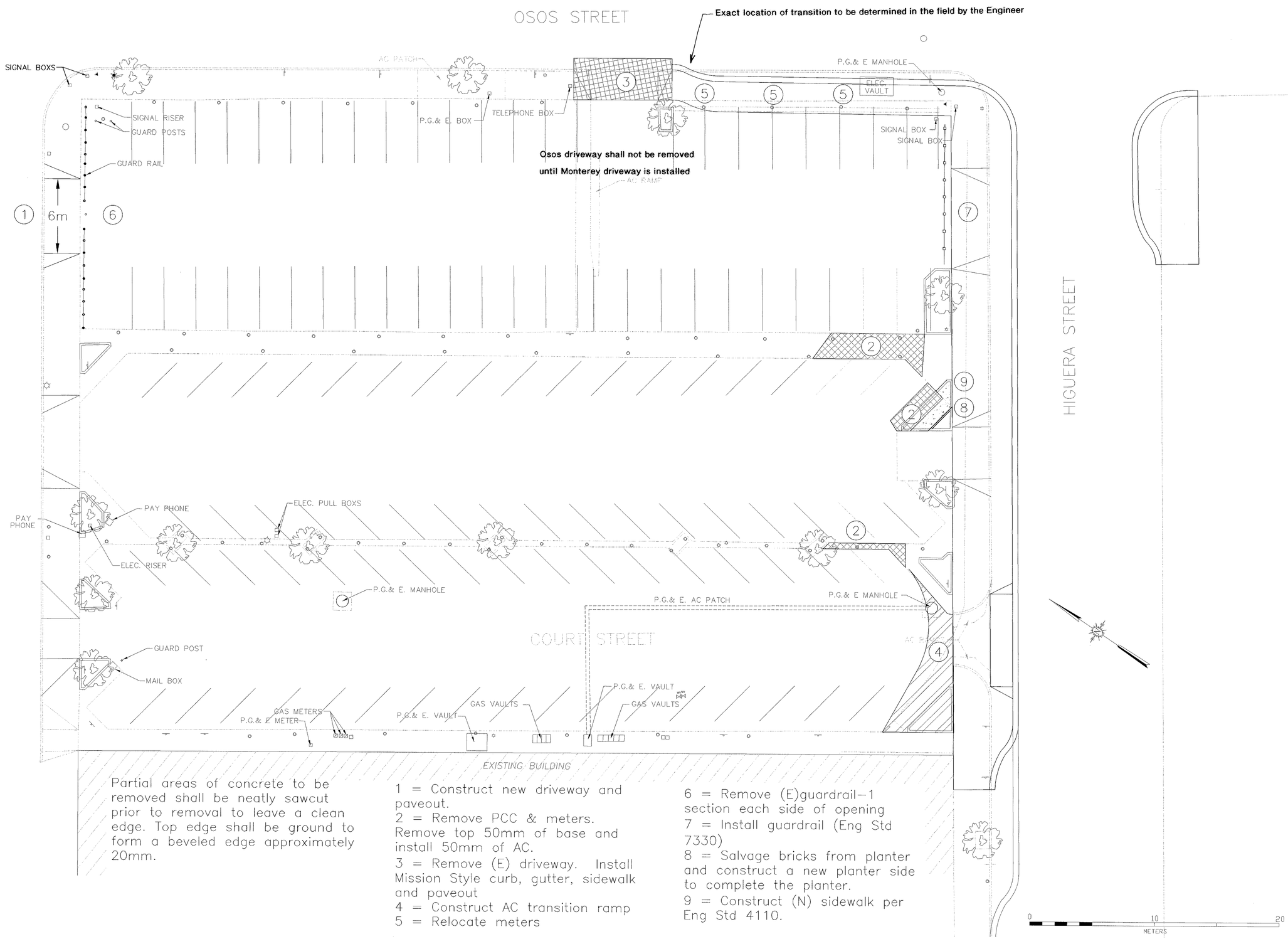

Partial areas of concrete to be removed shall be neatly sawcut prior to removal to leave a clean edge. Top edge shall be ground to form a beveled edge approximately 20mm.

1 = Construct new driveway and paveout.
2 = Remove PCC & meters. Remove top 50mm of base and install 50mm of AC.
3 = Remove (E) driveway. Install Mission Style curb, gutter, sidewalk and paveout
4 = Construct AC transition ramp
5 = Relocate meters

6 = Remove (E)guardrail--1 section each side of opening
7 = Install guardrail (Eng Std 7330)
8 = Salvage bricks from planter and construct a new planter side to complete the planter.
9 = Construct (N) sidewalk per Eng Std 4110.

REGISTERED PROFESSIONAL ENGINEER
WAYNE A. PEARSON
No. 18598
exp. 6/30/01
CIVIL
STATE OF CALIFORNIA

city of
san luis obispo

REVISIONS:
Drawn By & Date
Record Drawing
Drawn By & Date

Metric Scale:
H: as shown
V: n/a

PROJECT TITLE:
HIGUERA BRIDGE REHABILITATION PROJECT

SHEET TITLE:
LOT 6 EARTHWORK

DESIGNED BY: bl
DRAWN BY: bl
CHECKED BY: xx
APPROVED BY: wp
DATE: apr 00
CITY SPECIFICATION NO. 9367
SHEET NO. 11 of 40

DIST	COUNTY	ROUTE	KILOMETER POST TOTAL PROJECT	SHEET NO.	TOTAL SHEETS
05	SLO	-	-	12	41

REGISTERED CIVIL ENGINEER 3-28-00

PLANS APPROVAL DATE

REGISTERED PROFESSIONAL ENGINEER M.K. FRANKLIN No. 15487 Exp. 3/31/01 CIVIL STATE OF CALIFORNIA

ASSOCIATED TRANSPORTATION ENGINEERS
100 N. Hope Ave, Suite 4
Santa Barbara, CA 93110

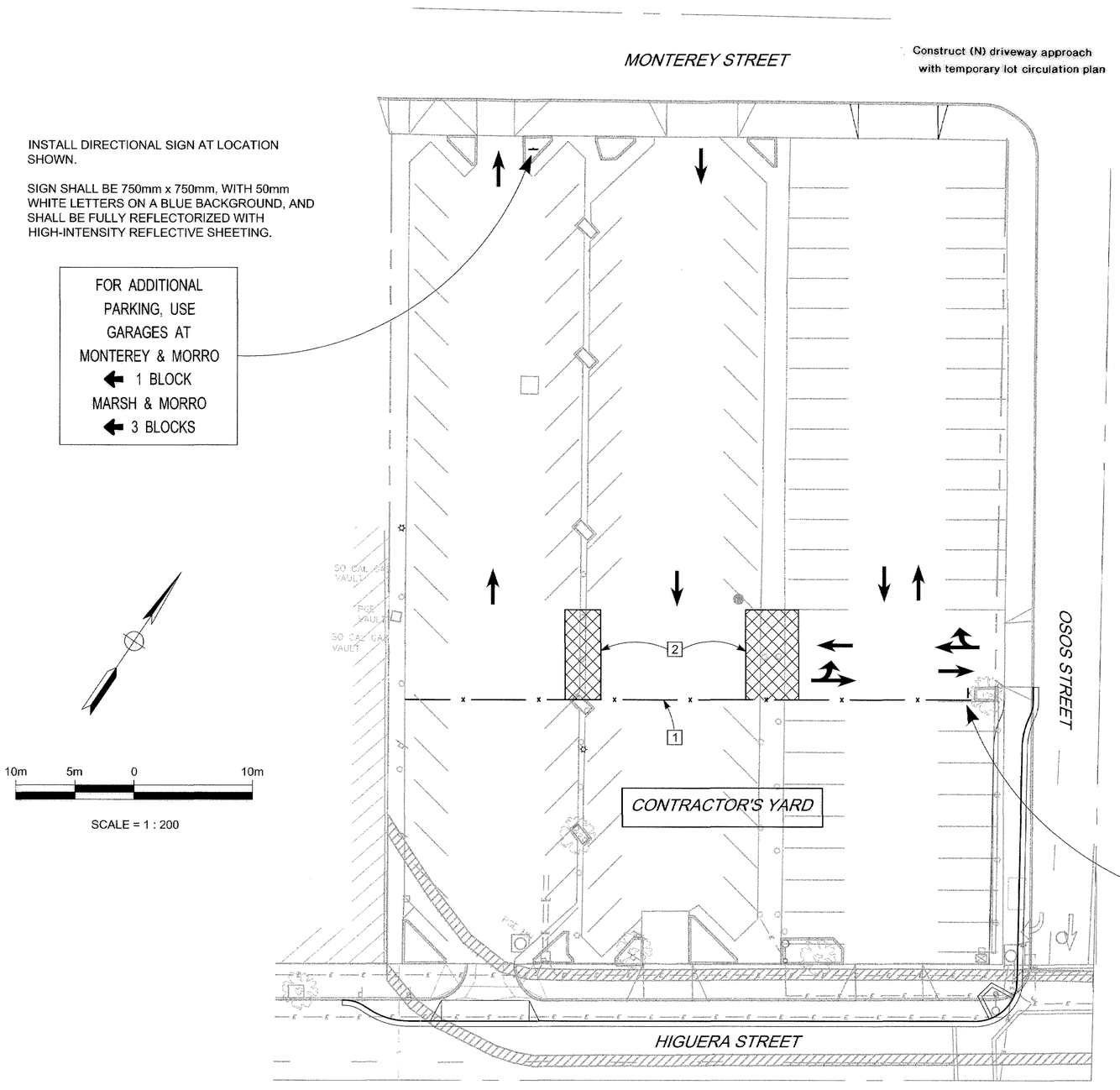

CONSTRUCTION NOTES

1. PRIOR TO COMMENCING CONSTRUCTION DEMOLITION, THE CONTRACTOR SHALL ESTABLISH HIS YARD BY FENCING OFF THE PARKING LOT AS SHOWN. ACCESS GATES MAY BE PLACED IN THE FENCING AS REQUIRED.

2. TO MAINTAIN PARKING CIRCULATION IN THE REMAINDER OF THE PARKING LOT, THE CONTRACTOR SHALL REMOVE CURBS, PARKING STALL LINES, AND PARKING METERS IN THE SHADED AREAS AND SHALL PROVIDE TEMPORARY PAVING TO PERMIT THE CIRCULATION PATTERN SHOWN. REMOVED METERS SHALL BE DELIVERED TO THE CITY MAINTENANCE YARD AS DIRECTED BY THE ENGINEER.

THE CONTRACTOR SHALL PAINT DIRECTIONAL ARROWS ON THE PARKING LOT PAVEMENT AS SHOWN TO DIRECT TRAFFIC WITHIN THE RECONFIGURED PARKING AREA.

UPON COMPLETION OF CONSTRUCTION, THE PARKING LOT SHALL BE RESTORED AS DIRECTED BY THE ENGINEER.

FOR PERMANENT PARKING LOT IMPROVEMENT DETAILS SEE "LOT 6 STRIPING" AND "LOT 6 EARTHWORK" PLAN SHEETS.

AT NO TIME SHALL THE CONTRACTOR PARK ANY VEHICLE WITHIN THE PUBLIC PARKING AREA OF THE LOT, OTHER THAN TO LOCK/UNLOCK ACCESS GATES.

INSTALL DIRECTIONAL SIGN AT LOCATION SHOWN.

SIGN SHALL BE 750mm x 750mm, WITH 50mm WHITE LETTERS ON A BLUE BACKGROUND, AND SHALL BE FULLY REFLECTORIZED WITH HIGH-INTENSITY REFLECTIVE SHEETING.

FOR ADDITIONAL PARKING, USE GARAGES AT MONTEREY & MORRO
2 BLOCKS
MARSH & MORRO
3 BLOCKS

T2\97106.T2 Parking.dwg Tue Mar 28 14:23:37 2000 ATE

CITY OF SAN LUIS OBISPO

HIGUERA STREET BRIDGE REPLACEMENT

APPROVED BY
CITY ENGINEER

DATE 3/2000
SCALE 1:200
DESIGNED BY MKF
DRAWN BY MCD
CHECKED BY MKF
APPROVED BY
UTILITIES DEPARTMENT

PARKING LOT CIRCULATION PLAN
HIGUERA STREET / OSOS STREET

SPECIFICATION NO. 9367
FILE NO./LOCATION 0066 B
SHEET 12 OF 41

DIST	COUNTY	ROUTE	KILOMETER POST TOTAL PROJECT	SHEET NO.	TOTAL SHEETS
05	SLO	-	-	12	38

REGISTERED CIVIL ENGINEER

PLANS APPROVAL DATE

REGISTERED PROFESSIONAL ENGINEER
M.K. FRANKLIN
No. 15487
Exp. 3/31/01
CIVIL
STATE OF CALIFORNIA

ASSOCIATED TRANSPORTATION ENGINEERS
100 N. Hope Ave, Suite 4
Santa Barbara, CA 93110

INSTALL DIRECTIONAL SIGN AT LOCATION SHOWN.

SIGN SHALL BE 750mm x 750mm, WITH 50mm WHITE LETTERS ON A BLUE BACKGROUND, AND SHALL BE FULLY REFLECTORIZED WITH HIGH-INTENSITY REFLECTIVE SHEETING.

FOR ADDITIONAL PARKING, USE GARAGES AT PALM ~~MONTEREY~~ & MORRO
← 1 BLOCK
MARSH & MORRO
← 3 BLOCKS

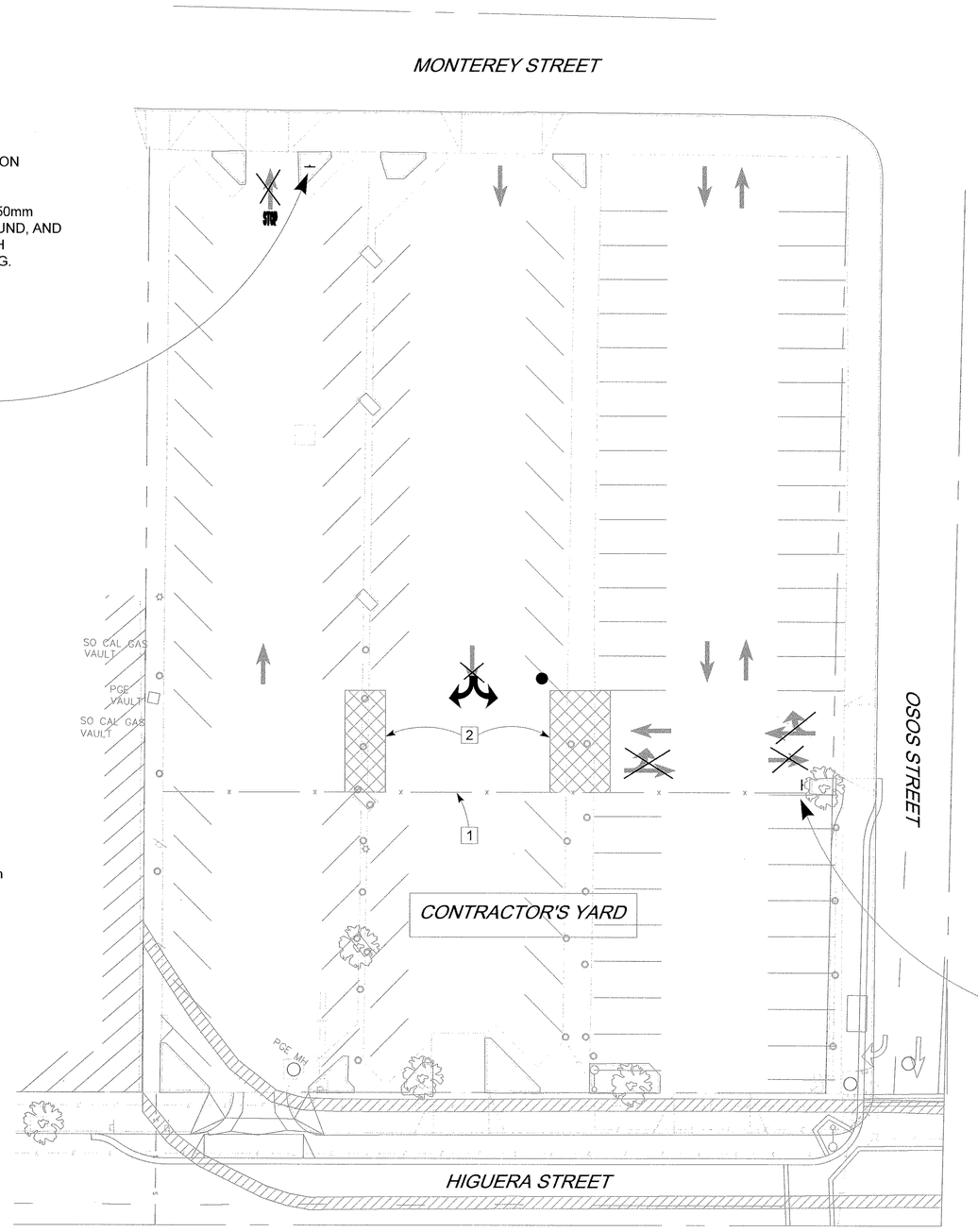

10m 5m 0 10m

SCALE = 1 : 200

CONSTRUCTION NOTES

1. PRIOR TO COMMENCING CONSTRUCTION DEMOLITION, THE CONTRACTOR SHALL ESTABLISH HIS YARD BY FENCING OFF THE PARKING LOT AS SHOWN. ACCESS GATES MAY BE PLACED IN THE FENCING AS REQUIRED.

2. TO MAINTAIN PARKING CIRCULATION IN THE REMAINDER OF THE PARKING LOT, THE CONTRACTOR SHALL REMOVE CURBS, PARKING STALL LINES, AND PARKING METERS IN THE SHADED AREAS AND SHALL PROVIDE TEMPORARY PAVING TO PERMIT THE CIRCULATION PATTERN SHOWN. REMOVED METERS SHALL BE DELIVERED TO THE CITY MAINTENANCE YARD AS DIRECTED BY THE ENGINEER.

THE CONTRACTOR SHALL PAINT DIRECTIONAL ARROWS ON THE PARKING LOT PAVEMENT AS SHOWN TO DIRECT TRAFFIC WITHIN THE RECONFIGURED PARKING AREA.

UPON COMPLETION OF CONSTRUCTION, THE PARKING LOT SHALL BE RESTORED AS DIRECTED BY THE ENGINEER.

FOR PERMANENT PARKING LOT IMPROVEMENT DETAILS SEE "LOT 6 STRIPING" AND "LOT 6 EARTHWORK" PLAN SHEETS.

AT NO TIME SHALL THE CONTRACTOR PARK ANY VEHICLE WITHIN THE PUBLIC PARKING AREA OF THE LOT, OTHER THAN TO LOCK/UNLOCK ACCESS GATES.

INSTALL DIRECTIONAL SIGN AT LOCATION SHOWN.

SIGN SHALL BE 750mm x 750mm, WITH 50mm WHITE LETTERS ON A ~~BLUE~~ GREEN BACKGROUND, AND SHALL BE FULLY REFLECTORIZED WITH HIGH-INTENSITY REFLECTIVE SHEETING.

FOR ADDITIONAL PARKING, USE GARAGES AT PALM ~~MONTEREY~~ & MORRO
← 2 BLOCKS
MARSH & MORRO
3 BLOCKS →

RECORD DRAWING
DATE: 2/27/02 BY: SR

city of san luis obispo

HIGUERA STREET BRIDGE REPLACEMENT

APPROVED BY

CITY ENGINEER

DATE	3/2000
SCALE	1:200
DESIGNED BY	MKF
DRAWN BY	MCD
CHECKED BY	MKF
APPROVED BY	
UTILITIES DEPARTMENT	

PARKING LOT CIRCULATION PLAN
HIGUERA STREET / OSOS STREET

SPECIFICATION NO. 9367

FILE NO./LOCATION 06b B

SHEET 12R OF 41

DIST	COUNTY	ROUTE	KILOMETER POST TOTAL PROJECT	SHEET NO.	TOTAL SHEETS
05	SLO	-	-	13	41

REGISTERED CIVIL ENGINEER 3-28-00

PLANS APPROVAL DATE

REGISTERED PROFESSIONAL ENGINEER M.K. FRANKLIN No. 15487 Exp. 3/31/01 CIVIL STATE OF CALIFORNIA

ASSOCIATED TRANSPORTATION ENGINEERS
100 N. Hope Ave, Suite 4
Santa Barbara, CA 93110

GENERAL SIGNAL NOTES

1. ALL SIGNAL AND LIGHTING WORK SHALL CONFORM TO THE STATE OF CALIFORNIA DEPARTMENT OF TRANSPORTATION STANDARD SPECIFICATIONS AND STANDARD PLANS DATED JULY 1999 (METRIC), AND THE SPECIAL PROVISIONS ACCOMPANYING THIS PLAN.
2. THE CONTRACTOR SHALL MAINTAIN EXISTING LIGHTING CIRCUITS DURING CONSTRUCTION, EXCEPT AS DIRECTED BY THE ENGINEER. SEE SPECIAL PROVISIONS.
3. ALL VEHICLE SIGNAL HEADS SHALL BE 300mm AND SHALL HAVE BACKPLATES.
4. THE LOCATIONS OF ALL ELECTRICAL EQUIPMENT TO BE INSTALLED BY THE CONTRACTOR SHALL BE APPROVED BY THE ENGINEER PRIOR TO CONSTRUCTION.
5. BONDING AND GROUNDING CONDUCTORS REQUIRED BY THE NATIONAL ELECTRICAL CODE AND BY THE STANDARD SPECIFICATIONS ARE NOT SHOWN ON CONDUCTOR SCHEDULES. THE CONTRACTOR SHALL ENSURE THAT THE ENTIRE MODIFIED SIGNAL AND LIGHTING SYSTEMS ARE BONDED AND GROUNDED AS REQUIRED BY THE STANDARD SPECIFICATIONS AND THE CODE.
6. IN ADDITION TO THE STANDARD ABBREVIATIONS ON STANDARD PLAN ES-1A, NISNS INDICATES NON-ILLUMINATED STREET NAME SIGN.
7. THE CONTRACTOR SHALL VERIFY THE SIZE AND SUITABILITY FOR USE OF ALL EXISTING CONDUITS TO BE REUSED. THE CONTRACTOR SHALL IMMEDIATELY NOTIFY THE ENGINEER IF ANY EXISTING CONDUIT IS FOUND TO BE UNSATISFACTORY FOR USE.
8. CONDUITS INSTALLED IN STRUCTURES SHALL CONFORM TO THE DETAILS SHOWN ON THE STRUCTURES PLANS.

POLE & EQUIPMENT SCHEDULE

LOC	STANDARDS			VEH. SIG. MTG.		PED. SIG.	HPS	NISNS LEGEND		LOCATION		REMARKS
	TYPE	SIG. M.A.	L.M.A.	M.A.	POLE	MOUNTING	LUMINAIRE	FRONT	BACK	A	B	
Ⓐ	Special 'A'	3.05m	2.44m	MAS	SV-1-T	SP-1-T	200 W	Osos	Osos	0.35m	1.00m	ALL NEW 3 6 7
Ⓑ	1-A-3.05m	-	-	-	TV-1-T	SP-1-T	-	-	-	1.97m	2.20m	ALL NEW
Ⓒ	1-A-3.05m(E)	-	-	-	TV-1-T(N)	SP-1-T(N)	-	-	-	EXISTING		EXIST. POLE, NEW SIGNALS 4
Ⓓ	1-A-2.13m	-	-	-	-	TP-1-T	-	-	-	0.27m	1.00m	ALL NEW 6
Ⓔ	1-A-2.13m	-	-	-	-	TP-1-T	-	-	-	0.00m	1.00m	ALL NEW
Ⓕ	Special 'B'	-	2.44m	-	SV-1-T	SP-1-T	200 W	-	-	1.19m	0.67m	RL EXIST. POLE, NEW SIGNALS 5 7
Ⓖ	1-A-3.05m	-	-	-	TV-1-T	SP-1-T	-	-	-	0.00m	1.00m	ALL NEW
Ⓗ	Special 'C'	3.05m	-	MAS	SV-1-T	SP-1-T	-	Osos	Osos	0.39m	1.00m	ALL NEW 3

After locating standard per dimensions noted above, ensure compliance with General Note 4. For "A" and "B" dimensions see detail this sheet.
Red vehicle indications and Portland Orange Don't Walk symbols shall be LED. See Special Provisions.
For Special Poles Ⓐ Ⓑ & Ⓒ, see details this sheet and special provisions.
All poles and mast arms shall be painted "Slate Green" per City Standards.

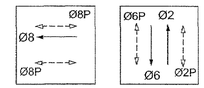

PHASE DIAGRAM

INSTALLATION NOTES

1. RELOCATE EXISTING MODEL 170 CONTROLLER ASSEMBLY, MODEL 303 CABINET AND PEDESTAL, AND TYPE II SERVICE EQUIPMENT ENCLOSURE TO NEW LOCATION AT BACK OF SIDEWALK, WITHIN RIGHT OF WAY. RC CONDUITS TO EXISTING SERVICE AND CONTROLLER, AND INSTALL OR EXTEND CONDUITS TO NEW LOCATION AS SHOWN.
2. EXISTING PG&E SERVICE POINT AT PG&E HAND HOLE.
3. FURNISH AND INSTALL NISNS ON SIGNAL MAST ARM PER DETAIL THIS SHEET. SEE SPECIAL PROVISIONS. LEGEND SHALL BE AS SHOWN ON POLE & EQUIPMENT SCHEDULE.
4. RS EXISTING SIGNAL HEADS AND TV-2-T MOUNTING. FURNISH AND INSTALL SIGNAL HEAD AND TV-1-T MOUNTING, PEDESTRIAN HEAD AND SP-1-T MOUNTING, AS SHOWN. OFFSET VEHICLE SIGNAL HEAD AWAY FROM CURB LINE.
5. RS EXISTING TYPE 1-A POLE AND SIGNAL EQUIPMENT. REMOVE EXISTING FOUNDATION. RL EXISTING SPECIAL TYPE B ELECTROLIER TO NEW LOCATION SHOWN. INSTALL VEHICLE AND PEDESTRIAN SIGNAL HEADS ON POLE AS SHOWN.
6. INSTALL SIGNAL POLE ON SPECIAL FOUNDATION ON BRIDGE STRUCTURE AS SHOWN ON BRIDGE PLANS. (SEE "ABUTMENT DETAILS NO.2" SHEET.)
7. INSTALL DUPLEX RECEPTACLE IN WEATHER PROOF BOX AT TOP OF POLE.
8. RE-ROUTE EXISTING 53mm FIBER CONDUIT TO NEW PULL BOX LOCATION.

CONDUIT AND CONDUCTOR SCHEDULE

	CIRCUIT	CONDUIT RUN AND SIZE						
		1	2	3	4	5	6	7
		78	78	78	78	53	41	53
AWG or CABLE	CONDUIT	N	N	N	N	X	X	X
	CONDUCTORS	N	N	N	N	R	R	R
28 COND. CABLE	SIGNAL CIRCUITS	1	1	1	1			
#10	LUMINAIRES	2	2		2			
#10	RECEPTACLES	2	2		2			
#2	SERVICE					3		3
SIC	INTERCONNECT				2		2	

N Denote new conduit or conductors to be furnished and installed.
X Denotes existing conduit to be extended/rerouted to new pull box/foundation.
R Denotes existing conduit or conductors to be removed and replaced with new condustors.
See General Signal Notes & Special Provisions.
The contractor shall verify all existing conduit sizes. See General Signal Notes & Special Provisions.

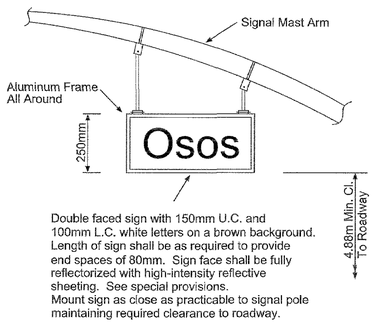

NISNS DETAIL

NTS

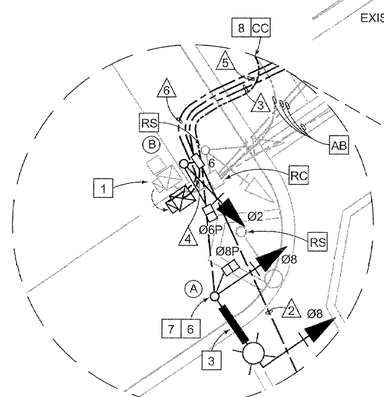

DETAIL SCALE = 1 : 100

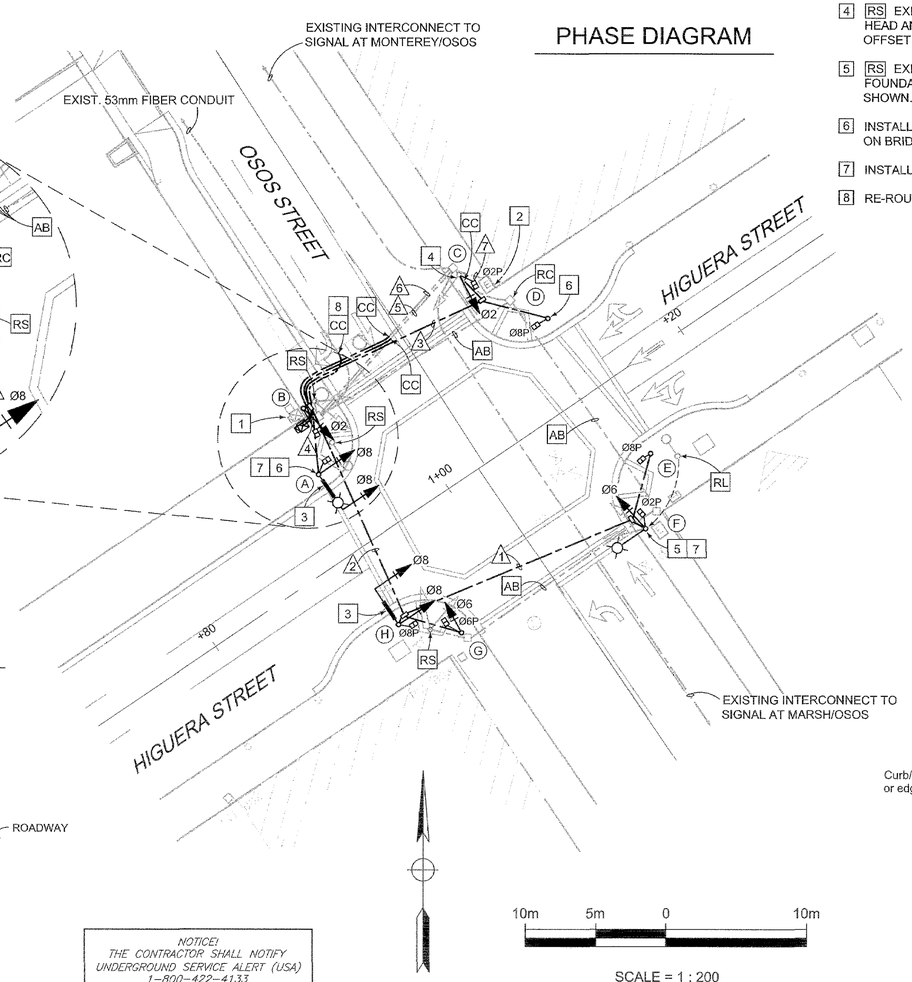

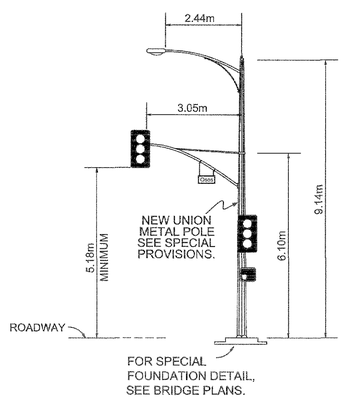

SPECIAL 'A'

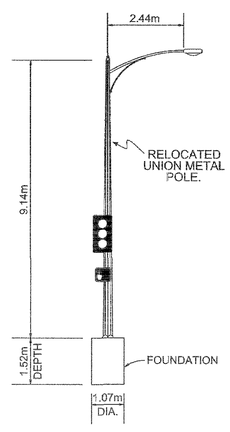

SPECIAL 'B'

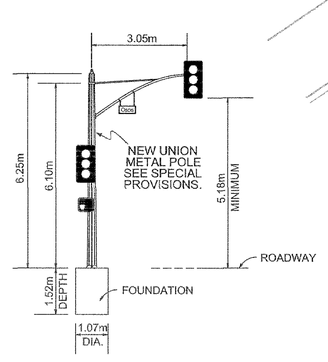

SPECIAL 'C'

SPECIAL POLE DETAILS

NTS

NOTICE!
THE CONTRACTOR SHALL NOTIFY UNDERGROUND SERVICE ALERT (USA) 1-800-422-4133 NOT LESS THAN 2 WORKING DAYS PRIOR TO START OF CONSTRUCTION

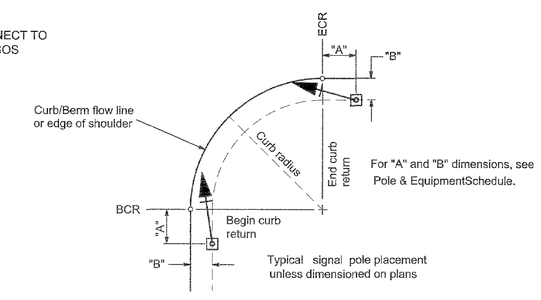

SIGNAL STANDARD PLACEMENT DIMENSIONS AND EQUIPMENT LOCATIONS

city of san luis obispo

HIGUERA STREET BRIDGE REPLACEMENT

APPROVED BY
CITY ENGINEER

DATE	3/2000
SCALE	1:200
DESIGNED BY	MCD
DRAWN BY	MCD
CHECKED BY	MKF
APPROVED BY	UTILITIES DEPARTMENT

TRAFFIC SIGNAL AND LIGHTING PLAN
HIGUERA STREET / OSOS STREET

SPECIFICATION NO. 9367
FILE NO./LOCATION 0060 B
SHEET 13 OF 41

DIST	COUNTY	ROUTE	KILOMETER POST TOTAL PROJECT	SHEET NO.	TOTAL SHEETS
05	SLO	-	-	13	38

REGISTERED CIVIL ENGINEER

PLANS APPROVAL DATE

REGISTERED PROFESSIONAL ENGINEER M.K. FRANKLIN No. 15487 Exp. 3/31/01 CIVIL STATE OF CALIFORNIA

ASSOCIATED TRANSPORTATION ENGINEERS
100 N. Hope Ave, Suite 4
Santa Barbara, CA 93110

GENERAL SIGNAL NOTES

1. ALL SIGNAL AND LIGHTING WORK SHALL CONFORM TO THE STATE 0F CALIFORNIA DEPARTMENT OF TRANSPORTATION STANDARD SPECIFICATIONS AND STANDARD PLANS DATED JULY 1999 (METRIC), AND THE SPECIAL PROVISIONS ACCOMPANYING THIS PLAN.
2. THE CONTRACTOR SHALL MAINTAIN EXISTING LIGHTING CIRCUITS DURING CONSTRUCTION, EXCEPT AS DIRECTED BY THE ENGINEER. SEE SPECIAL PROVISIONS.
3. ALL VEHICLE SIGNAL HEADS SHALL BE 300mm AND SHALL HAVE BACKPLATES.
4. THE LOCATIONS OF ALL ELECTRICAL EQUIPMENT TO BE INSTALLED BY THE CONTRACTOR SHALL BE APPROVED BY THE ENGINEER PRIOR TO CONSTRUCTION.
5. BONDING AND GROUNDING CONDUCTORS REQUIRED BY THE NATIONAL ELECTRICAL CODE AND BY THE STANDARD SPECIFICATIONS ARE NOT SHOWN ON CONDUCTOR SCHEDULES. THE CONTRACTOR SHALL ENSURE THAT THE ENTIRE MODIFIED SIGNAL AND LIGHTING SYSTEMS ARE BONDED AND GROUNDED AS REQUIRED BY THE STANDARD SPECIFICATIONS AND THE CODE.
6. IN ADDITION TO THE STANDARD ABBREVIATIONS ON STANDARD PLAN ES-1A, NISNS INDICATES NON-ILLUMINATED STREET NAME SIGN.
7. THE CONTRACTOR SHALL VERIFY THE SIZE AND SUITABILITY FOR USE OF ALL EXISTING CONDUITS TO BE REUSED. THE CONTRACTOR SHALL IMMEDIATELY NOTIFY THE ENGINEER IF ANY EXISTING CONDUIT IS FOUND TO BE UNSATISFACTORY FOR USE.
8. CONDUITS INSTALLED IN STRUCTURES SHALL CONFORM TO THE DETAILS SHOWN ON THE STRUCTURES PLANS.

POLE & EQUIPMENT SCHEDULE

LOC	STANDARDS TYPE	STANDARDS SIG. M.A.	STANDARDS L.M.A.	STANDARDS M.A.	VEH. SIG. MTG. POLE	PED. SIG. MOUNTING	HPS LUMINAIRE	NISNS LEGEND FRONT	NISNS LEGEND BACK	LOCATION A	LOCATION B	REMARKS
A	Special 'A'	3.05m	2.44m	MAS	SV-1-T	SP-1-T	200 W	Osos	Osos	0.35m	1.00m	ALL NEW 3 6 7
B	1-A-3.05m	-	-	-	TV-1-T	SP-1-T	-	-	-	1.97m	2.20m	ALL NEW
C	1-A-3.05m(E)	-	-	-	TV-1-T(N)	SP-1-T(N)	-	-	-	EXISTING		EXIST. POLE, NEW SIGNALS 4
D	1-A-2.13m	-	-	-	-	TP-1-T	-	-	-	0.27m	1.00m	ALL NEW 6
E	1-A-2.13m	-	-	-	-	TP-1-T	-	-	-	0.00m	1.00m	ALL NEW
F	Special 'B'	-	2.44m	-	SV-1-T	SP-1-T	200 W	-	-	1.19m	0.67m	RL EXIST. POLE, NEW SIGNALS 5 7
G	1-A-3.05m	-	-	-	TV-1-T	SP-1-T	-	-	-	0.00m	1.00m	ALL NEW
H	Special 'C'	3.05m	-	MAS	SV-1-T	SP-1-T	-	Osos	Osos	0.39m	1.00m	ALL NEW 3

After locating standard per dimensions noted above, ensure compliance with General Note 4. For "A" and "B" dimensions see detail this sheet.
Red vehicle indications and Portland Orange Don't Walk symbols shall be LED. See Special Provisions.
For Special Poles (A) (B) & (C), see details this sheet and special provisions.
All poles and mast arms shall be painted "Slate Green" per City Standards.

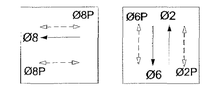

PHASE DIAGRAM

INSTALLATION NOTES

1. RELOCATE EXISTING MODEL 170 CONTROLLER ASSEMBLY, MODEL 303 CABINET AND PEDESTAL, AND TYPE II SERVICE EQUIPMENT ENCLOSURE TO NEW LOCATION AT BACK OF SIDEWALK, WITHIN RIGHT OF WAY. RC CONDUITS TO EXISTING SERVICE AND CONTROLLER, AND INSTALL OR EXTEND CONDUITS TO NEW LOCATION AS SHOWN.
2. EXISTING PG&E SERVICE POINT AT PG&E HAND HOLE.
3. FURNISH AND INSTALL NISNS ON SIGNAL MAST ARM PER DETAIL THIS SHEET. SEE SPECIAL PROVISIONS. LEGEND SHALL BE AS SHOWN ON POLE & EQUIPMENT SCHEDULE.
4. RS EXISTING SIGNAL HEADS AND TV-2-T MOUNTING. FURNISH AND INSTALL SIGNAL HEAD AND TV-1-T MOUNTING, PEDESTRIAN HEAD AND SP-1-T MOUNTING, AS SHOWN. OFFSET VEHICLE SIGNAL HEAD AWAY FROM CURB LINE.
5. RS EXISTING TYPE 1-A POLE AND SIGNAL EQUIPMENT. REMOVE EXISTING FOUNDATION. RL EXISTING SPECIAL TYPE B ELECTROLIER TO NEW LOCATION SHOWN. INSTALL VEHICLE AND PEDESTRIAN SIGNAL HEADS ON POLE AS SHOWN.
6. INSTALL SIGNAL POLE ON SPECIAL FOUNDATION ON BRIDGE STRUCTURE AS SHOWN ON BRIDGE PLANS. (SEE "ABUTMENT DETAILS NO.2" SHEET.)
7. INSTALL DUPLEX RECEPTACLE IN WEATHER PROOF BOX AT TOP OF POLE.
8. RE-ROUTE EXISTING 53mm FIBER CONDUIT TO NEW PULL BOX LOCATION.

CONDUIT AND CONDUCTOR SCHEDULE

		CONDUIT RUN AND SIZE						
AWG or CABLE	CIRCUIT	1	2	3	4	5	6	7
		78	78	78	78	53	41	53
	CONDUIT	N	N	N	N	X	X	X
	CONDUCTORS	N	N	N	N	R	R	R
28 COND. CABLE	SIGNAL CIRCUITS	1	1	1	1			
#10	LUMINAIRES	2	2		2			
#10	RECEPTACLES	2	2		2			
#2	SERVICE					3		3
SIC	INTERCONNECT				2		2	

N Denote new conduit or conductors to be furnished and installed.
X Denotes existing conduit to be extended/rerouted to new pull box/foundation.
R Denotes existing conduit or conductors to be removed and replaced with new condustors. See General Signal Notes & Special Provisions.
The contractor shall verify all existing conduit sizes. See General Signal Notes & Special Provisions.

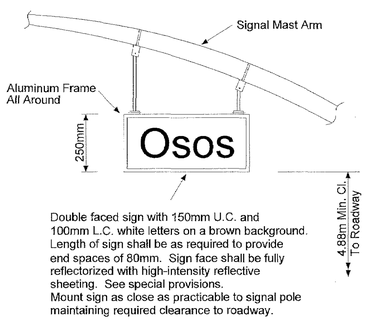

NISNS DETAIL

NTS

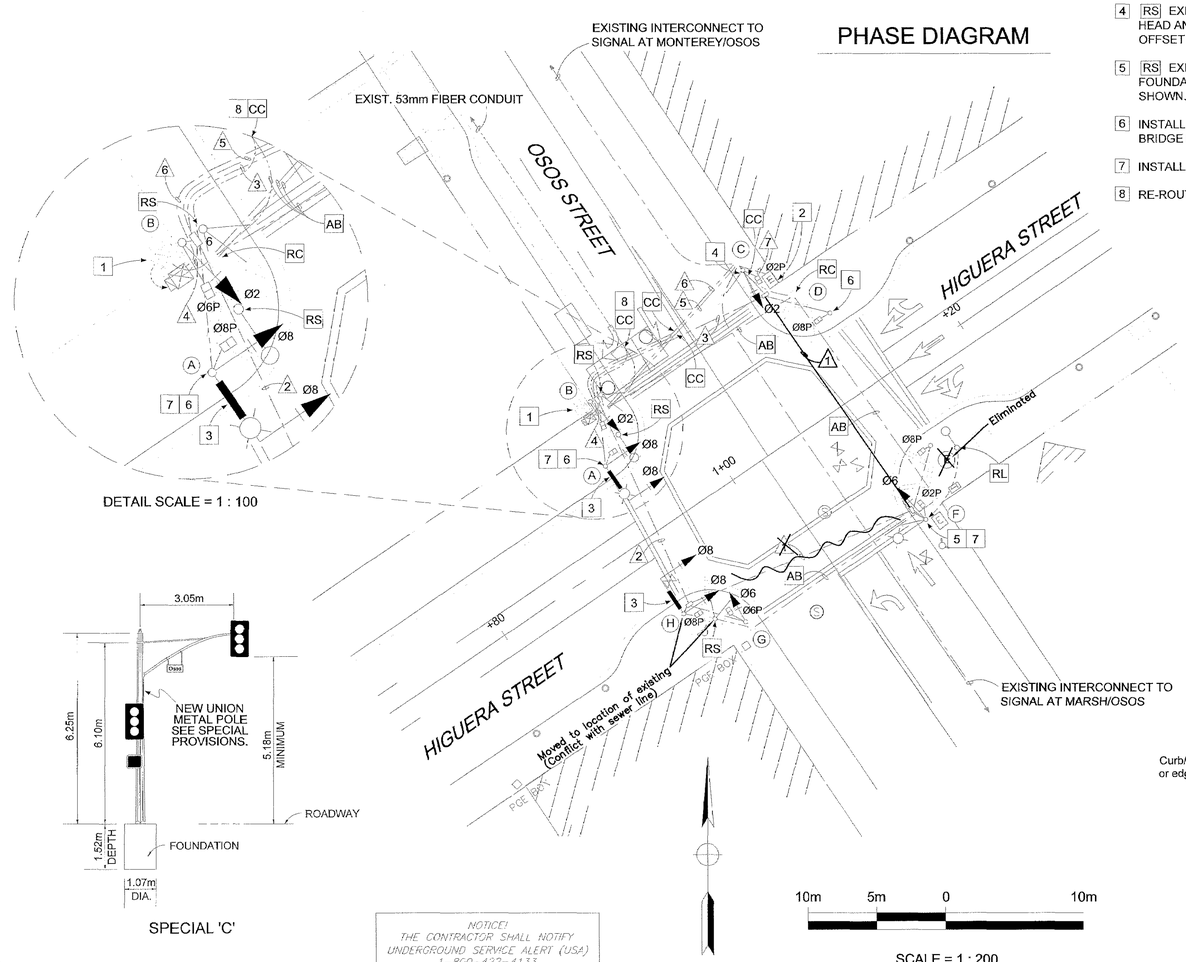

DETAIL SCALE = 1 : 100

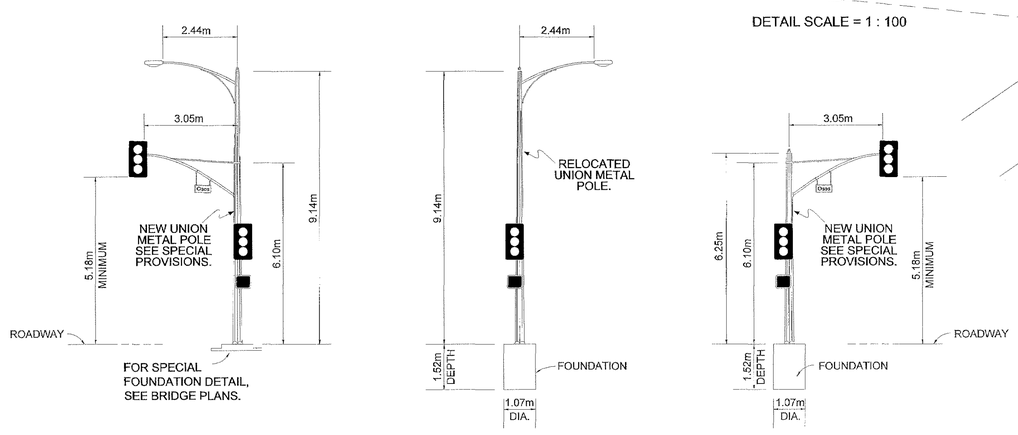

SPECIAL POLE DETAILS

NTS

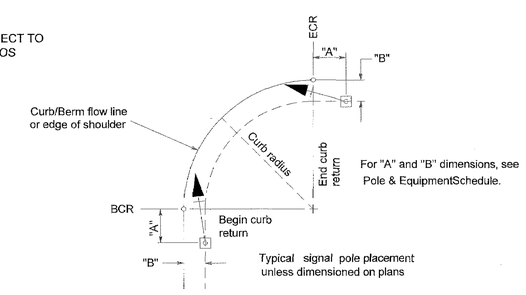

SIGNAL STANDARD PLACEMENT DIMENSIONS AND EQUIPMENT LOCATIONS

NOTICE!
THE CONTRACTOR SHALL NOTIFY UNDERGROUND SERVICE ALERT (USA) 1-800-422-4133 NOT LESS THAN 2 WORKING DAYS PRIOR TO START OF CONSTRUCTION

RECORD DRAWING DATE: 2/27/02 BY: SR

city of san luis obispo

HIGUERA STREET BRIDGE REPLACEMENT

APPROVED BY

CITY ENGINEER

DATE	3/2000
SCALE	1:200
DESIGNED BY	MCD
DRAWN BY	MCD
CHECKED BY	MKF
APPROVED BY	
UTILITIES DEPARTMENT	

TRAFFIC SIGNAL AND LIGHTING PLAN
HIGUERA STREET / OSOS STREET

SPECIFICATION NO. 9367

FILE NO./LOCATION Osos B

SHEET 13R OF 41

DIST	COUNTY	ROUTE	POST MILES TOTAL PROJECT	SHEET NO.	TOTAL SHEETS
5	SLO		–	14	41

REGISTERED CIVIL ENGINEER

4/6/2000
PLANS APPROVAL DATE

REGISTERED PROFESSIONAL ENGINEER
Ann Conner Olson
No. C034496
EXP. 9/30/03
CIVIL
STATE OF CALIFORNIA

MARTIN & KANE, Inc.
2200-B DOUGLAS BLVD. #150
ROSEVILLE • CA 95661

NOTES:

[1] USE MOIFIED CALTRANS DETAIL 9 (WITH TYPE C RED-CLEAR REFLECTORS IN LIEU OF TYPE G ONE-WAY CLEAR REFLECTORS).

GENERAL NOTES:

1. EXACT LOCATION AND COLOR OF CURBS SHALL BE DETERMINED BY THE ENGINEER.
2. EXACT LOCATIONS OF PAVEMENT MARKINGS TO BE DETERMINED BY THE ENGINEER.

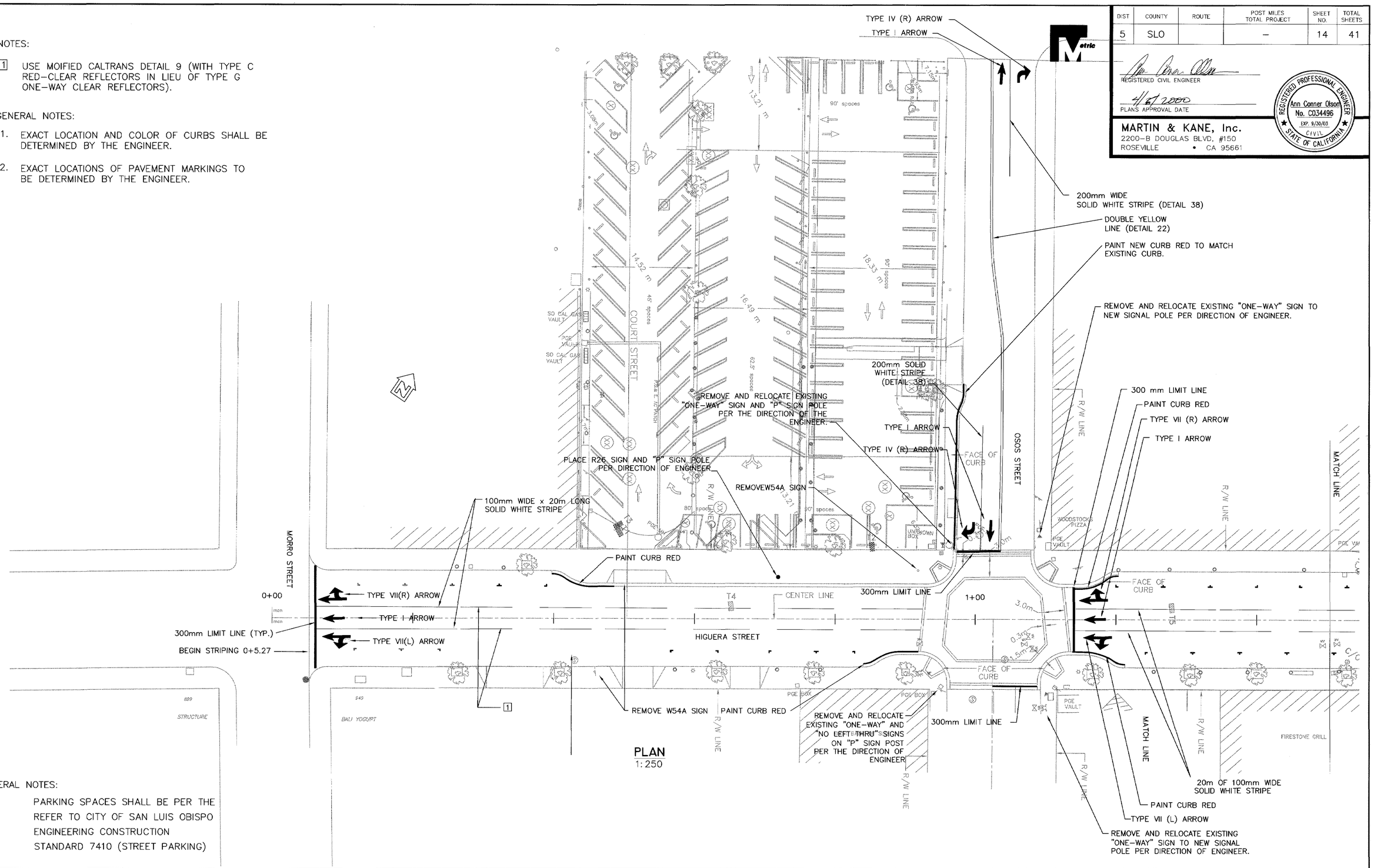

GENERAL NOTES:

PARKING SPACES SHALL BE PER THE REFER TO CITY OF SAN LUIS OBISPO ENGINEERING CONSTRUCTION STANDARD 7410 (STREET PARKING)

CITY OF SAN LUIS OBISPO

HIGUERA STREET BRIDGE REPLACEMENT

FOR REDUCED PLANS ORIGINAL SCALE IS IN MILLIMETERS 0 20 40 60 80 100

APPROVED BY
CITY ENGINEER

DATE	3/2000
SCALE	1:250
DESIGNED BY	A.C.
DRAWN BY	K.B.
CHECKED BY	R.C.
APPROVED BY	UTILITIES DEPARTMENT

SIGNING & STRIPING PLAN NO. 1

SPECIFICATION NO. 9367
FILE NO./LOCATION 0060 B
SHEET 14 OF 41

N:\MKSR\R1\MK PROJECTS\1997\97017.00 HIGUERA STREET BRIDGE REHAB\DRAWINGS\100% Submittal\97017-SP.dwg 3-17-00

DIST	COUNTY	ROUTE	POST MILES TOTAL PROJECT	SHEET NO.	TOTAL SHEETS
5	SLO		–	14	41

REGISTERED CIVIL ENGINEER

PLANS APPROVAL DATE

REGISTERED PROFESSIONAL ENGINEER
Ann Conner Olson
No. C034496
EXP. 9/30/03
CIVIL
STATE OF CALIFORNIA

MARTIN & KANE, Inc.
2200-B DOUGLAS BLVD, #150
ROSEVILLE • CA 95661

NOTES:

1. USE MOIFIED CALTRANS DETAIL 9 (WITH TYPE C RED-CLEAR REFLECTORS IN LIEU OF TYPE G ONE-WAY CLEAR REFLECTORS).

GENERAL NOTES:

1. EXACT LOCATION AND COLOR OF CURBS SHALL BE DETERMINED BY THE ENGINEER.
2. EXACT LOCATIONS OF PAVEMENT MARKINGS TO BE DETERMINED BY THE ENGINEER.

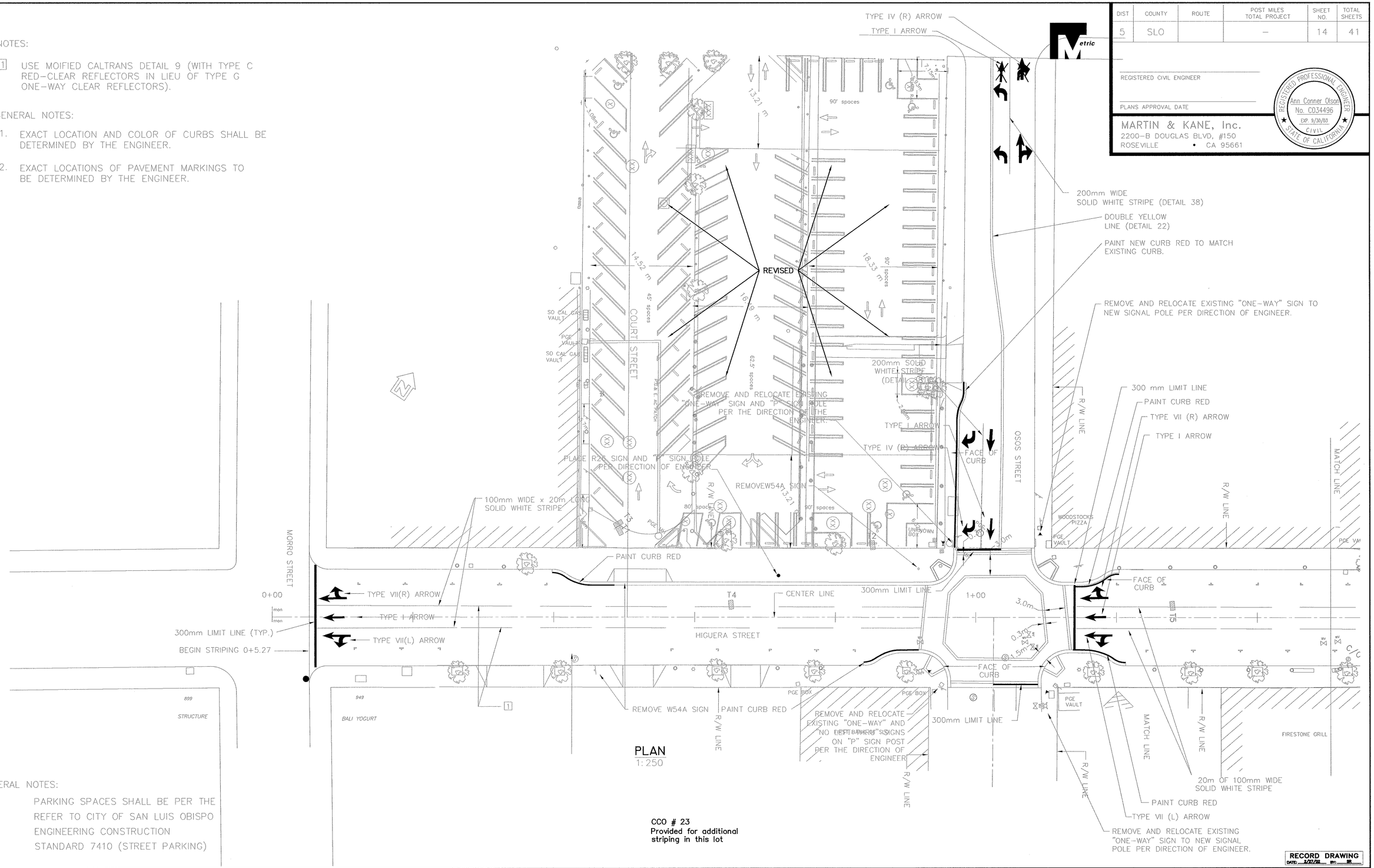

GENERAL NOTES:

PARKING SPACES SHALL BE PER THE REFER TO CITY OF SAN LUIS OBISPO ENGINEERING CONSTRUCTION STANDARD 7410 (STREET PARKING)

CCO # 23
Provided for additional striping in this lot

RECORD DRAWING
DATE 8/27/08 BY: RR

N:\WKSPVR1\MK PROJECTS\1997\97017.00 HIGUERA STREET BRIDGE REHAB\DRAWINGS\100% Submittal\97017-SP.dwg 3-17-00

city of san luis obispo

HIGUERA STREET BRIDGE REPLACEMENT

FOR REDUCED PLANS ORIGINAL SCALE IS IN MILLIMETERS 0 20 40 60 80 100

APPROVED BY

CITY ENGINEER

DATE	3/2000
SCALE	1:250
DESIGNED BY	A.O.
DRAWN BY	K.B.
CHECKED BY	R.C.
APPROVED BY	
UTILITIES DEPARTMENT	

SIGNING & STRIPING PLAN NO. 1

SPECIFICATION NO. 9367

FILE NO./LOCATION 0060 B

SHEET 14R OF 41

DIST	COUNTY	ROUTE	POST MILES TOTAL PROJECT	SHEET NO.	TOTAL SHEETS
5	SLO		–	15	41

REGISTERED CIVIL ENGINEER

4/5/2000
PLANS APPROVAL DATE

REGISTERED PROFESSIONAL ENGINEER
Ann Conner Olson
No. C034496
EXP. 9/30/03
CIVIL
STATE OF CALIFORNIA

MARTIN & KANE, Inc.
2200-B DOUGLAS BLVD. #150
ROSEVILLE • CA 95661

NOTES:

[1] USE MOIFIED CALTRANS DETAIL 9 (WITH TYPE C RED-CLEAR REFLECTORS IN LIEU OF TYPE G ONE-WAY CLEAR REFLECTORS).

GENERAL NOTES:

1. EXACT LOCATION AND COLOR OF CURBS SHALL BE DETERMINED BY THE ENGINEER.
2. EXACT LOCATIONS OF PAVEMENT MARKINGS TO BE DETERMINED BY THE ENGINEER.

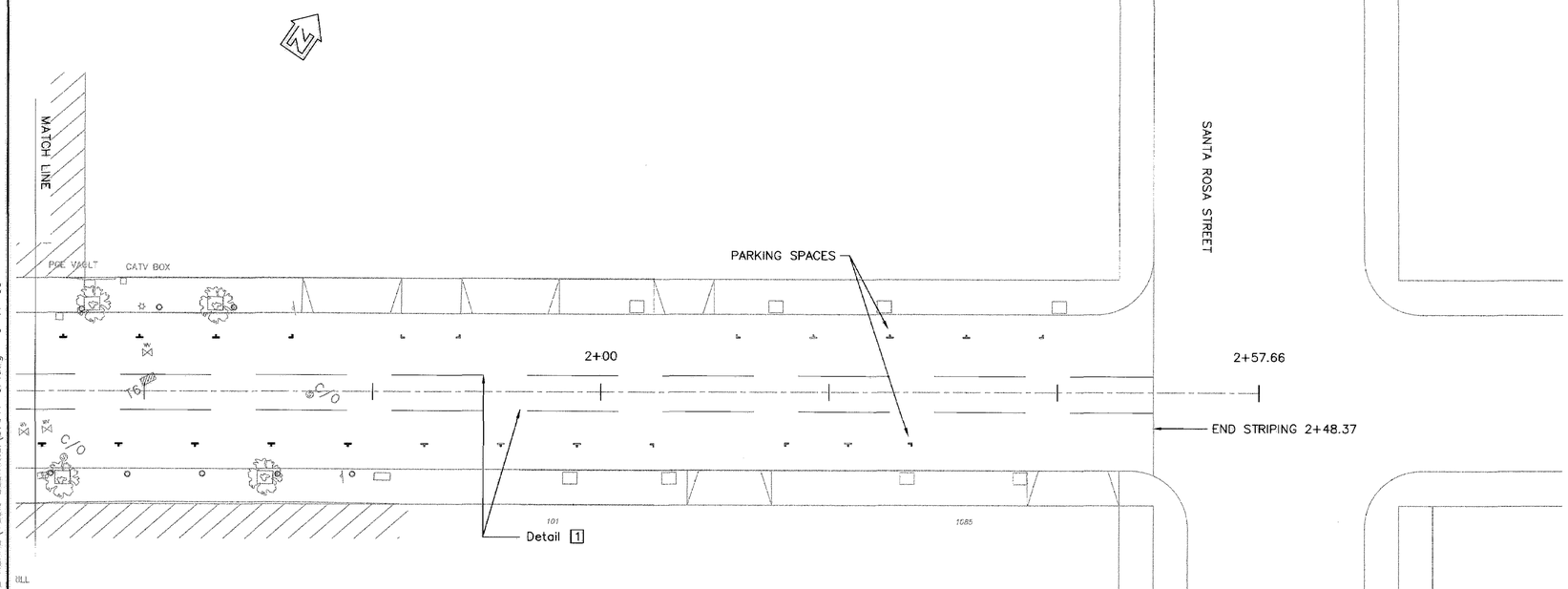

PLAN
1:250

GENERAL NOTES:

PARKING SPACES SHALL BE PER THE CITY OF SAN LUIS OBISPO ENGINEERING CONSTRUCTION STANDARD 7410 (STREET PARKING)

N:\MKSR\R1\MK PROJECTS\1997\97017.00 HIGUERA STREET BRIDGE REHAB\100% Submittal\97017-SP.dwg 3-17-00

CITY OF SAN LUIS OBISPO

HIGUERA STREET BRIDGE REPLACEMENT

FOR REDUCED PLANS ORIGINAL SCALE IS IN MILLIMETERS 0 20 40 60 80 100

APPROVED BY

CITY ENGINEER

DATE	3/2000
SCALE	1:250
DESIGNED BY	A.O.
DRAWN BY	K.B.
CHECKED BY	R.C.
APPROVED BY	
UTILITIES DEPARTMENT	

SIGNING & STRIPING PLAN NO. 2

SPECIFICATION NO. 9367

FILE NO./LOCATION 0060 B

SHEET 15 OF 41

DIST	COUNTY	ROUTE	POST MILES TOTAL PROJECT	SHEET NO.	TOTAL SHEETS
5	SLO		–	16	41

REGISTERED CIVIL ENGINEER

4/5/2000
PLANS APPROVAL DATE

REGISTERED PROFESSIONAL ENGINEER
Ann Conner Olson
No. C034496
EXP. 9/30/03
CIVIL
STATE OF CALIFORNIA

MARTIN & KANE, Inc.
2200-B DOUGLAS BLVD, #150
ROSEVILLE • CA 95661

CONSTRUCTION AREA SIGNS

TYPE	PANEL SIZE	EACH	REMARKS
Ⓐ C19	1200mm x 1200mm	3	MOUNT ON POST
Ⓑ C1	1200mm x 1200mm	3	MOUNT ON POST
Ⓒ C5 (L)	1200mm x 450mm	4	MOUNT ON POST
Ⓓ R17B	750mm x 900mm	4	MOUNT ON POST
Ⓔ R16B	750mm x 900mm	2	MOUNT ON POST
Ⓕ C7	750mm x 600mm	3	MOUNT ON POST
Ⓖ C2	1200mm x 750mm	3	(ON BARRIER)
Ⓗ C3A	1500mm x 750mm	8	(4 ON BARRIER, 4 ON POST)
Ⓘ C5 (R)	1200mm x 450mm	8	(4 ON BARRIER, 4 ON POST)
Ⓙ C14	1200mm x 600mm	4	MOUNT ON POST
Ⓚ C23	1200mm x 1200mm	3	MOUNT ON POST
Ⓛ G7-1 (MODIFIED)	400mm x 150mm	2	HIGUERA STREET MOUNT ON POST

NOTES:

1 CONTRACTOR SHALL PLACE CALTRANS STANDARD PLAN A73 TYPE III BARRICADES ACROSS ENTIRE WIDTH OF STREET OR DRIVEWAY. SIGN C2 SHALL BE ATTACHED TO THE MIDDLE OF THE BARRICADE.

2 CONTRACTOR SHALL PLACE CALTRANS STANDARD PLAN A73 STAGGERED TYPE III BARRICADES ACROSS WIDTH OF STREET TO ALLOW FOR LOCAL TRAFFIC MOVEMENT (INCLUDING PROVIDING ACCESS TO LOADING ZONES FOR LOCAL BUSINESSES). SIGNS C3A AND C5 (R) SHALL BE ATTACHED TO THE CENTER OF THE BARRICADE.

GENERAL NOTES:

ALL SIGNS SHOWN ON THIS PLAN, EXCEPT FOR THOSE MOUNTED ON BARRICADES, SHALL BE MAINTAINED ONLY AS LONG AS DETOUR OR ROAD CONSTRUCTION IS IN EFFECT. WHEN THE SIGNS ARE NO LONGER NEEDED, THEY WILL BE COMPLETELY COVERED OR REMOVED BY THE CONTRACTOR.

ALL TEMPORARY SIGNS ON THIS PLAN INTENDED FOR NIGHTTIME USE SHALL HAVE REFLECTORIZED BACKGROUND AND/OR LEGEND AND BORDER DEPENDING ON THE STANDARDS FOR THAT PARTICULAR SIGN.

LEGEND:

PLACE CONSTRUCTION AREA SIGN (AS SHOWN). EXACT SIGN LOCATIONS, AND TIMING OF PLACEMENT, TO BE DETERMINED BY THE RESIDENT ENGINEER.

PLACE CALTRANS STANDARD PLAN A73 TEMPORARY TYPE III BARRICADE WITH TEMPORARY SIGN (AS SHOWN)

city of san luis obispo

HIGUERA STREET BRIDGE REPLACEMENT

APPROVED BY

CITY ENGINEER

DATE	3/2000
SCALE	NONE
DESIGNED BY	C. EBELING
DRAWN BY	C. EBELING
CHECKED BY	A. OLSON
APPROVED BY	
UTILITIES DEPARTMENT	

TRAFFIC DETOUR PLAN
HIGUERA STREET CLOSED
OSOS STREET CLOSED

SPECIFICATION NO. 9367

FILE NO./LOCATION 0060 B

SHEET 16 OF 41

DIST	COUNTY	ROUTE	POST MILES TOTAL PROJECT	SHEET NO.	TOTAL SHEETS
5	SLO		–	17	41

REGISTERED CIVIL ENGINEER

4/5/2000
PLANS APPROVAL DATE

REGISTERED PROFESSIONAL ENGINEER
Ann Conner Olson
No. C034496
EXP. 9/30/03
CIVIL
STATE OF CALIFORNIA

MARTIN & KANE, Inc.
2200-B DOUGLAS BLVD. #150
ROSEVILLE • CA 95661

CONSTRUCTION AREA SIGNS

TYPE	PANEL SIZE	EACH	REMARKS
Ⓐ C19	1200mm x 1200mm	2	MOUNT ON POST
Ⓑ C1	1200mm x 1200mm	1	MOUNT ON POST
Ⓒ C5 (L)	1200mm x 450mm	3	MOUNT ON POST
Ⓓ R17B	750mm x 900mm	3	MOUNT ON POST
Ⓔ R16B	750mm x 900mm	2	MOUNT ON POST
Ⓕ C7	750mm x 600mm	1	MOUNT ON POST
Ⓖ C2	1200mm x 750mm	3	(ON BARRIER)
Ⓗ C3A	1500mm x 750mm	4	(2 ON BARRIER, 2 ON POST)
Ⓘ C5 (R)	1200mm x 450mm	4	(2 ON BARRIER, 2 ON POST)
Ⓙ C14	1200mm x 600mm	1	MOUNT ON POST
Ⓚ C23	1200mm x 1200mm	3	MOUNT ON POST
Ⓛ G7-1 (MODIFIED)	400mm x 150mm	4	HIGUERA STREET MOUNT ON POST
Ⓜ G36	400mm x 280mm	1	MOUNT ON POST
Ⓝ C5A	1200mm x 450mm	1	MOUNT ON POST

NOTES:

1 CONTRACTOR SHALL PLACE CALTRANS STANDARD PLAN A73 TYPE III BARRICADES ACROSS ENTIRE WIDTH OF STREET OR DRIVEWAY. SIGN C2 SHALL BE ATTACHED TO THE MIDDLE OF THE BARRICADE.

2 CONTRACTOR SHALL PLACE CALTRANS STANDARD PLAN A73 STAGGERED TYPE III BARRICADES ACROSS WIDTH OF STREET TO ALLOW FOR LOCAL TRAFFIC MOVEMENT (INCLUDING PROVIDING ACCESS TO LOADING ZONES FOR LOCAL BUSINESSES). SIGNS C3A AND C5 (R) SHALL BE ATTACHED TO THE CENTER OF THE BARRICADE.

GENERAL NOTES:

ALL SIGNS SHOWN ON THIS PLAN, EXCEPT FOR THOSE MOUNTED ON BARRICADES, SHALL BE MAINTAINED ONLY AS LONG AS DETOUR OR ROAD CONSTRUCTION IS IN EFFECT. WHEN THE SIGNS ARE NO LONGER NEEDED, THEY WILL BE COMPLETELY COVERED OR REMOVED BY THE CONTRACTOR.

ALL TEMPORARY SIGNS ON THIS PLAN INTENDED FOR NIGHTTIME USE SHALL HAVE REFLECTORIZED BACKGROUND AND/OR LEGEND AND BORDER DEPENDING ON THE STANDARDS FOR THAT PARTICULAR SIGN.

LEGEND:

PLACE CONSTRUCTION AREA SIGN (AS SHOWN). EXACT SIGN LOCATIONS, AND TIMING OF PLACEMENT, TO BE DETERMINED BY THE RESIDENT ENGINEER.

PLACE CALTRANS STANDARD PLAN A73 TEMPORARY TYPE III BARRICADE WITH TEMPORARY SIGN (AS SHOWN)

city of san luis obispo

HIGUERA STREET BRIDGE REPLACEMENT

APPROVED BY

CITY ENGINEER

DATE	3/2000
SCALE	NONE
DESIGNED BY	C. EBELING
DRAWN BY	C. EBELING
CHECKED BY	A. OLSON
APPROVED BY	
UTILITIES DEPARTMENT	

TRAFFIC DETOUR PLAN
HIGUERA STREET CLOSED
OSOS STREET OPEN

SPECIFICATION NO. 9367

FILE NO./LOCATION 0060 B

SHEET 17 OF 41

DIST	COUNTY	ROUTE	POST MILES TOTAL PROJECT	SHEET NO.	TOTAL SHEETS
5	SLO		–	18	41

REGISTERED CIVIL ENGINEER

4/5/2000
PLANS APPROVAL DATE

REGISTERED PROFESSIONAL ENGINEER
Ann Conner Olson
No. C034496
EXP. 9/30/03
CIVIL
STATE OF CALIFORNIA

MARTIN & KANE, Inc.
2200-B DOUGLAS BLVD, #150
ROSEVILLE • CA 95661

CONSTRUCTION AREA SIGNS

TYPE	PANEL SIZE	EACH	REMARKS
Ⓐ C19	1200mm x 1200mm	2	MOUNT ON POST
Ⓑ C1	1200mm x 1200mm	2	MOUNT ON POST
Ⓒ C5 (L)	1200mm x 450mm	7	(2 ON BARRIER, 5 ON POST)
Ⓓ R17B	750mm x 900mm	1	MOUNT ON POST
Ⓔ R16B	750mm x 900mm	2	MOUNT ON POST
Ⓕ C7	750mm x 600mm	2	MOUNT ON POST
Ⓖ C2	1200mm x 750mm	4	1 ON POST, 1 ON BARRICADE 2 ON K-RAIL
Ⓗ C3A	1500mm x 750mm	2	1 ON POST 1 ON BARRICADE
Ⓘ C5 (R)	1200mm x 450mm	5	4 ON POST 1 ON BARRICADE
Ⓙ C14	1200mm x 600mm	2	MOUNT ON POST
Ⓚ C23	1200mm x 1200mm	5	MOUNT ON POST
Ⓛ G7-1 (MODIFIED)	400mm x 150mm	0	HIGUERA STREET MOUNT ON POST

NOTES:

1. CONTRACTOR SHALL PLACE CALTRANS STANDARD PLAN A73 TYPE III BARRICADES ACROSS ENTIRE WIDTH OF STREET OR DRIVEWAY. SIGN C2 SHALL BE ATTACHED TO THE MIDDLE OF THE BARRICADE.

2. CONTRACTOR SHALL PLACE CALTRANS STANDARD PLAN A73 STAGGERED TYPE III BARRICADES ACROSS WIDTH OF STREET TO ALLOW FOR LOCAL TRAFFIC MOVEMENT (INCLUDING PROVIDING ACCESS TO LOADING ZONES FOR LOCAL BUSINESSES). SIGNS C3A AND C5 (R) SHALL BE ATTACHED TO THE CENTER OF THE BARRICADE.

3. TEMPORARY K-RAIL TO BE PLACED WHEN OSOS IS CLOSED (WITH C2 SIGNS). SEE STAGE 1 TRAFFIC STAGING PLANS FOR DETAILS.

GENERAL NOTES:

ALL SIGNS SHOWN ON THIS PLAN, EXCEPT FOR THOSE MOUNTED ON BARRICADES, SHALL BE MAINTAINED ONLY AS LONG AS DETOUR OR ROAD CONSTRUCTION IS IN EFFECT. WHEN THE SIGNS ARE NO LONGER NEEDED, THEY WILL BE COMPLETELY COVERED OR REMOVED BY THE CONTRACTOR.

ALL TEMPORARY SIGNS ON THIS PLAN INTENDED FOR NIGHTTIME USE SHALL HAVE REFLECTORIZED BACKGROUND AND/OR LEGEND AND BORDER DEPENDING ON THE STANDARDS FOR THAT PARTICULAR SIGN.

LEGEND:

- PLACE CONSTRUCTION AREA SIGN (AS SHOWN). EXACT SIGN LOCATIONS, AND TIMING OF PLACEMENT, TO BE DETERMINED BY THE RESIDENT ENGINEER.

- PLACE CALTRANS STANDARD PLAN A73 TEMPORARY TYPE III BARRICADE WITH TEMPORARY SIGN (AS SHOWN)

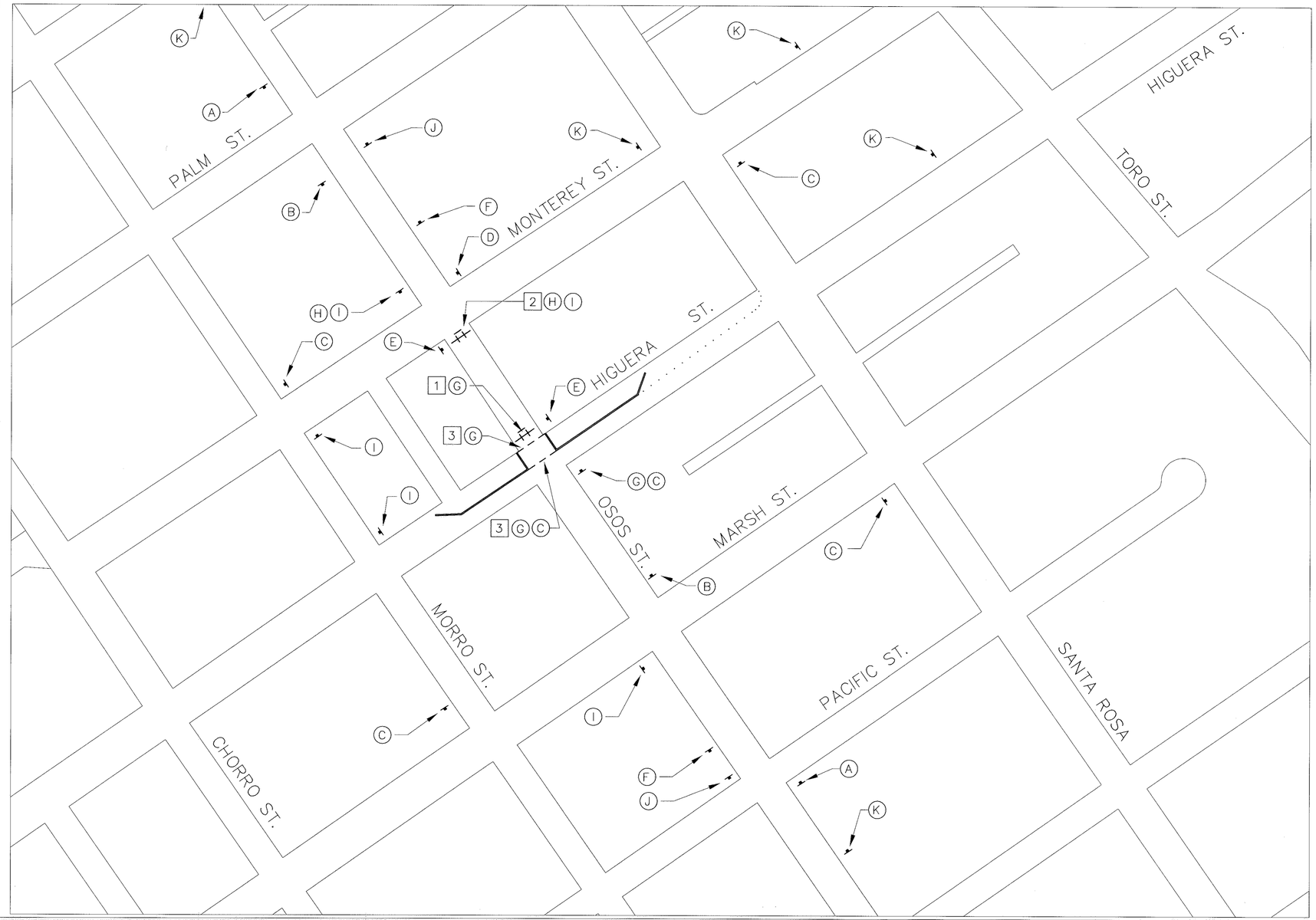

city of san luis obispo

HIGUERA STREET BRIDGE REPLACEMENT

APPROVED BY
CITY ENGINEER

DATE	3/2000
SCALE	NONE
DESIGNED BY	C. EBELING
DRAWN BY	C. EBELING
CHECKED BY	A. OLSON
APPROVED BY	
UTILITIES DEPARTMENT	

TRAFFIC DETOUR PLAN
HIGUERA STREET OPEN
OSOS STREET CLOSED

SPECIFICATION NO. 9367
FILE NO./LOCATION 6060 B
SHEET 18 OF 41

DIST	COUNTY	ROUTE	POST MILES TOTAL PROJECT	SHEET NO.	TOTAL SHEETS
5	SLO		–	19	41

REGISTERED CIVIL ENGINEER

4/5/2000
PLANS APPROVAL DATE

REGISTERED PROFESSIONAL ENGINEER
Ann Conner Olson
No. C034496
EXP. 9/30/03
CIVIL
STATE OF CALIFORNIA

MARTIN & KANE, Inc.
2200-B DOUGLAS BLVD, #150
ROSEVILLE • CA 95661

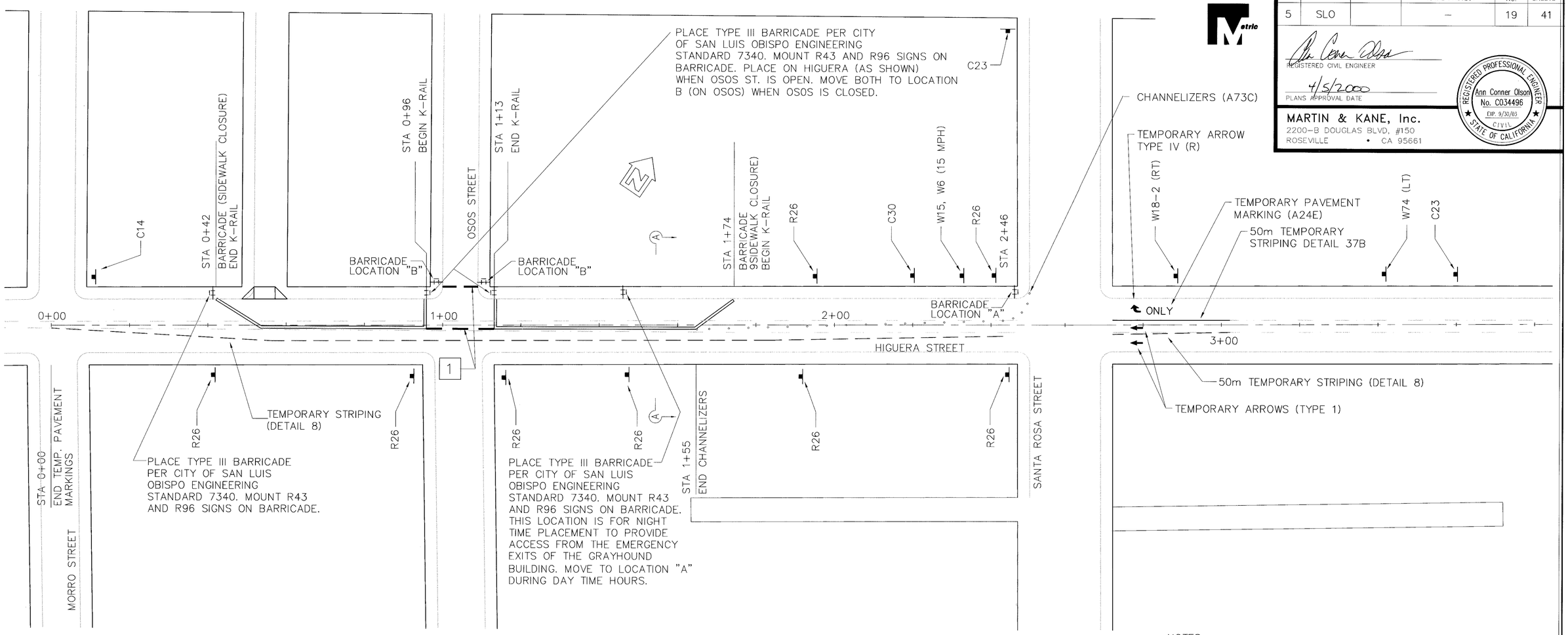

PLAN
Scale: 1:500

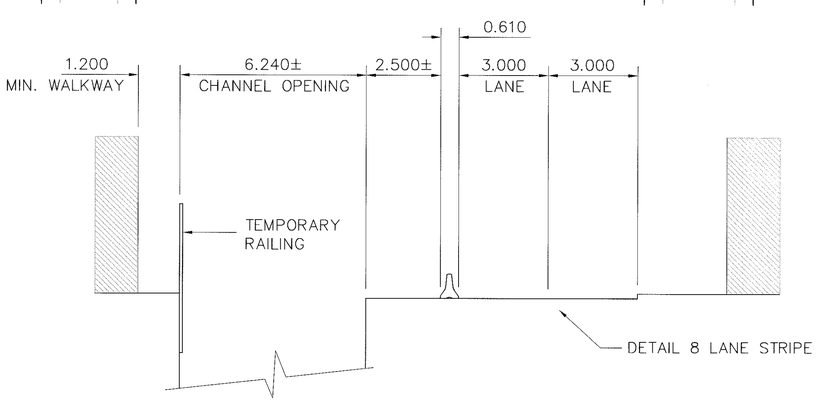

SECTION A-A
Scale: 1:100

NOTES:

1 PLACE TEMPORARY K-RAIL DURING CLOSURE OF OSOS STREET. MOUNT C2 SIGNS ON THE K-RAIL BARRICADE.

GENERAL NOTES:

1. SIGNS ON THIS SHEET MUST BE PROVIDED IN ADDITION TO THOSE SHOWN ON THE DETOUR PLANS.
2. LOCATION OF TEMPORARY K-RAIL, PAVEMENT MARKINGS, CHANNELIZERS, AND TEMPORARY SIGNS ARE CONCEPTUAL WITH THE EXACT LOCATIONS, AND TIMING OF PLACEMENT, TO BE DETERMINED BY THE RESIDENT ENGINEER.
3. ALL TEMPORARY SIGNS, CHANNELIZERS, AND PAVEMENT MARKINGS SHALL BE MAINTAINED ONLY AS LONG AS THIS TRAFFIC STAGE IS IN EFFECT (UNLESS OTHERWISE STATED BY THE RESIDENT ENGINEER). WHEN NO LONGER NEEDED, THEY WILL BE IMMEDIATELY REMOVED BY THE CONTRACTOR.

ALL DIMENSIONS ARE IN METERS UNLESS OTHERWISE NOTED.

city of san luis obispo

HIGUERA STREET BRIDGE REPLACEMENT

APPROVED BY
CITY ENGINEER

DATE	3/2000
SCALE	1:500
DESIGNED BY	C. EBELING
DRAWN BY	C. EBELING
CHECKED BY	A. OLSON
APPROVED BY	UTILITIES DEPARTMENT

TRAFFIC STAGING PLAN
STAGE #1

SPECIFICATION NO. 9367
FILE NO./LOCATION 0060 B
SHEET 19 OF 41

NETWORK NEWTONDATA00\WINSERVER\PROJECTS\199\3/01/00 HIGUERA STREET BRIDGE REPAIR\BRIDGE DRAWINGS\3/01/-1SP-1.DWG March 1, 1999

DIST	COUNTY	ROUTE	POST MILES TOTAL PROJECT	SHEET NO.	TOTAL SHEETS
5	SLO		–	19	41

REGISTERED CIVIL ENGINEER

PLANS APPROVAL DATE

REGISTERED PROFESSIONAL ENGINEER Ann Conner Olson No. C034496 EXP. 9/30/03 CIVIL STATE OF CALIFORNIA

MARTIN & KANE, Inc.
2200-B DOUGLAS BLVD, #150
ROSEVILLE • CA 95661

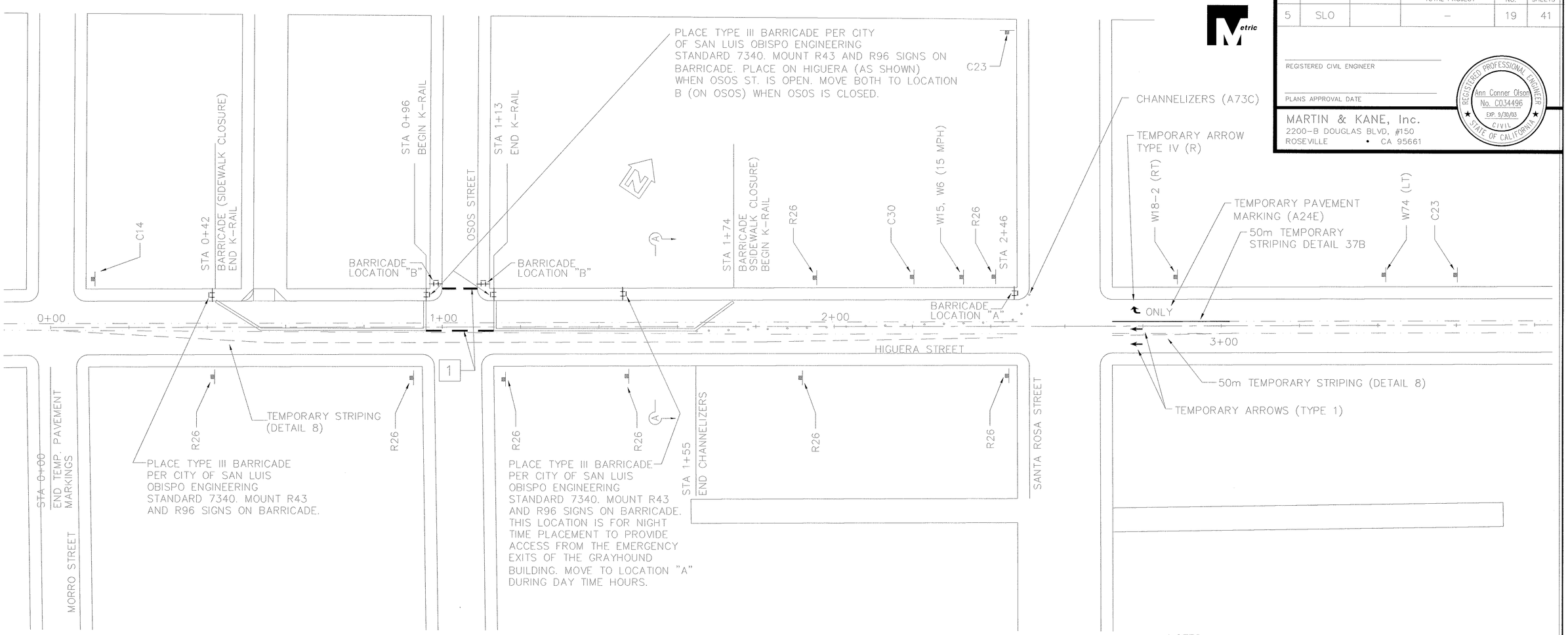

PLAN
Scale: 1:500

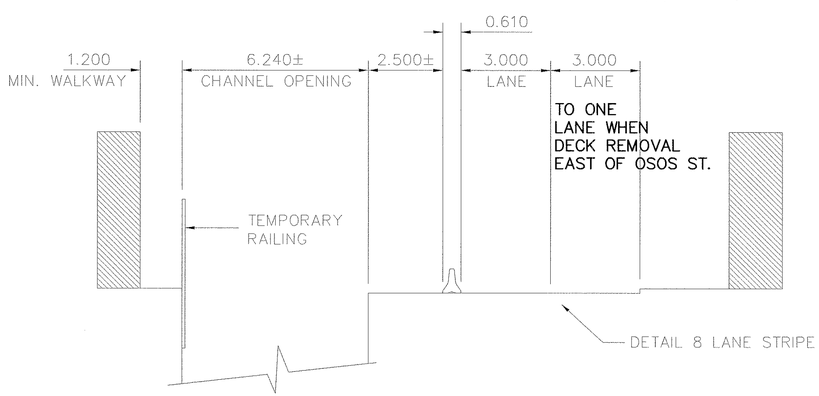

SECTION A–A
Scale: 1:100

NOTES:

1 PLACE TEMPORARY K-RAIL DURING CLOSURE OF OSOS STREET. MOUNT C2 SIGNS ON THE K-RAIL BARRICADE.

GENERAL NOTES:

1. SIGNS ON THIS SHEET MUST BE PROVIDED IN ADDITION TO THOSE SHOWN ON THE DETOUR PLANS.
2. LOCATION OF TEMPORARY K-RAIL, PAVEMENT MARKINGS, CHANNELIZERS, AND TEMPORARY SIGNS ARE CONCEPTUAL WITH THE EXACT LOCATIONS, AND TIMING OF PLACEMENT, TO BE DETERMINED BY THE RESIDENT ENGINEER.
3. ALL TEMPORARY SIGNS, CHANNELIZERS, AND PAVEMENT MARKINGS SHALL BE MAINTAINED ONLY AS LONG AS THIS TRAFFIC STAGE IS IN EFFECT (UNLESS OTHERWISE STATED BY THE RESIDENT ENGINEER). WHEN NO LONGER NEEDED, THEY WILL BE IMMEDIATELY REMOVED BY THE CONTRACTOR.

ALL DIMENSIONS ARE IN METERS UNLESS OTHERWISE NOTED.

RECORD DRAWING
DATE 8/27/03 BY: BR

NETWORK NEIGHBORHOOD\MKSERVER\PROJECTS\1997\97017.00 HIGUERA STREET BRIDGE REHAB\BRIDGE DRAWINGS\97017-TSP-1.DWG March 1, 1999

city of san luis obispo

HIGUERA STREET BRIDGE REPLACEMENT

APPROVED BY
CITY ENGINEER

DATE	3/2000
SCALE	1:500
DESIGNED BY	C. EBELING
DRAWN BY	C. EBELING
CHECKED BY	A. OLSON
APPROVED BY	
UTILITIES DEPARTMENT	

TRAFFIC STAGING PLAN
STAGE #1
PHASE # 1

SPECIFICATION NO. 9367
FILE NO./LOCATION 0060 B
SHEET 19R OF 41

DIST	COUNTY	ROUTE	POST MILES TOTAL PROJECT	SHEET NO.	TOTAL SHEETS
5	SLO		–	20	41

REGISTERED CIVIL ENGINEER

4/5/2000
PLANS APPROVAL DATE

REGISTERED PROFESSIONAL ENGINEER
Ann Conner Olson
No. C034496
EXP. 9/30/03
CIVIL
STATE OF CALIFORNIA

MARTIN & KANE, Inc.
2200-B DOUGLAS BLVD. #150
ROSEVILLE • CA 95661

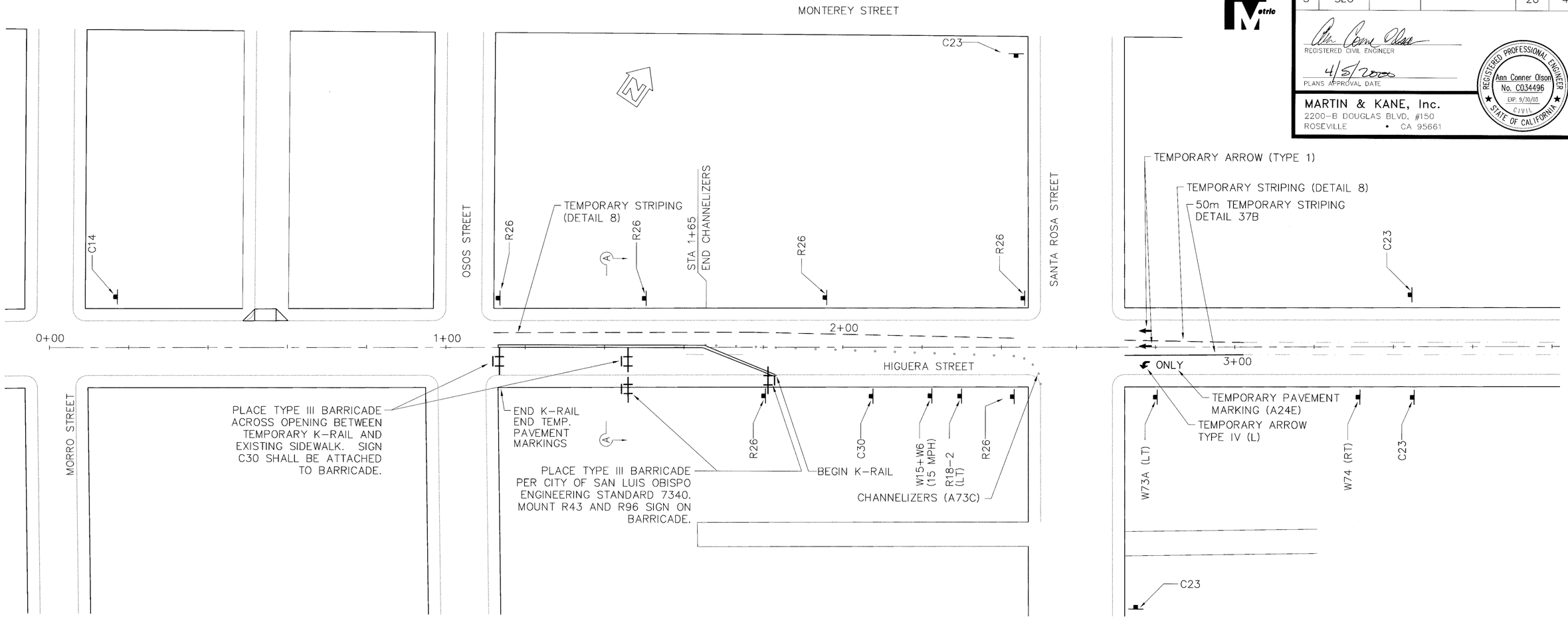

PLAN
Scale: 1:500

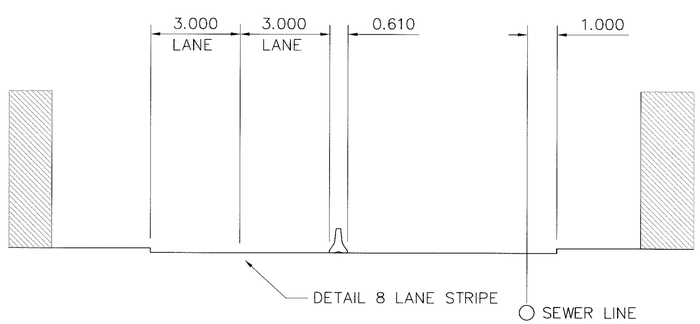

SECTION A-A
Scale: 1:100

GENERAL NOTES:

1. SIGNS ON THIS SHEET MUST BE PROVIDED IN ADDITION TO THOSE SHOWN ON THE DETOUR PLANS.
2. LOCATION OF TEMPORARY K-RAIL, PAVEMENT MARKINGS, CHANNELIZERS, AND TEMPORARY SIGNS ARE CONCEPTUAL WITH THE EXACT LOCATIONS, AND TIMING OF PLACEMENT, TO BE DETERMINED BY THE RESIDENT ENGINEER.
3. ALL TEMPORARY SIGNS, CHANNELIZERS, AND PAVEMENT MARKINGS SHALL BE MAINTAINED ONLY AS LONG AS THIS TRAFFIC STAGE IS IN EFFECT (UNLESS OTHERWISE STATED BY THE RESIDENT ENGINEER). WHEN NO LONGER NEEDED, THEY WILL BE IMMEDIATELY REMOVED BY THE CONTRACTOR.

ALL DIMENSIONS ARE IN METERS UNLESS OTHERWISE NOTED.

city of san luis obispo

HIGUERA STREET BRIDGE REPLACEMENT

APPROVED BY
CITY ENGINEER

DATE	3/2000
SCALE	1:500
DESIGNED BY	C. EBELING
DRAWN BY	C. EBELING
CHECKED BY	A. OLSON
APPROVED BY	
UTILITIES DEPARTMENT	

TRAFFIC STAGING PLAN
STAGE #2

SPECIFICATION NO. 9367
FILE NO./LOCATION 0060 B
SHEET 20 OF 41

NETWORK NEIGHBORHOOD\MKSERVER\PROJECTS\1997\97017.00 HIGUERA STREET BRIDGE REHAB\BRIDGE DRAWINGS\97017-TSP-2.DWG March 1, 1999

DIST	COUNTY	ROUTE	POST MILES TOTAL PROJECT	SHEET NO.	TOTAL SHEETS
5	SLO		–	20	41

REGISTERED CIVIL ENGINEER

PLANS APPROVAL DATE

REGISTERED PROFESSIONAL ENGINEER Ann Conner Olson No. C034496 EXP. 9/30/03 CIVIL STATE OF CALIFORNIA

MARTIN & KANE, Inc.
2200-B DOUGLAS BLVD. #150
ROSEVILLE • CA 95661

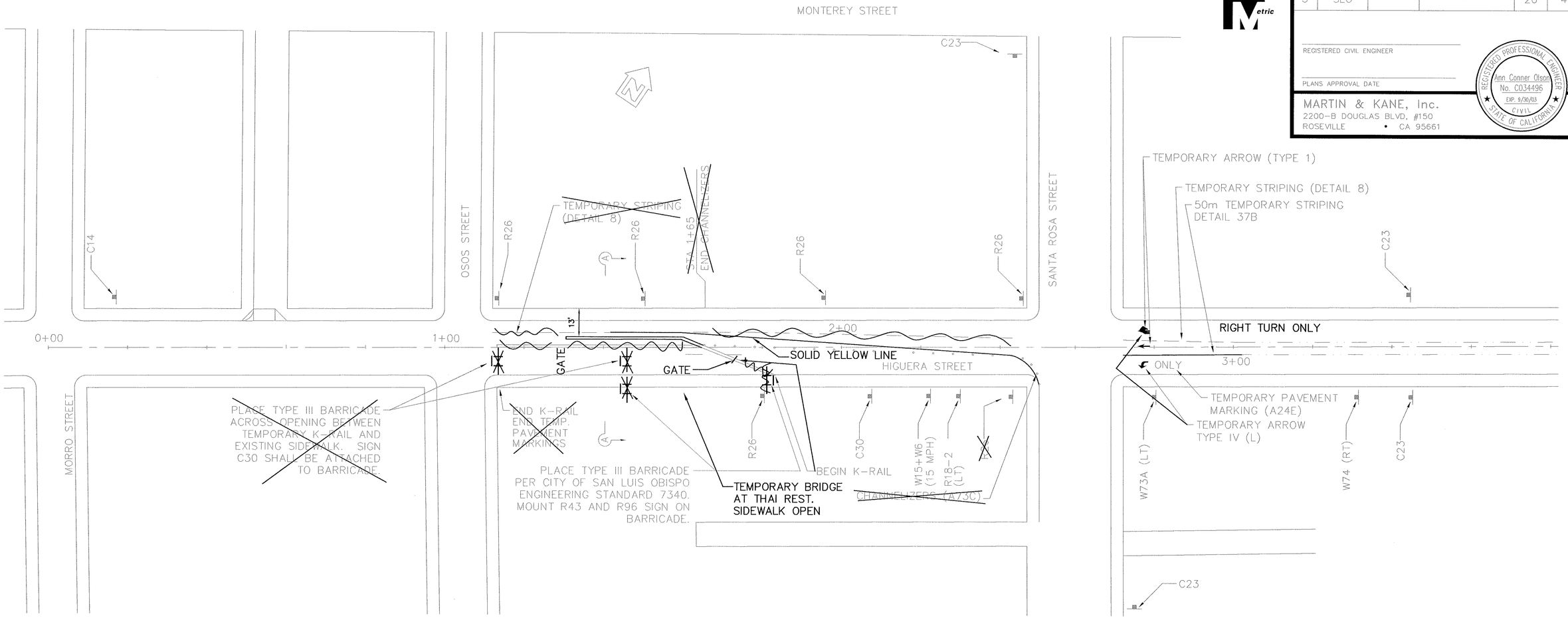

PHASE 2
STAGE 1

PLAN
Scale: 1:500

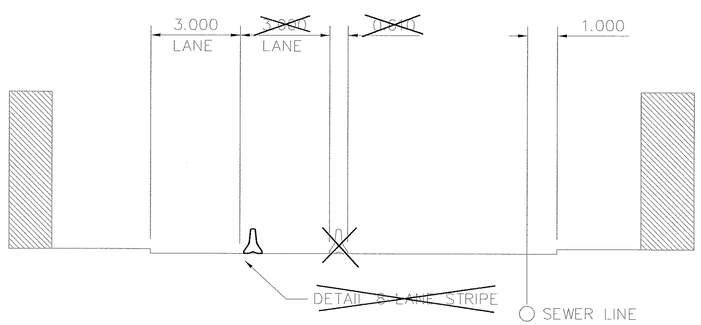

SECTION A–A
Scale: 1:100

GENERAL NOTES:

1. SIGNS ON THIS SHEET MUST BE PROVIDED IN ADDITION TO THOSE SHOWN ON THE DETOUR PLANS.
2. LOCATION OF TEMPORARY K-RAIL, PAVEMENT MARKINGS, CHANNELIZERS, AND TEMPORARY SIGNS ARE CONCEPTUAL WITH THE EXACT LOCATIONS, AND TIMING OF PLACEMENT, TO BE DETERMINED BY THE RESIDENT ENGINEER.
3. ALL TEMPORARY SIGNS, CHANNELIZERS, AND PAVEMENT MARKINGS SHALL BE MAINTAINED ONLY AS LONG AS THIS TRAFFIC STAGE IS IN EFFECT (UNLESS OTHERWISE STATED BY THE RESIDENT ENGINEER). WHEN NO LONGER NEEDED, THEY WILL BE IMMEDIATELY REMOVED BY THE CONTRACTOR.

ALL DIMENSIONS ARE IN METERS UNLESS OTHERWISE NOTED.

RECORD DRAWING
DATE: 3/27/02 BY: SR

NETWORK NEIGHBORHOOD\WKSERVER\PROJECTS\1997\97017.00 HIGUERA STREET BRIDGE REHAB\BRIDGE DRAWINGS\97017-TSP-2.DWG March 1, 1999

city of san luis obispo

HIGUERA STREET BRIDGE REPLACEMENT

APPROVED BY
CITY ENGINEER

DATE	3/2000
SCALE	1:500
DESIGNED BY	C. EBELING
DRAWN BY	C. EBELING
CHECKED BY	A. OLSON
APPROVED BY	
UTILITIES DEPARTMENT	

TRAFFIC STAGING PLAN
STAGE ~~2~~ #1
PHASE #2

SPECIFICATION NO. 9367
FILE NO./LOCATION 00608
SHEET 20R OF 41

DIST	COUNTY	ROUTE	POST MILES TOTAL PROJECT	SHEET NO.	TOTAL SHEETS
5	SLO		–	21	41

Ronald L. Rivett
REGISTERED CIVIL ENGINEER

4/19/00
PLANS APPROVAL DATE

REGISTERED PROFESSIONAL ENGINEER
Ronald L. Rivett
No. 31,269
EXP. 12/31/00
CIVIL
STATE OF CALIFORNIA

MARTIN & KANE, Inc.
2200-B DOUGLAS BLVD. #150
ROSEVILLE • CA 95661

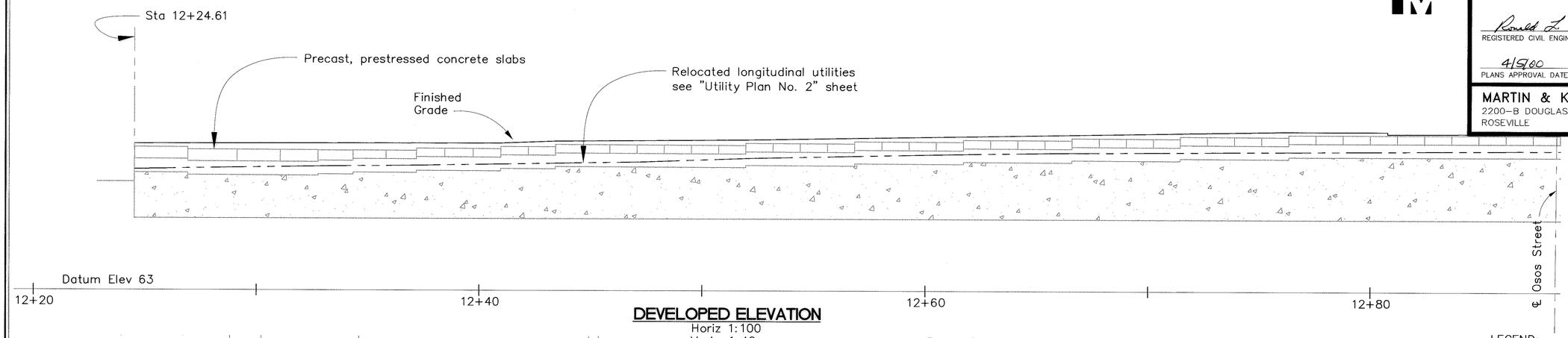

DEVELOPED ELEVATION

Horiz 1:100
Vert 1:40

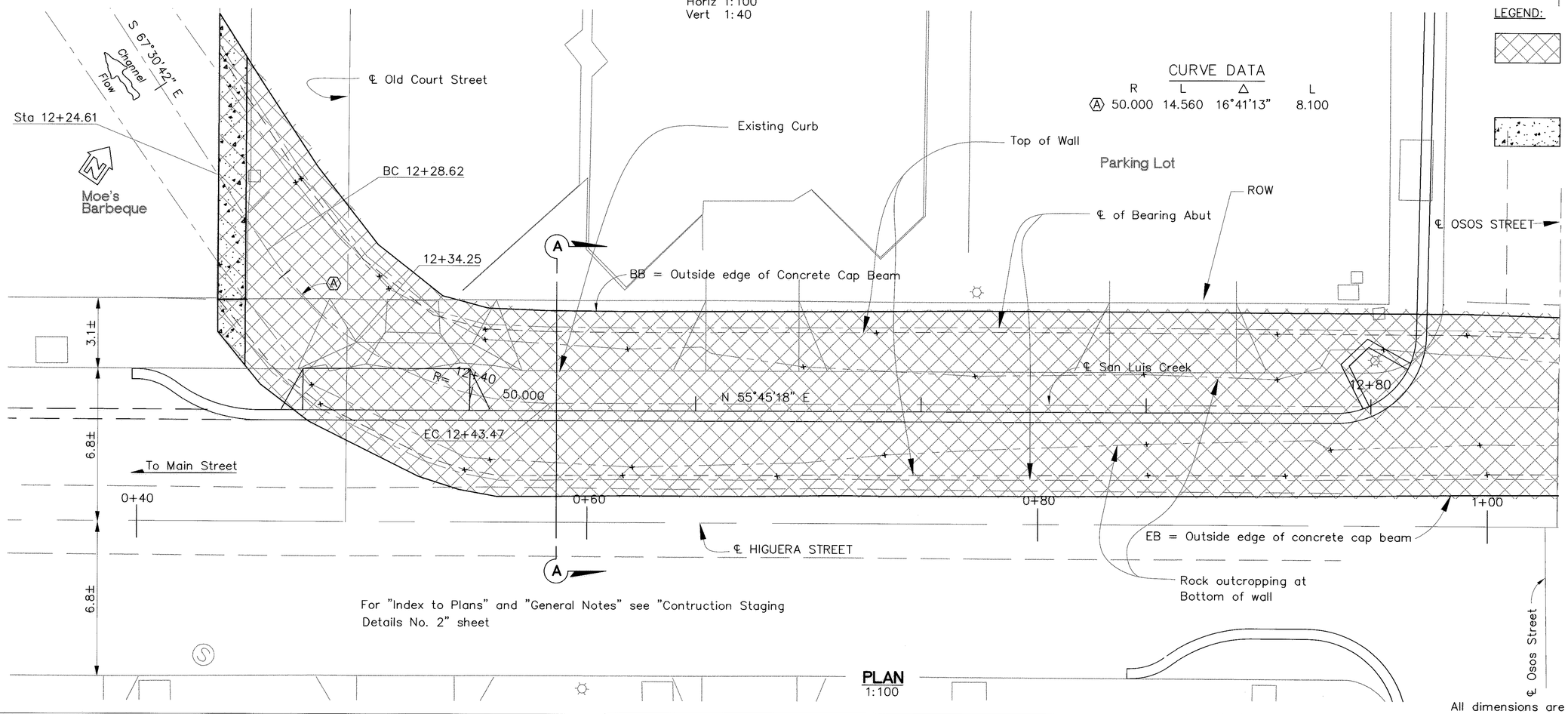

CURVE DATA

	R	L	Δ	L
Ⓐ	50.000	14.560	16°41'13"	8.100

LEGEND:

Concrete Deck, Steel Griders and Top of Masonry Rock Wall to be Removed (Bridge Removal)

Cast-in-place Reinforced Concrete slab

Note: For Section A-A see "General Plan No.3" sheet.

The contractor shall verify all controlling field dimensions before ordering or fabricatiing any materials.

For "Index to Plans" and "General Notes" see "Contruction Staging Details No. 2" sheet

PLAN

1:100

All dimensions are in meters unless otherwise noted

N:\MKSR\R1\MK PROJECTS\1997\97017.00 HIGUERA STREET BRIDGE REHAB\DRAWINGS (NOVEMBER 1999)\BRIDGE DRAWINGS (11-23-99)\97017-1-GP.dwg 1/18/00

CITY OF SAN LUIS OBISPO

HIGUERA STREET BRIDGE REPLACEMENT

FOR REDUCED PLANS ORIGINAL SCALE IS IN MILLIMETERS 0 20 40 60 80 100

APPROVED BY

CITY ENGINEER

DATE	3/2000
SCALE	As Noted
DESIGNED BY	R.F.
DRAWN BY	R.D., K.W.
CHECKED BY	R.R.
APPROVED BY	UTILITIES DEPARTMENT

GENERAL PLAN NO. 1

SPECIFICATION NO. 9367

FILE NO./LOCATION 0060 B

SHEET 21 OF 41

DIST	COUNTY	ROUTE	POST MILES TOTAL PROJECT	SHEET NO.	TOTAL SHEETS
5	SLO		–	22	41

Ronald L. Rivett
REGISTERED CIVIL ENGINEER

4/5/00
PLANS APPROVAL DATE

REGISTERED PROFESSIONAL ENGINEER Ronald L. Rivett No. 31,269 EXP. 12/31/00 CIVIL STATE OF CALIFORNIA

MARTIN & KANE, Inc.
2200-B DOUGLAS BLVD, #150
ROSEVILLE • CA 95661

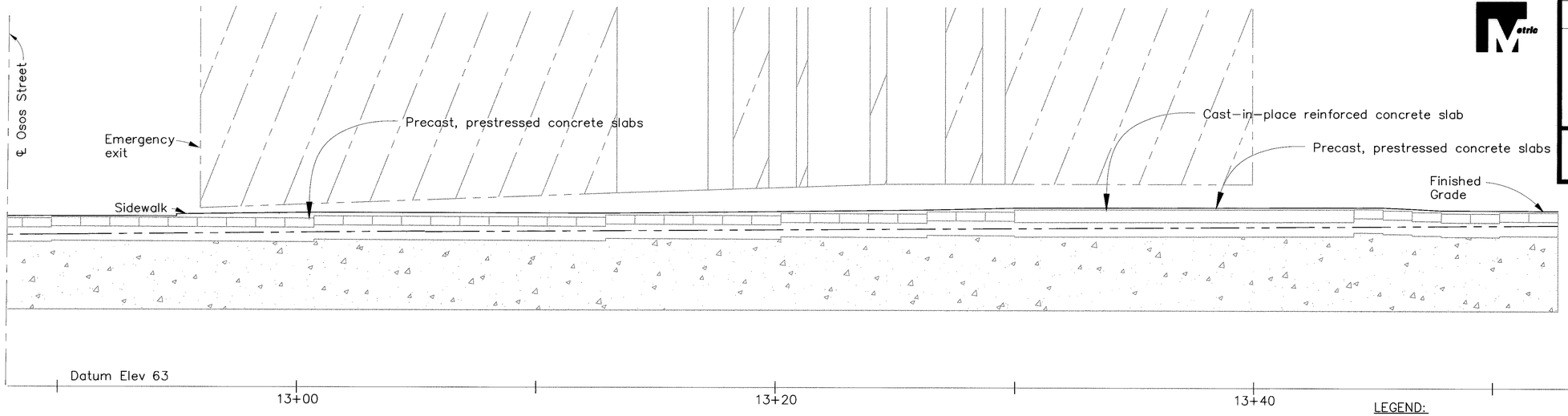

DEVELOPED ELEVATION

Horiz 1:100
Vert 1:40

LEGEND:

Concrete Deck, Steel Griders and Top of Masonry Rock Wall to be Removed (Bridge Removal)

Cast-in-Place Reinforced Concrete Slab

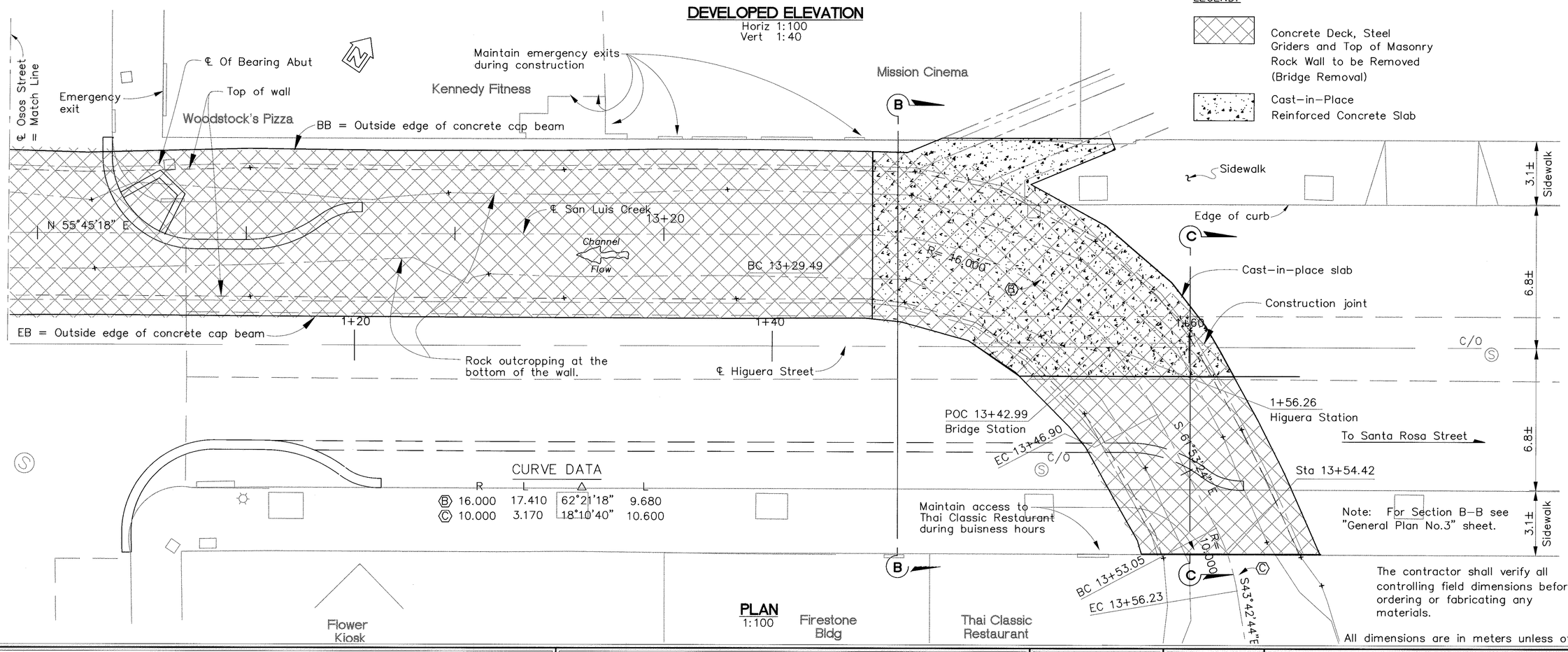

PLAN

1:100

CURVE DATA

	R	L	Δ	L
B	16.000	17.410	62°21'18"	9.680
C	10.000	3.170	18°10'40"	10.600

Note: For Section B-B see "General Plan No.3" sheet.

The contractor shall verify all controlling field dimensions before ordering or fabricating any materials.

All dimensions are in meters unless otherwise noted.

N:\MKSR\R1\MK PROJECTS\1997\97017.00 HIGUERA STREET BRIDGE REHAB\DRAWINGS (NOVEMBER 1999)\BRIDGE DRAWINGS (11-23-99)\97017-1-GP.dwg 1/18/00

CITY OF SAN LUIS OBISPO

HIGUERA STREET BRIDGE REPLACEMENT

FOR REDUCED PLANS ORIGINAL SCALE IS IN MILLIMETERS 0 20 40 60 80 100

APPROVED BY

CITY ENGINEER

DATE	3/2000
SCALE	As Noted
DESIGNED BY	R.F.
DRAWN BY	R.D., K.W.
CHECKED BY	R.R.
APPROVED BY	
UTILITIES DEPARTMENT	

GENERAL PLAN NO. 2

SPECIFICATION NO. 9367

FILE NO./LOCATION 0060 B

SHEET 22 OF 41

DIST	COUNTY	ROUTE	POST MILES TOTAL PROJECT	SHEET NO.	TOTAL SHEETS
5	SLO		–	22	41

REGISTERED CIVIL ENGINEER

PLANS APPROVAL DATE

REGISTERED PROFESSIONAL ENGINEER
Ronald L. Rivelli
No. 31,269
EXP. 12/31/00
CIVIL
STATE OF CALIFORNIA

MARTIN & KANE, Inc.
2200-B DOUGLAS BLVD. #150
ROSEVILLE • CA 95661

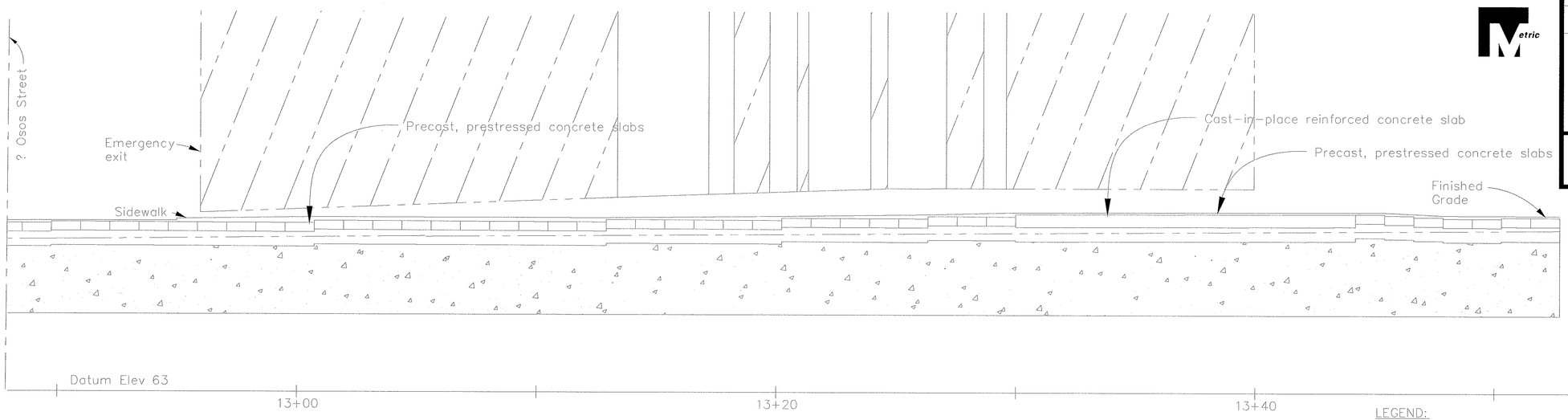

DEVELOPED ELEVATION

Horiz 1:100
Vert 1:40

LEGEND:

Concrete Deck, Steel Griders and Top of Masonry Rock Wall to be Removed (Bridge Removal)

Cast-in-Place Reinforced Concrete Slab

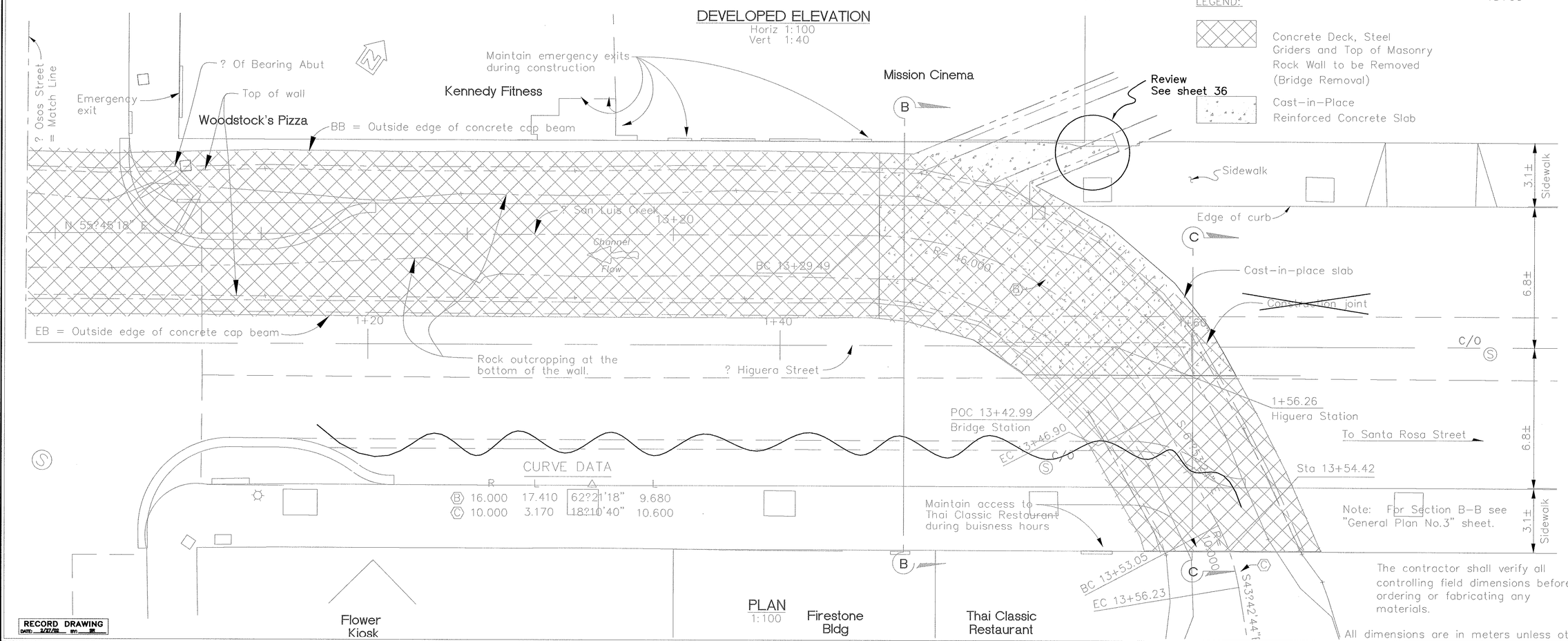

PLAN

1:100

CURVE DATA

	R	L	Δ	L
B	16.000	17.410	62°21'18"	9.680
C	10.000	3.170	18°10'40"	10.600

The contractor shall verify all controlling field dimensions before ordering or fabricating any materials.

All dimensions are in meters unless otherwise noted.

RECORD DRAWING
DATE: 2/27/02 BY: SR

N:\MKSRVR1\MK PROJECTS\1997\97017.00 HIGUERA STREET BRIDGE REHAB\DRAWINGS (NOVEMBER 1999)\BRIDGE DRAWINGS (11-23-99)\97017-1-GP.dwg 1/18/00

city of san luis obispo

HIGUERA STREET BRIDGE REPLACEMENT

FOR REDUCED PLANS ORIGINAL SCALE IS IN MILLIMETERS 0 20 40 60 80 100

APPROVED BY

CITY ENGINEER

DATE	3/2000
SCALE	As Noted
DESIGNED BY	R.F.
DRAWN BY	R.D., K.W.
CHECKED BY	R.R.
APPROVED BY	UTILITIES DEPARTMENT

GENERAL PLAN NO. 2

SPECIFICATION NO. 9367

FILE NO./LOCATION 0060 B

SHEET 22 OF 41

DIST	COUNTY	ROUTE	POST MILES TOTAL PROJECT	SHEET NO.	TOTAL SHEETS
5	SLO		–	23	41

REGISTERED CIVIL ENGINEER

4/5/00
PLANS APPROVAL DATE

REGISTERED PROFESSIONAL ENGINEER Ronald L. Rivett No. 31,269 EXP. 12/31/00 CIVIL STATE OF CALIFORNIA

MARTIN & KANE, Inc.
2200-B DOUGLAS BLVD. #150
ROSEVILLE • CA 95661

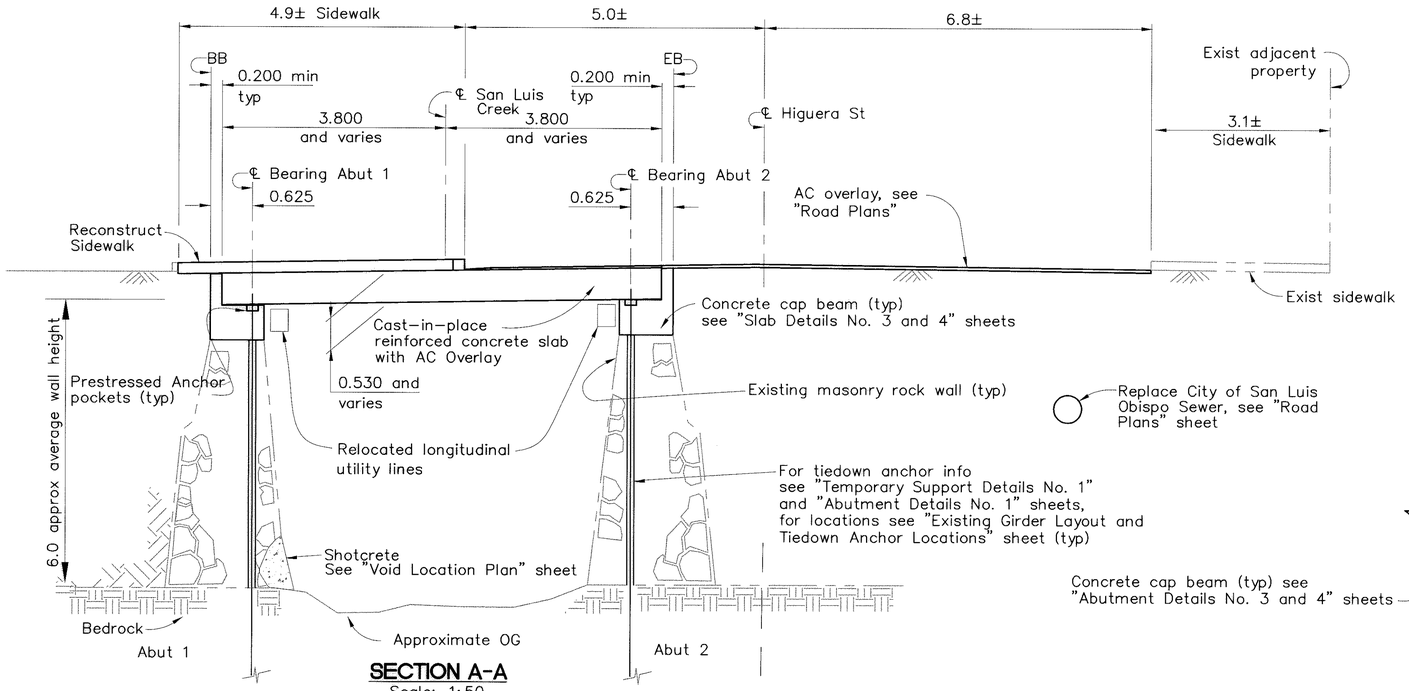

SECTION A-A
Scale: 1:50

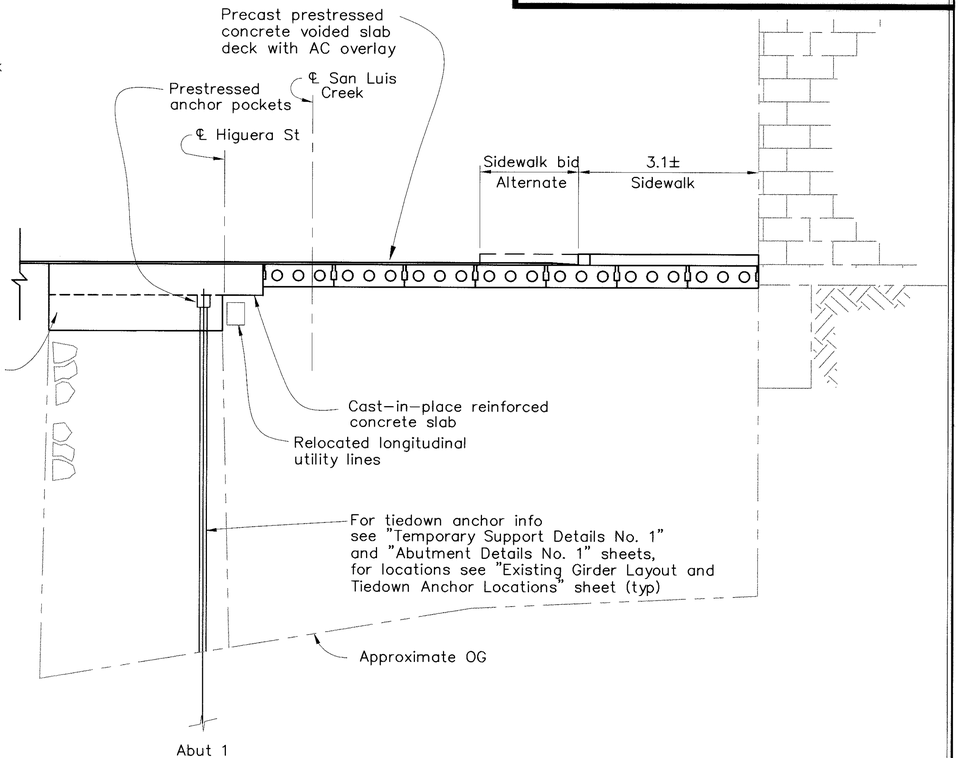

SECTION C-C
Scale: 1:50

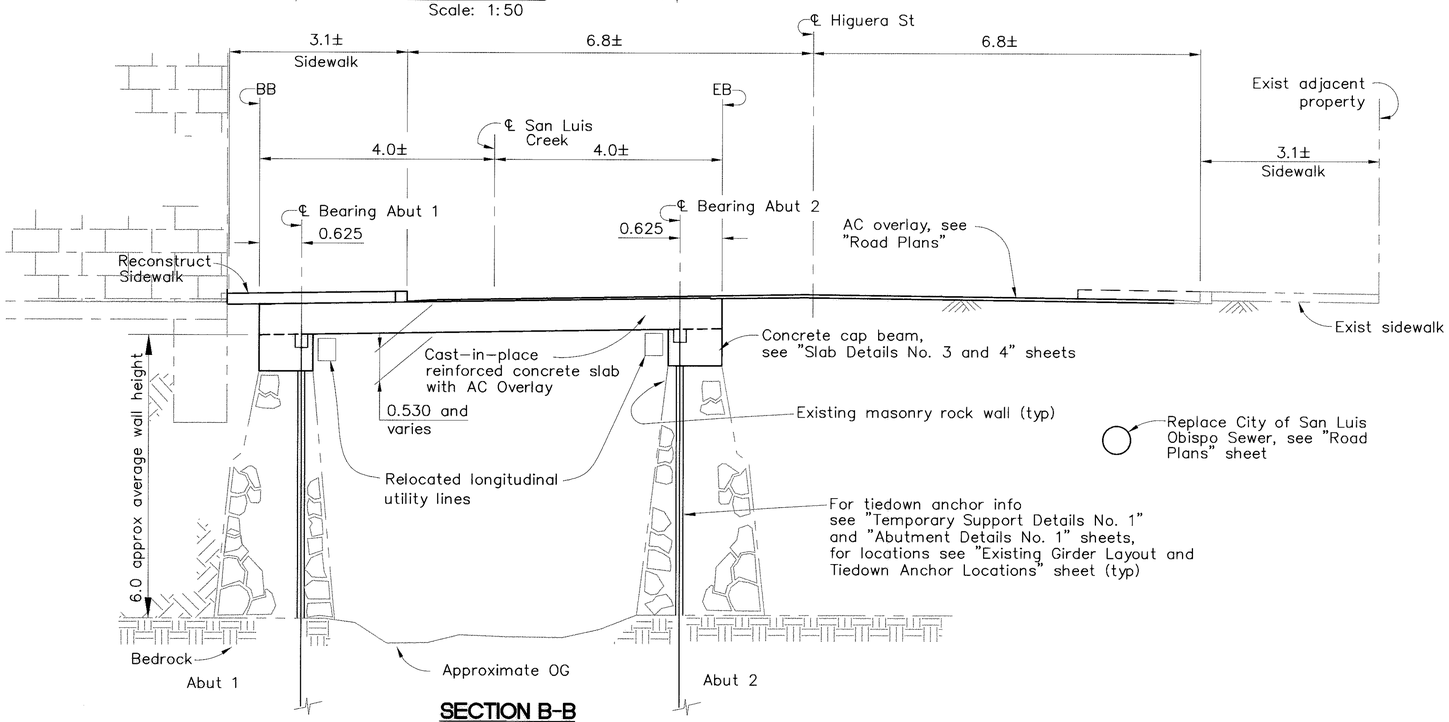

SECTION B-B
Scale: 1:50

Note: For construction staging, see "CONSTRUCTION STAGING DETAILS NO. 1, 2 & 3" sheets

The contractor shall verify all controlling field dimensions before ordering or fabricating any materials.

All dimensions are in meters unless otherwise noted.

N:\MKSRVR1\MK PROJECTS\1997\97017.00 HIGUERA STREET BRIDGE REHAB\DRAWINGS (NOVEMBER 1999)\BRIDGE DRAWINGS (11-23-99)\97017-1-GP.dwg 1/18/00

CITY OF SAN LUIS OBISPO

HIGUERA STREET BRIDGE REPLACEMENT

FOR REDUCED PLANS ORIGINAL SCALE IS IN MILLIMETERS 0 20 40 60 80 100

APPROVED BY
CITY ENGINEER

DATE	3/2000
SCALE	As Noted
DESIGNED BY	R.F.
DRAWN BY	R.D., K.W.
CHECKED BY	R.R.
APPROVED BY	
UTILITIES DEPARTMENT	

GENERAL PLAN NO. 3

SPECIFICATION NO. 9367
FILE NO./LOCATION 0066 B
SHEET 23 OF 41

DIST	COUNTY	ROUTE	POST MILES TOTAL PROJECT	SHEET NO.	TOTAL SHEETS
5	SLO		–	24	41

REGISTERED CIVIL ENGINEER

4/5/00
PLANS APPROVAL DATE

REGISTERED PROFESSIONAL ENGINEER
Ronald L. Rivett
No. 31,269
EXP. 12/31/00
CIVIL
STATE OF CALIFORNIA

MARTIN & KANE, Inc.
2200-B DOUGLAS BLVD, #150
ROSEVILLE • CA 95661

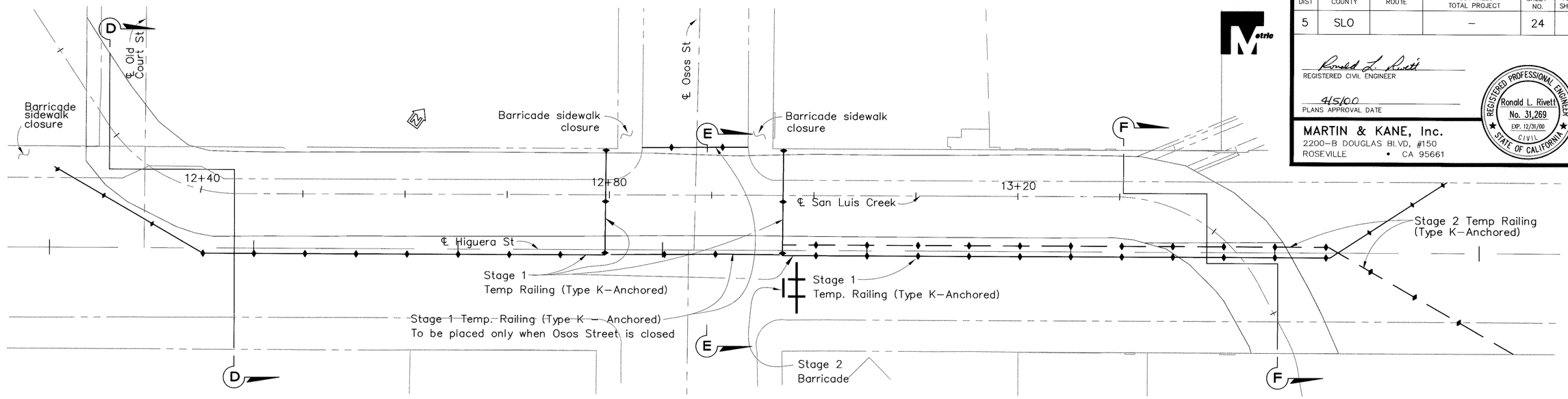

PLAN
Scale: 1:200

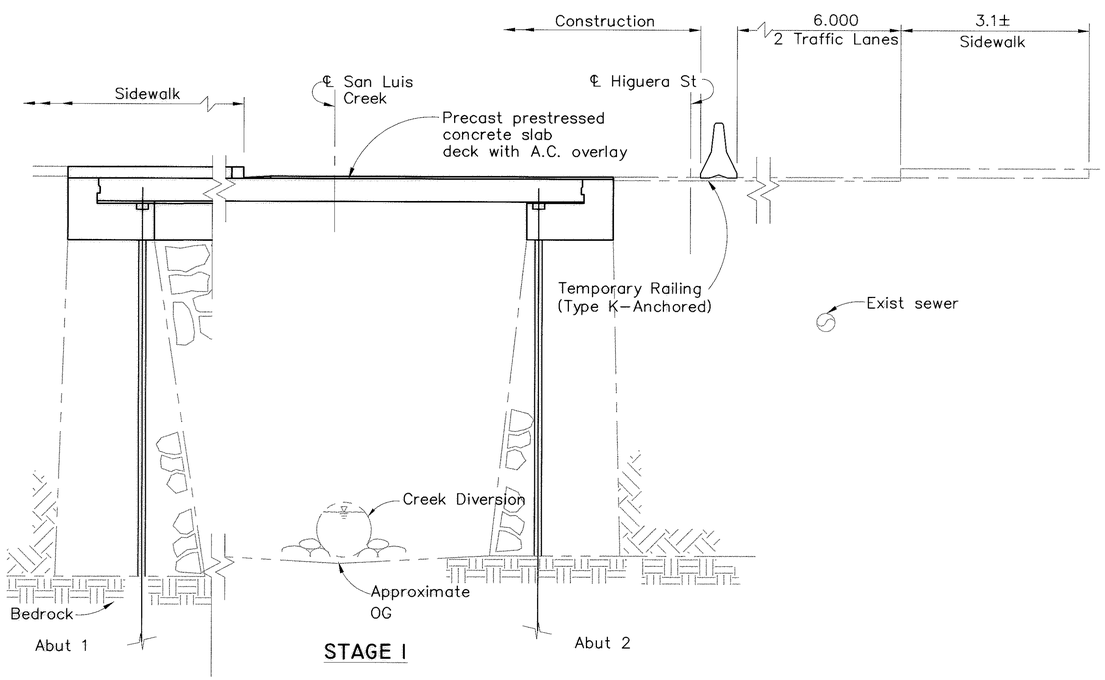

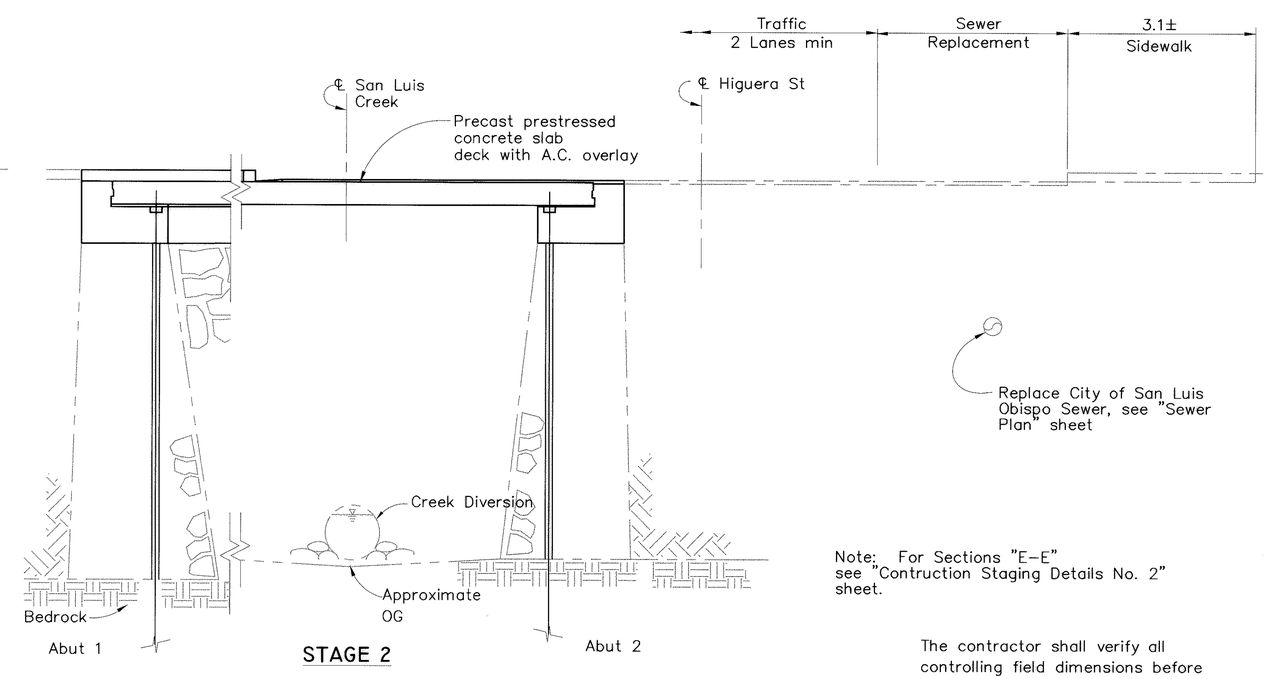

SECTION D-D
Scale: 1:50

Note: For Sections "E-E" see "Contruction Staging Details No. 2" sheet.

The contractor shall verify all controlling field dimensions before ordering or fabricating any materials.

All dimensions are in meters unless otherwise noted.

City of San Luis Obispo

HIGUERA STREET BRIDGE REPLACEMENT

FOR REDUCED PLANS ORIGINAL SCALE IS IN MILLIMETERS 0 20 40 60 80 100

APPROVED BY

CITY ENGINEER

DATE	3/2000
SCALE	As Noted
DESIGNED BY	R.F.
DRAWN BY	R.D., K.W.
CHECKED BY	R.R.
APPROVED BY	
UTILITIES DEPARTMENT	

CONSTRUCTION STAGING DETAILS NO. 1

SPECIFICATION NO. 9367

FILE NO./LOCATION 0060 B

SHEET 24 OF 41

N:\MKSRVR1\MK PROJECTS\1997\97017.00 HIGUERA STREET BRIDGE REHAB\DRAWINGS (NOVEMBER 1999)\BRIDGE DRAWINGS (11-23-99)\97017-SC.dwg 1/18/00

DIST	COUNTY	ROUTE	POST MILES TOTAL PROJECT	SHEET NO.	TOTAL SHEETS
5	SLO		–	25	41

Ronald L. Rivett
REGISTERED CIVIL ENGINEER

4/5/00
PLANS APPROVAL DATE

REGISTERED PROFESSIONAL ENGINEER
Ronald L. Rivett
No. 31,269
EXP. 12/31/00
CIVIL
STATE OF CALIFORNIA

MARTIN & KANE, Inc.
2200-B DOUGLAS BLVD, #150
ROSEVILLE • CA 95661

General Notes Load Factor Design

Design: Bridge Design Specifications
(1983 AASHTO with Interims and Revisions by CALTRANS)

Dead Load: Includes 1.68 KPa for future wearing surface.

Live Loading: HS20-44 and alternative and permit design load.

Seismic Loading: Peak Rock Acceleration = 0.5g
Depth of Alluvium = 0-3m

Reinforced Concrete:

f_y = 414 MPa
f'_c = 22.4 MPa
n = g

Prestressed Concrete:

See "Prestressing General Notes" on "Precast Concrete Slab Details" sheet.

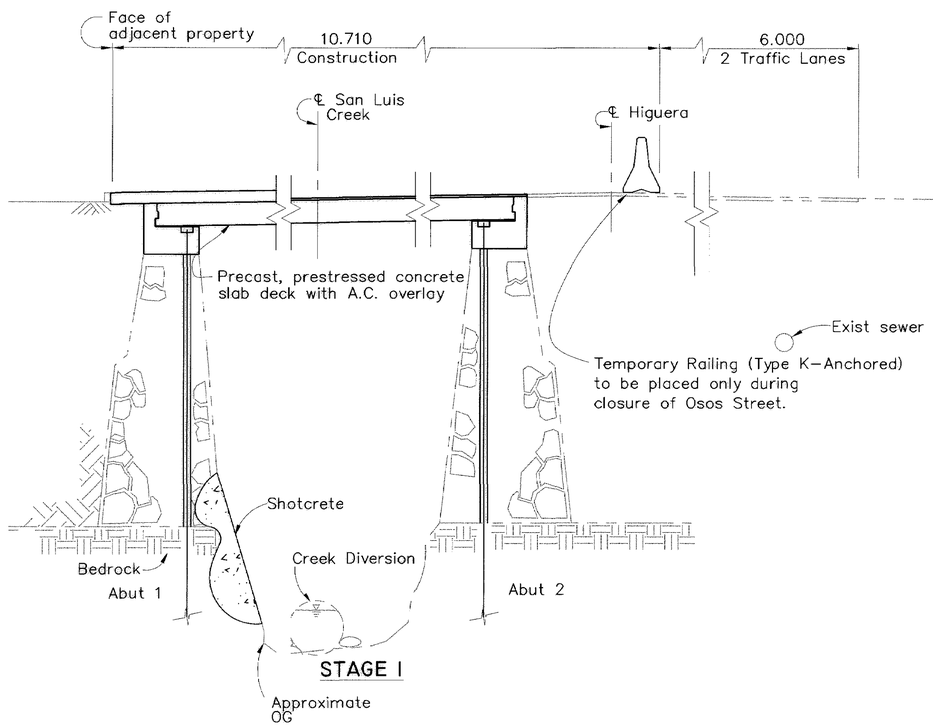

STAGE 1

SECTION E-E
Scale: 1:50

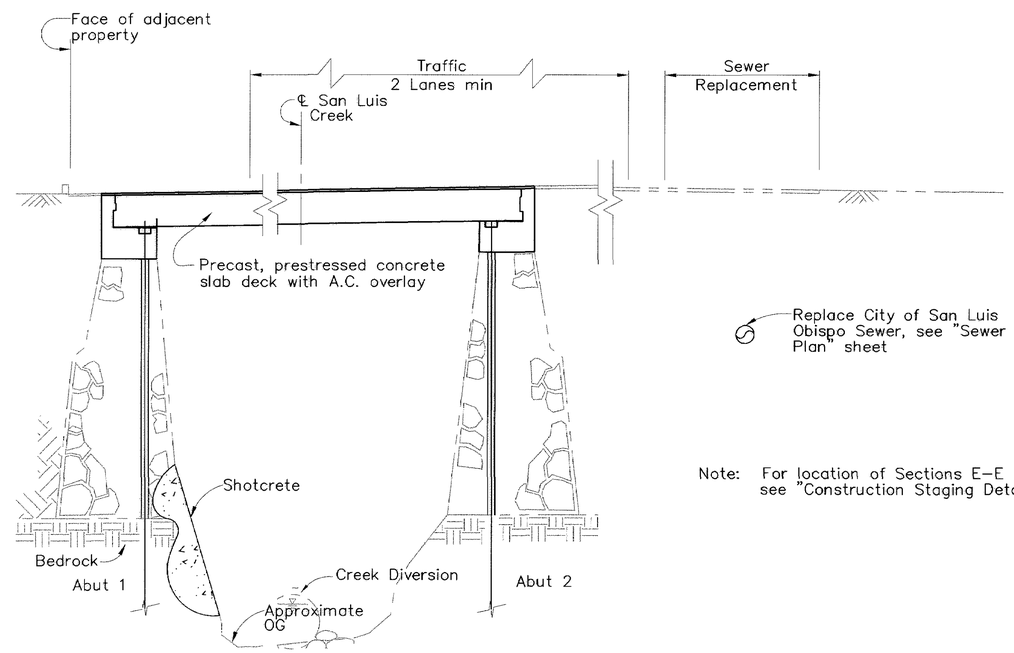

STAGE 2

Note: For location of Sections E-E see "Construction Staging Details No. 1" sheet.

The contractor shall verify all controlling field dimensions before ordering or fabricating any materials.

All dimensions are in meters unless otherwise noted.

N:\MKSRVR1\MK PROJECTS\1997\97017.00 HIGUERA STREET BRIDGE REHAB\DRAWINGS (NOVEMBER 1999)\BRIDGE DRAWINGS (11-23-99)\97017-SC.dwg 1/18/00

CITY OF SAN LUIS OBISPO

HIGUERA STREET BRIDGE REPLACEMENT

FOR REDUCED PLANS ORIGINAL SCALE IS IN MILLIMETERS 0 20 40 60 80 100

APPROVED BY
CITY ENGINEER

DATE	3/2000
SCALE	As Noted
DESIGNED BY	R.F.
DRAWN BY	R.D., K.W.
CHECKED BY	R.R.
APPROVED BY UTILITIES DEPARTMENT	

CONSTRUCTION STAGING DETAILS NO. 2

SPECIFICATION NO. 9367
FILE NO./LOCATION 0060 B
SHEET 25 OF 41

DIST	COUNTY	ROUTE	POST MILES TOTAL PROJECT	SHEET NO.	TOTAL SHEETS
5	SLO		–	25	41

REGISTERED CIVIL ENGINEER

PLANS APPROVAL DATE

REGISTERED PROFESSIONAL ENGINEER Ronald L. Rivett No. 31,269 EXP. 12/31/00 CIVIL STATE OF CALIFORNIA

MARTIN & KANE, Inc.
2200-B DOUGLAS BLVD, #150
ROSEVILLE • CA 95661

General Notes Load Factor Design

Design: Bridge Design Specifications
(1983 AASHTO with Interims and Revisions by CALTRANS)

Dead Load: Includes 1.68 KPa for future wearing surface.

Live Loading: HS20-44 and alternative and permit design load.

Seismic Loading: Peak Rock Acceleration = 0.5g
Depth of Alluvium = 0-3m

Reinforced Concrete:

f_y = 414 MPa
f'_c = 22.4 MPa
n = g

Prestressed Concrete:

See "Prestressing General Notes" on "Precast Concrete Slab Details" sheet.

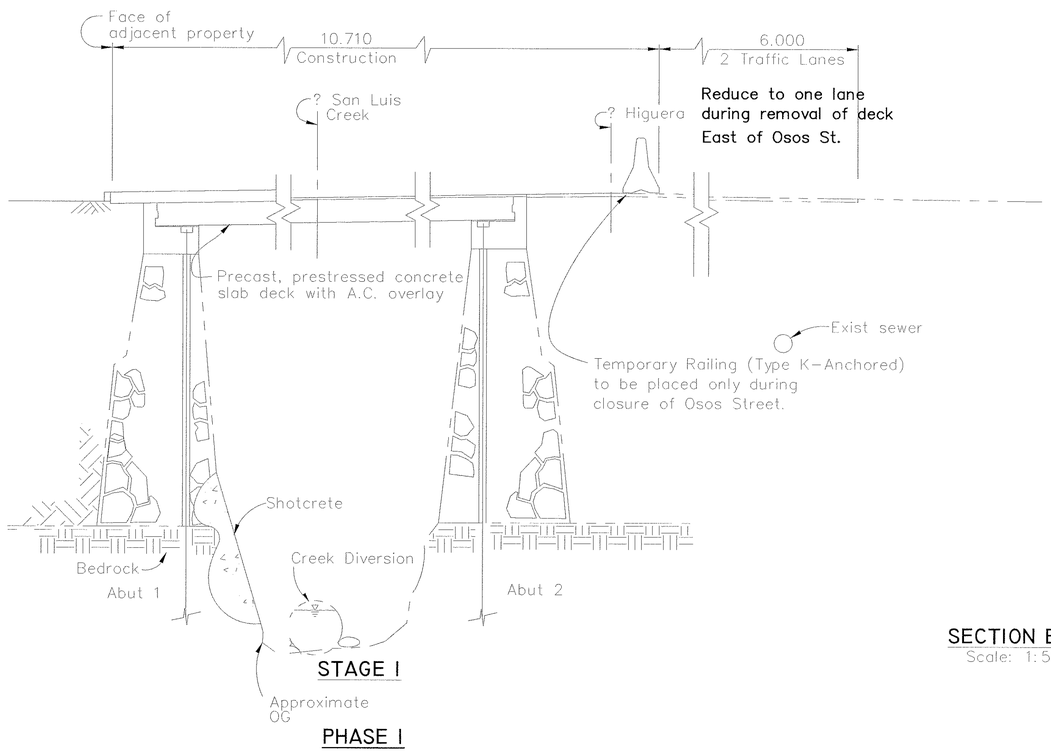

SECTION E-E
Scale: 1:50

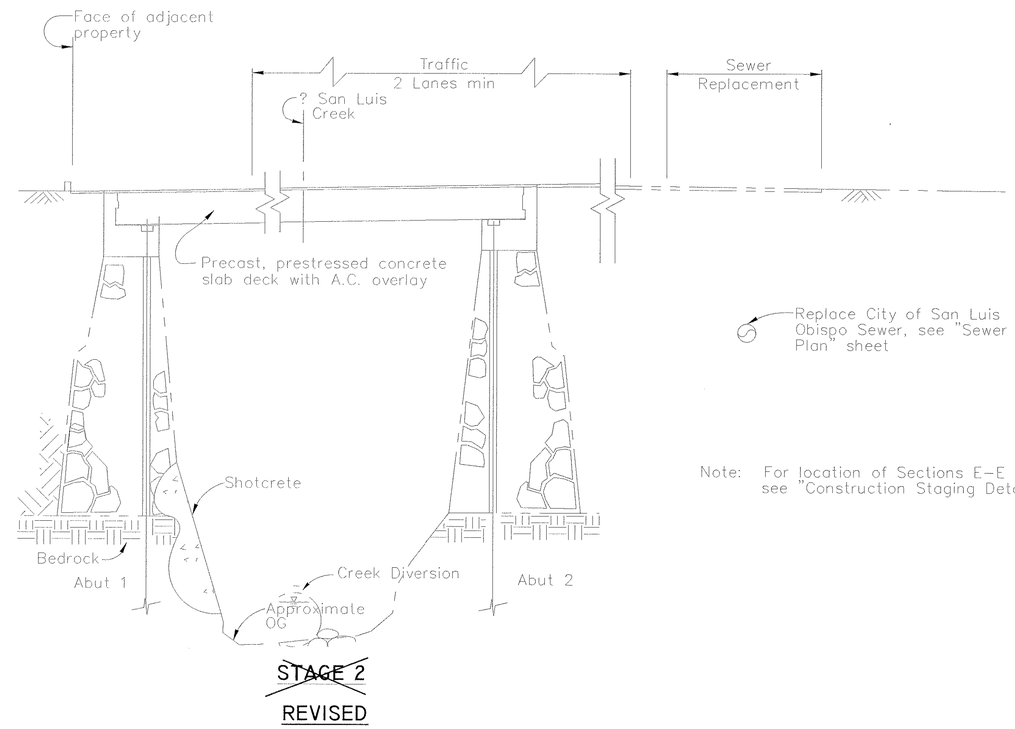

SEWER REPALCEMENT
DONE DURING STAGE I & STAGE 2, PHASE 2

Note: For location of Sections E-E see "Construction Staging Details No. 1" sheet.

The contractor shall verify all controlling field dimensions before ordering or fabricating any materials.

All dimensions are in meters unless otherwise noted.

RECORD DRAWING
DATE: 2/28/02 BY: SR

N:\MKSRVR1\MK PROJECTS\1997\97017.00 HIGUERA STREET BRIDGE REHAB\DRAWINGS (NOVEMBER 1999)\BRIDGE DRAWINGS (11-23-99)\97017-SC.dwg 1/18/00

city of san luis obispo

HIGUERA STREET BRIDGE REPLACEMENT

FOR REDUCED PLANS ORIGINAL SCALE IS IN MILLIMETERS 0 20 40 60 80 100

APPROVED BY
CITY ENGINEER

DATE	3/2000
SCALE	As Noted
DESIGNED BY	R.F.
DRAWN BY	R.D., K.W.
CHECKED BY	R.R.
APPROVED BY	
UTILITIES DEPARTMENT	

CONSTRUCTION STAGING DETAILS NO. 2

SPECIFICATION NO. 9367
FILE NO./LOCATION 0060 B
SHEET 25R OF 41

DIST	COUNTY	ROUTE	POST MILES TOTAL PROJECT	SHEET NO.	TOTAL SHEETS
5	SLO		–	26	41

Ronald L. Rivett
REGISTERED CIVIL ENGINEER

4/5/00
PLANS APPROVAL DATE

REGISTERED PROFESSIONAL ENGINEER
Ronald L. Rivett
No. 31,269
EXP. 12/31/00
CIVIL
STATE OF CALIFORNIA

MARTIN & KANE, Inc.
2200-B DOUGLAS BLVD, #150
ROSEVILLE • CA 95661

Note: All emergency exits must remain accessible during busness hours.

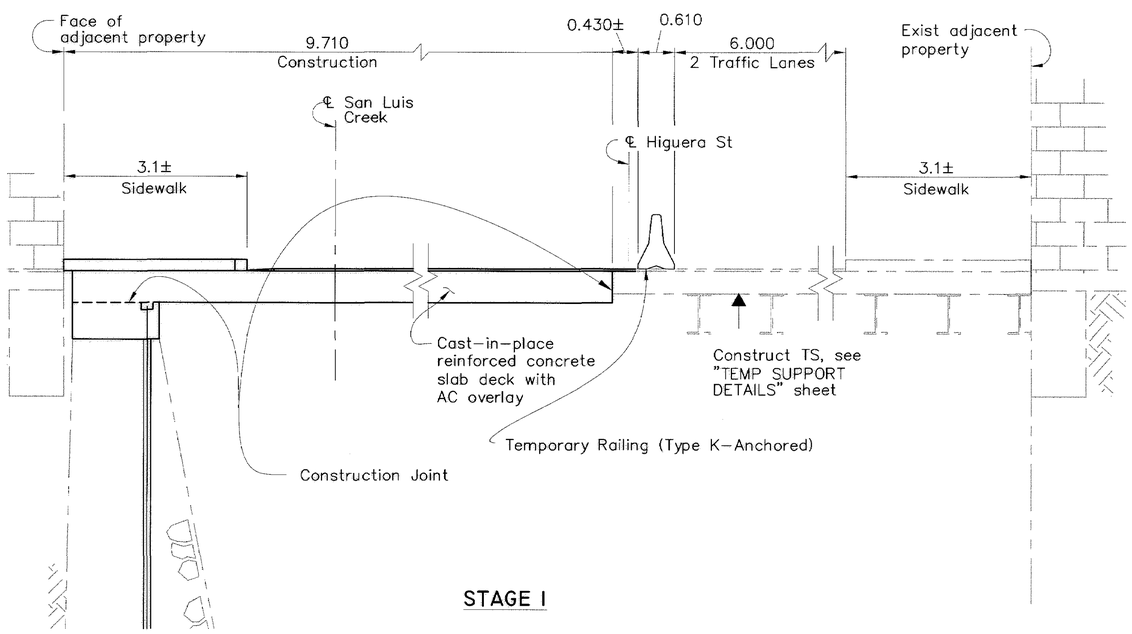

STAGE 1

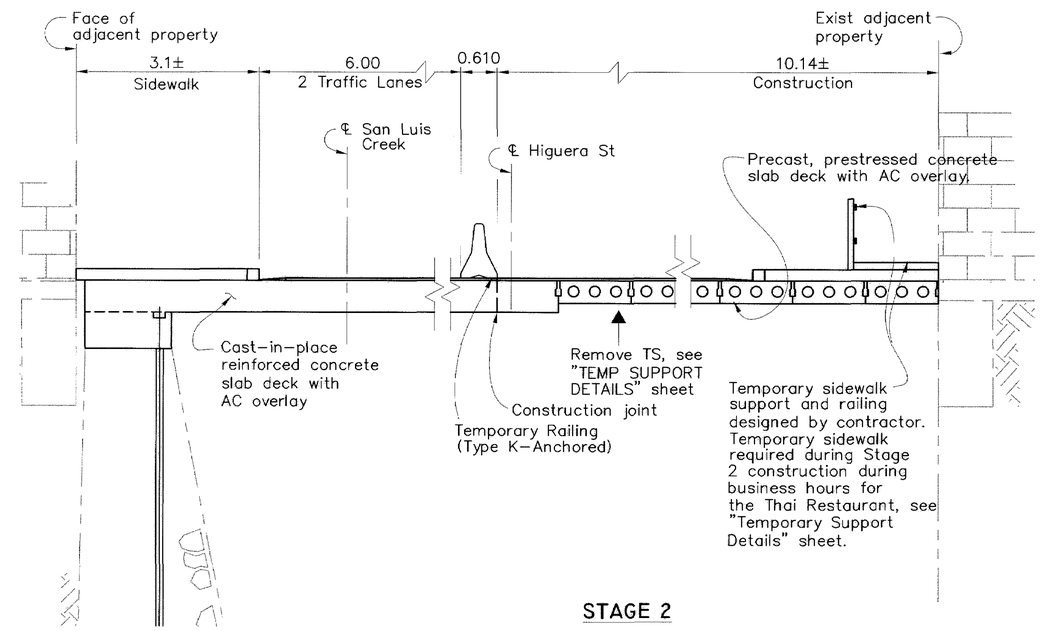

STAGE 2

SECTION F-F
Scale: 1:50

The contractor shall verify all controlling field dimensions before ordering or fabricating any materials.

All dimensions are in meters unless otherwise noted.

CITY OF SAN LUIS OBISPO

HIGUERA STREET BRIDGE REPLACEMENT

FOR REDUCED PLANS ORIGINAL SCALE IS IN MILLIMETERS 0 20 40 60 80 100

APPROVED BY
CITY ENGINEER

DATE	3/2000
SCALE	As Noted
DESIGNED BY	R.F.
DRAWN BY	R.D., K.W.
CHECKED BY	R.R.
APPROVED BY	
UTILITIES DEPARTMENT	

CONSTRUCTION STAGING DETAILS NO. 3

SPECIFICATION NO. 9367
FILE NO./LOCATION 0060 B
SHEET 26 OF 41

N:\MKSRVR1\MK PROJECTS\1997\97017.00 HIGUERA STREET BRIDGE REHAB\DRAWINGS (NOVEMBER 1999)\BRIDGE DRAWINGS (11-23-99)\97017-SC.dwg 1/18/00

DIST	COUNTY	ROUTE	POST MILES TOTAL PROJECT	SHEET NO.	TOTAL SHEETS
5	SLO		–	26	41

REGISTERED CIVIL ENGINEER

PLANS APPROVAL DATE

REGISTERED PROFESSIONAL ENGINEER
Ronald L. Rivett
No. 31,269
EXP. 12/31/00
CIVIL
STATE OF CALIFORNIA

MARTIN & KANE, Inc.
2200-B DOUGLAS BLVD. #150
ROSEVILLE • CA 95661

Note: All emergency exits must remain accessible during busness hours.

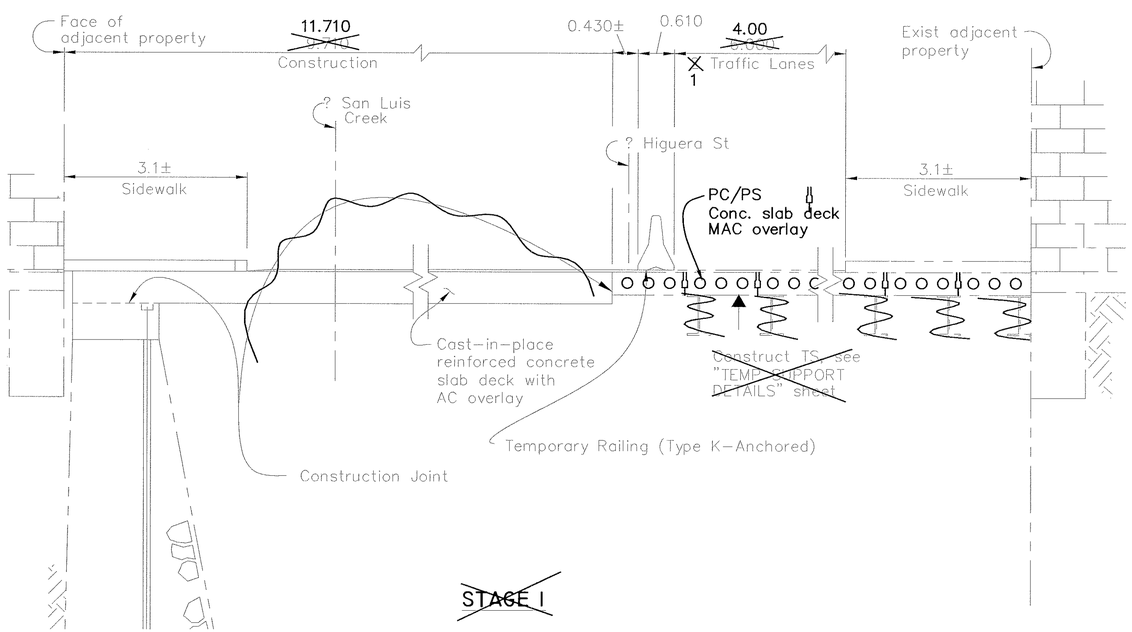

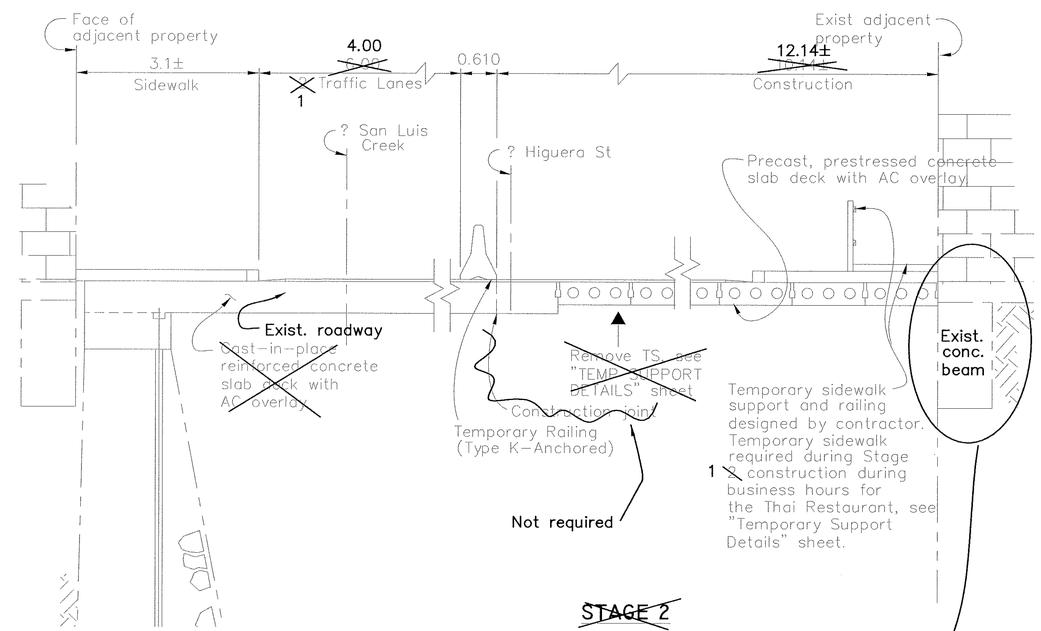

SECTION F-F
Scale: 1:50

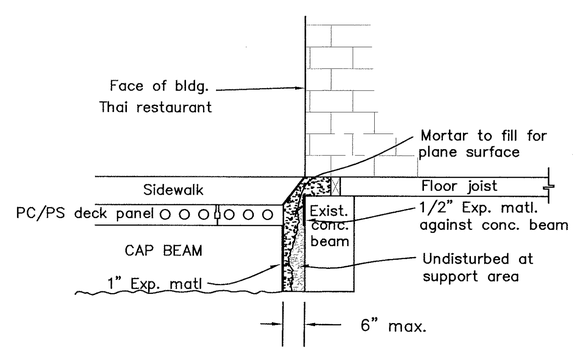

TYP. BOTH SIDES

The contractor shall verify all controlling field dimensions before ordering or fabricating any materials.

All dimensions are in meters unless otherwise noted.

RECORD DRAWING
DATE: 3/01/02 BY: SR

N:\MKSRVR1\MK PROJECTS\1997\97017.00 HIGUERA STREET BRIDGE REHAB\DRAWINGS (NOVEMBER 1999)\BRIDGE DRAWINGS (11-23-99)\97017-SC.dwg 1/18/00

city of san luis obispo

HIGUERA STREET BRIDGE REPLACEMENT

FOR REDUCED PLANS ORIGINAL SCALE IS IN MILLIMETERS 0 20 40 60 80 100

APPROVED BY
CITY ENGINEER

DATE	3/2000
SCALE	As Noted
DESIGNED BY	R.F.
DRAWN BY	R.D., K.W.
CHECKED BY	R.R.
APPROVED BY	
UTILITIES DEPARTMENT	

CONSTRUCTION STAGING DETAILS NO. 3

SPECIFICATION NO. 9367
FILE NO./LOCATION 0060 B
SHEET 26R OF 41

DIST	COUNTY	ROUTE	POST MILES TOTAL PROJECT	SHEET NO.	TOTAL SHEETS
5	SLO		–	27	41

Ronald L. Rivett
REGISTERED CIVIL ENGINEER

4/5/00
PLANS APPROVAL DATE

REGISTERED PROFESSIONAL ENGINEER
Ronald L. Rivett
No. 31,269
EXP. 12/31/00
CIVIL
STATE OF CALIFORNIA

MARTIN & KANE, Inc.
2200-B DOUGLAS BLVD. #150
ROSEVILLE • CA 95661

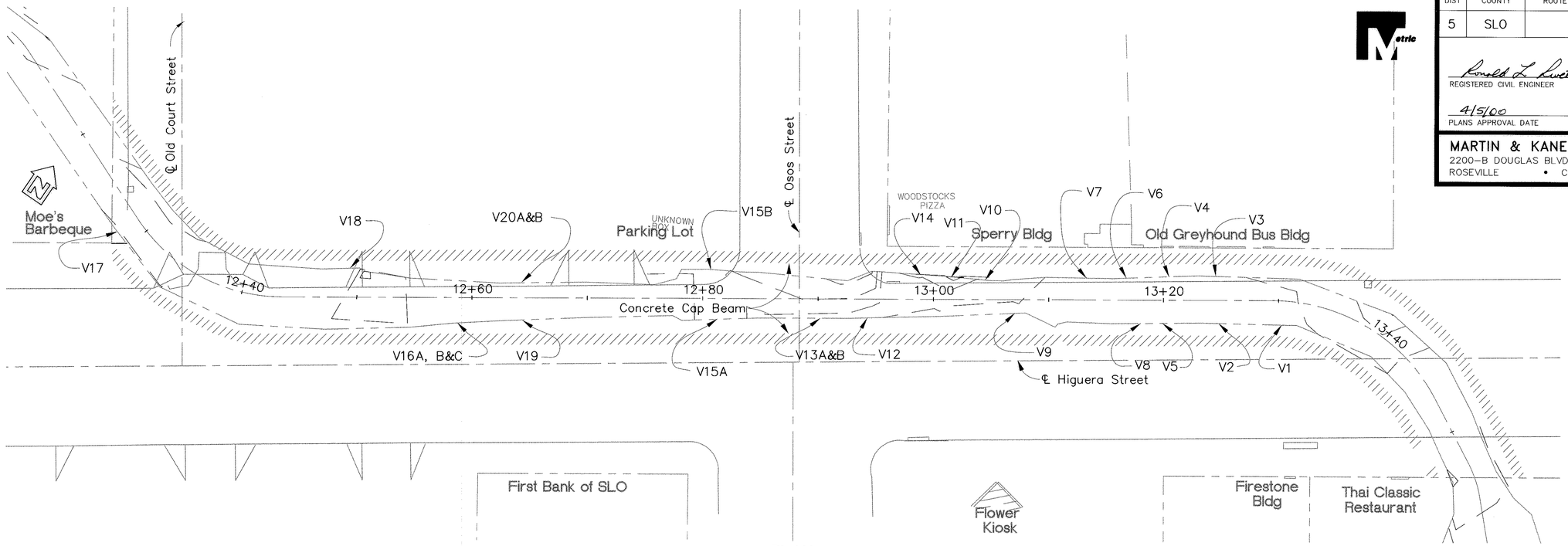

PLAN
Scale: 1:200

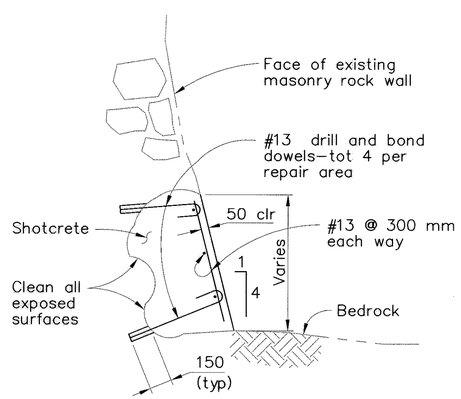

TYPE I REPAIR

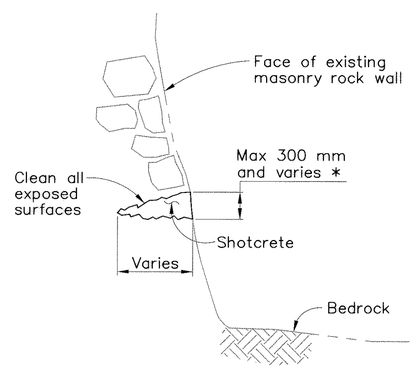

* for openings larger than 300 mm use "Type 1 repair."

TYPE II REPAIR

SHOTCRETE DETAILS
No Scale

Locations of Wall Voids					
Void	Approx. Station Number	Length (m)	Height (m)	Horizontal Depth(m)	Volume (Cu m)
1	13+30	0.61	0.30	0.46	0.08
2	13+26	0.46	0.30	0.30	0.04
3	13+25	2.44	0.76	0.61	1.13
4	13+19	2.74	1.07	1.22	3.57
5	13+20	1.22	0.30	0.46	0.17
6	13+17	2.74	1.68	0.61	2.80
7	13+15	2.13	0.91	1.68	3.27
8	13+16	1.37	0.76	0.61	0.64
9	13+07	1.22	0.30	0.46	0.17
10	13+02	2.90	1.07	0.61	1.88
11	13+00	1.22	1.37	0.30	0.51
12	12+95	0.91	0.46	0.30	0.13
13A	13+90	1.52	0.30	0.46	0.21
13B	13+90	0.30	0.30	0.61	0.06
14	12+98	2.13	0.91	0.61	1.19
15A	12+80	2.44	0.30	1.52	1.13
15B	12+80	2.44	0.30	0.46	0.34
16A	12+58	0.61	0.46	0.46	0.13
16B	12+58	0.46	0.61	0.30	0.08
16C	12+58	0.46	0.61	0.30	0.08
17	12+28	1.83	0.76	0.91	1.27
18	12+49	0.91	0.61	0.46	0.25
19	12+66	2.44	0.46	0.46	0.51
20A	12+65	0.91	0.30	0.61	0.17
20B	12+65	0.61	0.46	0.46	0.13

Legend:
denotes masonry rock wall
Vx denotes void number

Note:
1. Void locations are approximate.
2. Voids to be filled prior to stressing the masonry rock wall.

The contractor shall verify all controlling field dimensions before ordering or fabricating any materials.

All dimensions are in meters unless otherwise noted.

N:\MKSRVR1\MK PROJECTS\1997\97017.00 HIGUERA STREET BRIDGE REHAB\100% Submittal\97017-WV.dwg 1/18/00

CITY OF SAN LUIS OBISPO

HIGUERA STREET BRIDGE REPLACEMENT

FOR REDUCED PLANS ORIGINAL SCALE IS IN MILLIMETERS 0 20 40 60 80 100

APPROVED BY
CITY ENGINEER

DATE	3/2000
SCALE	As Noted
DESIGNED BY	R.F.
DRAWN BY	R.D., K.W.
CHECKED BY	R.R.
APPROVED BY UTILITIES DEPARTMENT	

VOID LOCATION PLAN

SPECIFICATION NO. 9367
FILE NO./LOCATION 00600 B
SHEET 27 OF 41

DIST	COUNTY	ROUTE	POST MILES TOTAL PROJECT	SHEET NO.	TOTAL SHEETS
5	SLO		-	28	41

Ronald L. Rivett
REGISTERED CIVIL ENGINEER

4/5/00
PLANS APPROVAL DATE

REGISTERED PROFESSIONAL ENGINEER Ronald L. Rivett No. 31,269 EXP. 12/31/00 CIVIL STATE OF CALIFORNIA

MARTIN & KANE, Inc.
2200-B DOUGLAS BLVD, #150
ROSEVILLE • CA 95661

Notes:

1. Existing girders are shown in approximate location.
2. Contractor shall field verify existing girder locations before instalation of tiedowns.
3. Tiedowns shall be evenly spaced between ℄ of existing girders.
4. Tiedowns shall be spaced between 2.5 min and 3.0 max along existing abutment.
5. Sectional dimensions are taken along ℄ of San Luis Creek.
6. Insure that the new tiedowns do not conflict with the three existing tiedowns from test programs. Test program tiedowns are not to be used for final construction.
7. Location of existing tiedowns in the north abutment are approximately at bridge stations 12+71.12, 12+76.29 and offset 2.00 North from ℄ San Luis Creek
8. "Installation Procedure for Tiedown Anchors" are on the "Temporary Support Details" sheet.

The contractor shall verify all controlling field dimensions before ordering or fabricating any materials.

Legend:

Limits of bridge removal

▪ Tiedown location (approximate) – "A" Shaft

X Tiedown location (approximate) – "B" Shaft

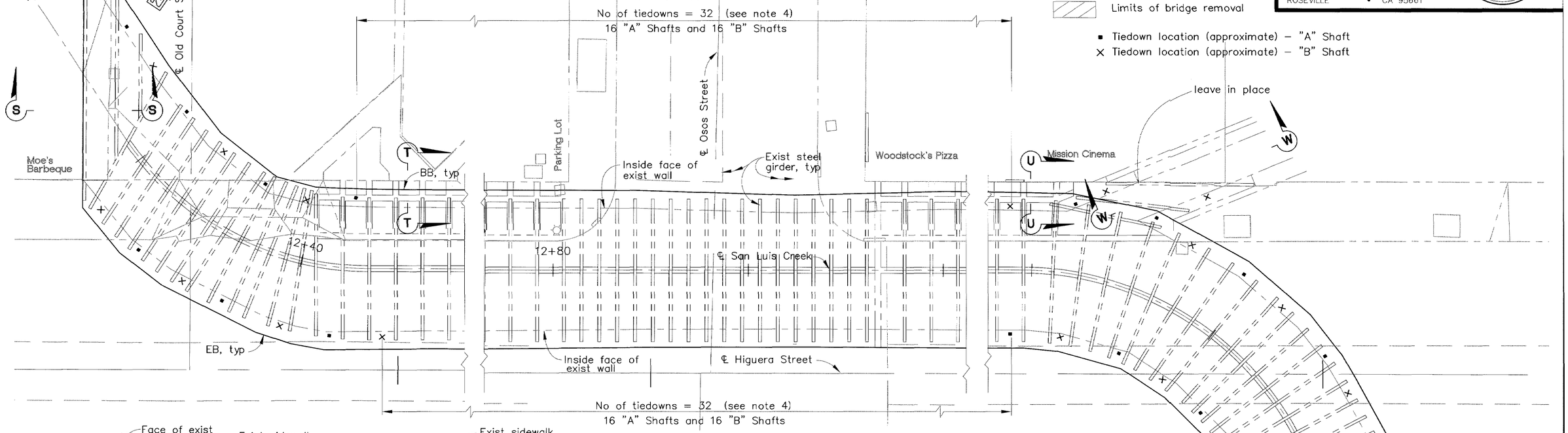

PLAN
1:100

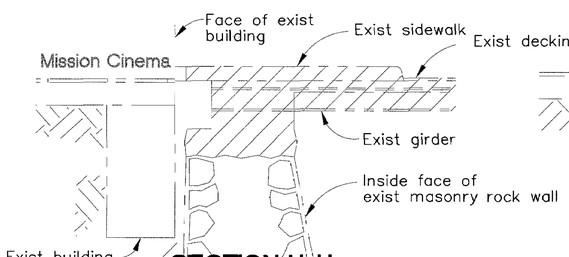

SECTION U-U
1:40

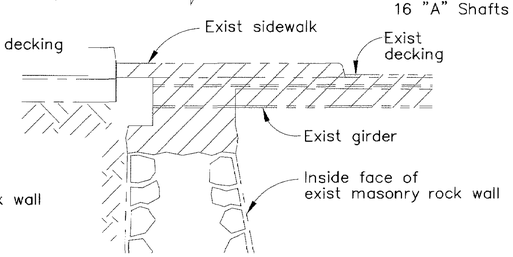

SECTION T-T
1:40

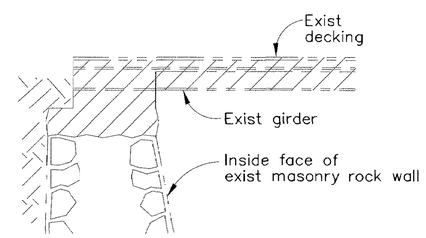

SECTION V-V
1:40

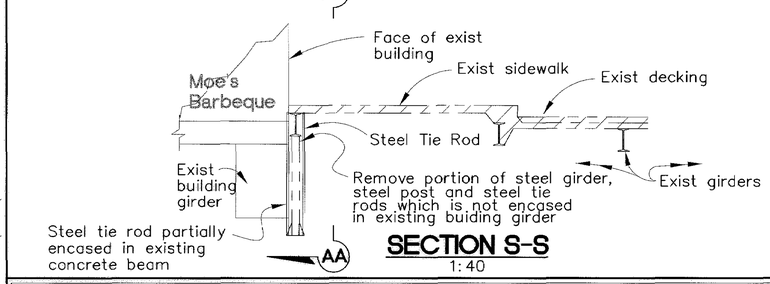

SECTION S-S
1:40

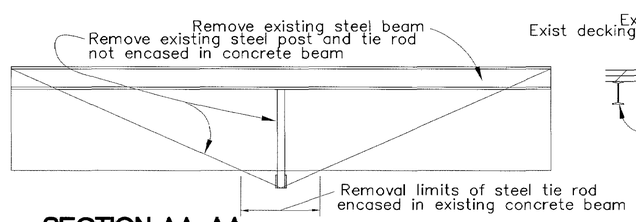

SECTION AA-AA
1:40

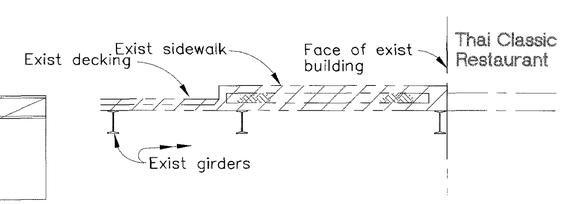

SECTION X-X
1:40

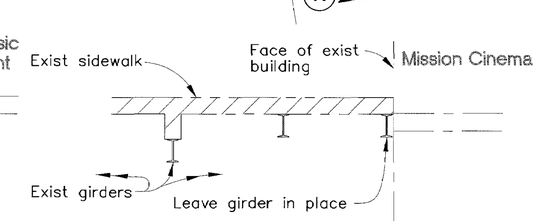

SECTION W-W
1:40

All dimensions are in meters unless otherwise noted.

City of San Luis Obispo

HIGUERA STREET BRIDGE REPLACEMENT

FOR REDUCED PLANS ORIGINAL SCALE IS IN MILLIMETERS 0 20 40 60 80 100

APPROVED BY

CITY ENGINEER

DATE	3/2000
SCALE	As Noted
DESIGNED BY	R.F.
DRAWN BY	R.D., K.W.
CHECKED BY	R.R.
APPROVED BY	UTILITIES DEPARTMENT

EXISTING GIRDER LAYOUT AND TIEDOWN ANCHOR LOCATIONS

SPECIFICATION NO. 9367

FILE NO./LOCATION 0060 B

SHEET 28 OF 41

N:\MKSRVR1\MK PROJECTS\1997\97017.00 HIGUERA STREET BRIDGE REHAB\100% Submittal\97017-EG.dwg 3-17-00

DIST	COUNTY	ROUTE	POST MILES TOTAL PROJECT	SHEET NO.	TOTAL SHEETS
5	SLO		-	28	41

REGISTERED CIVIL ENGINEER

PLANS APPROVAL DATE

REGISTERED PROFESSIONAL ENGINEER Ronald L. Rivetti No. 31,269 EXP. 12/31/00 CIVIL STATE OF CALIFORNIA

MARTIN & KANE, Inc.
2200-B DOUGLAS BLVD. #150
ROSEVILLE • CA 95661

Notes:

1. Existing girders are shown in approximate location.
2. Contractor shall field verify existing girder locations before instalation of tiedowns.
3. Tiedowns shall be evenly spaced between ? of existing girders.
4. Tiedowns shall be spaced between 2.5 min and 3.0 max along existing abutment.
5. Sectional dimensions are taken along ? of San Luis Creek.
6. Insure that the new tiedowns do not conflict with the three existing tiedowns from test programs. Test program tiedowns are not to be used for final construction.
7. Location of existing tiedowns in the north abutment are approximately at bridge stations 12+71.12, 12+76.29 and offset 2.00 North from ? San Luis Creek
8. "Installation Procedure for Tiedown Anchors" are on the "Temporary Support Details" sheet.

The contractor shall verify all controlling field dimensions before ordering or fabricating any materials.

Metric

Legend:

Limits of bridge removal

Tiedown location (approximate) – Shaft "B" Tricon thru wall

Tiedown location (approximate) – Shaft "A" Diamond core thru wall

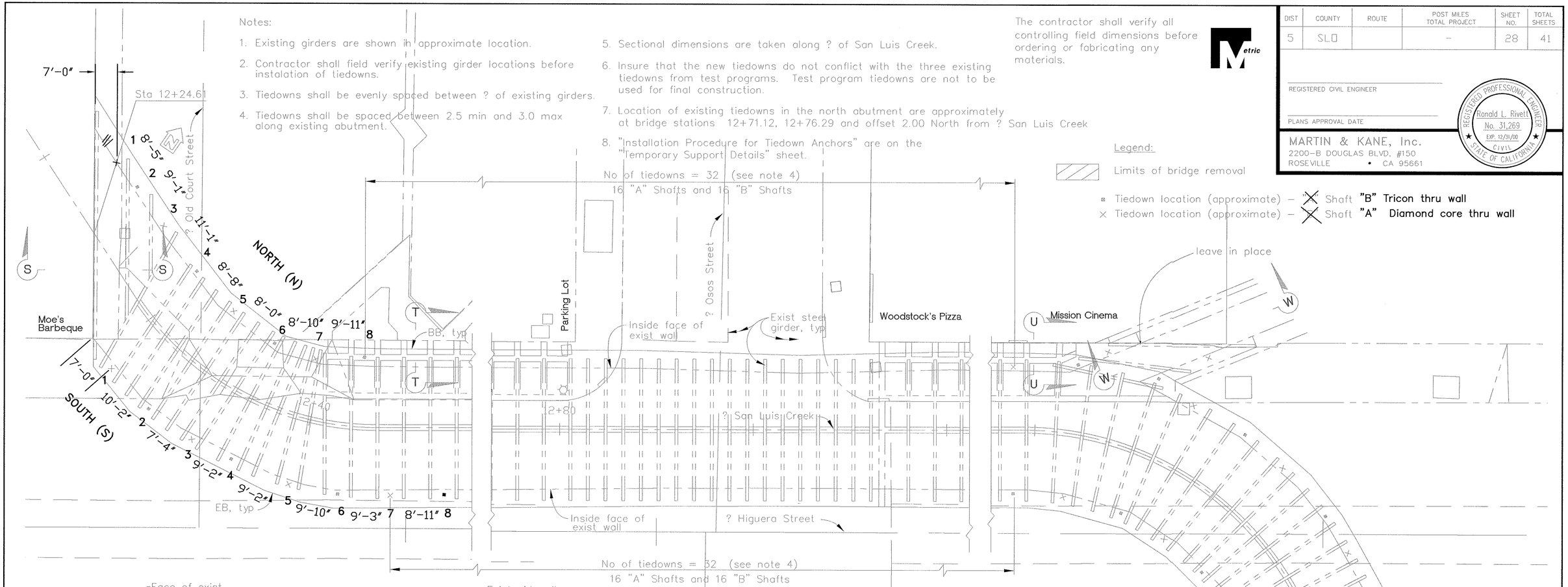

RECORD DRAWING DATE 3/1/02 BY: JR

All dimensions are in meters unless otherwise noted.

city of san luis obispo

HIGUERA STREET BRIDGE REPLACEMENT

FOR REDUCED PLANS ORIGINAL SCALE IS IN MILLIMETERS 0 20 40 60 80 100

APPROVED BY

CITY ENGINEER

DATE	3/2000
SCALE	As Noted
DESIGNED BY	R.F.
DRAWN BY	R.D., K.W.
CHECKED BY	R.R.
APPROVED BY	
UTILITIES DEPARTMENT	

EXISTING GIRDER LAYOUT AND TIEDOWN ANCHOR LOCATIONS

SPECIFICATION NO. 9367

FILE NO./LOCATION 0060 B

SHEET 28R OF 41

DIST	COUNTY	ROUTE	POST MILES TOTAL PROJECT	SHEET NO.	TOTAL SHEETS
5	SLO		–	29	41

Ronald L. Rivett
REGISTERED CIVIL ENGINEER

4/5/00
PLANS APPROVAL DATE

REGISTERED PROFESSIONAL ENGINEER
Ronald L. Rivett
No. 31,269
EXP. 12/31/00
CIVIL
STATE OF CALIFORNIA

MARTIN & KANE, Inc.
2200-B DOUGLAS BLVD, #150
ROSEVILLE • CA 95661

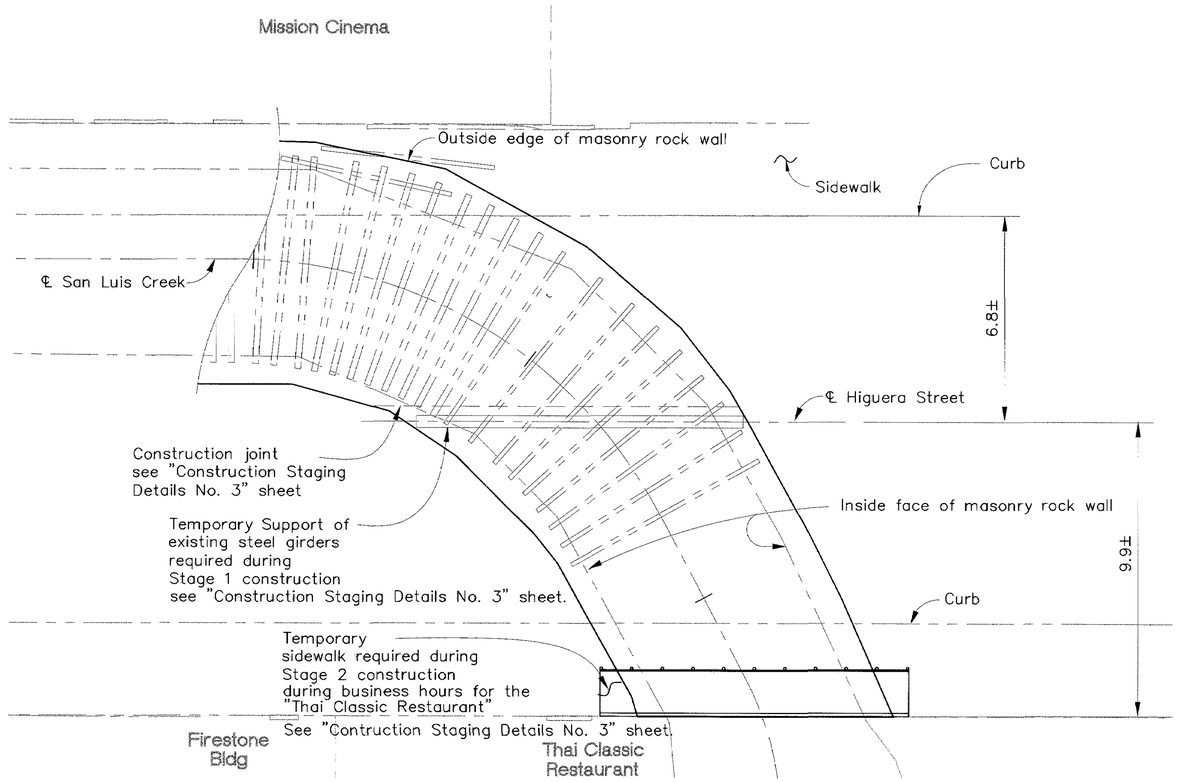

PART PLAN
Scale: 1:100

Note: For clarity not all existing steel girders are shown.

INSTALLATION PROCEDURE FOR TIEDOWN ANCHORS

1. Install pipe sleeve collar from top of masonry rock wall to above sidewalk/street grade to control and direct water up to the surface during the drilling operation.
2. Drill 100 mm diameter shafts at 2.5 meters minimum to 3.0 meters maximum on center (in between existing beams), or as directed by Engineer.
3. Shafts to be drilled alternately in "A" and "B" sequence. "A" shafts must be drilled and filled prior to start of drilling "B" shafts located immediately adjacent to "A" shaft.
4. Drilling of "A" shafts shall be performed with the diamond-core drill bit into the masonry wall to maximize spread of grout. Use only the tri-cone drill bit into bedrock soil beneath the wall in order to vacate cuttings in shafts by flushing with water. Drilling of "B" shafts may be with the use of tri-cone drill bit the full depth of the shaft. (Note: masonry wall may be drilled with diamond core for every shaft.)
5. Embedment depth into bedrock to be 3.0 meters minimum.
6. Place rod into shaft as soon as shaft is drilled and cleaned out. Provide centralizers at 3.0 meters o.c. maximum and one within 0.6 meters of bottom of shaft.
7. Provide PVC bond breaker sheathing to the portion of the rod in masonry rock wall. Ends of pvc sheathing to be sealed prior to grouting to prevent contamination.
8. Encase full length of shaft with 20.6 MPa neat cement/grout, with an approved fluidifier as required.
9. Test for compression strength when cement/grout has cured a minimum of 3 days.
10. After 20.6 MPa strength is obtained, tension test anchor rods per Specifications and Geotechnical Engineer's recommendations. The test set-up apparatus may bear on top of existing masonry wall. Proof test load shall be 150% of design load in increasing increments of 25% (cycling not required) up to test load. After successful testing release load on rod.
11. Repeat until all anchors are tested and certified.
12. Form, place rebar and provide stressing pocket in new concrete cap beam at top of existing wall.
13. After concrete cap beam has attained its design strength, stress anchor rods to design load and lock-off.
14. Grout annular space between rod and sheathing fully.
15. Fill anchor pocket in concrete cap beam with concrete/non-shrink grout.

The contractor shall verify all controlling field dimensions before ordering or fabricating any materials.

All dimensions are in meters unless otherwise noted.

City of San Luis Obispo

HIGUERA STREET BRIDGE REPLACEMENT

FOR REDUCED PLANS ORIGINAL SCALE IS IN MILLIMETERS 0 20 40 60 80 100

APPROVED BY
CITY ENGINEER

DATE	3/2000
SCALE	As Noted
DESIGNED BY	R.F.
DRAWN BY	R.D., K.W.
CHECKED BY	R.R.
APPROVED BY	UTILITIES DEPARTMENT

TEMPORARY SUPPORT DETAILS

SPECIFICATION NO. 9367
FILE NO./LOCATION 0060 E
SHEET 29 OF 41

N:\MKSRVR1\MK PROJECTS\199?\97017.00 HIGUERA STREET BRIDGE REHAB\100% Submittal\97017-TS.dwg 3-17-00

DIST	COUNTY	ROUTE	POST MILES TOTAL PROJECT	SHEET NO.	TOTAL SHEETS
5	SLO		–	29	41

REGISTERED CIVIL ENGINEER

PLANS APPROVAL DATE

REGISTERED PROFESSIONAL ENGINEER Ronald L. Rivett No. 31,269 EXP. 12/31/00 CIVIL STATE OF CALIFORNIA

MARTIN & KANE, Inc.
2200-B DOUGLAS BLVD. #150
ROSEVILLE • CA 95661

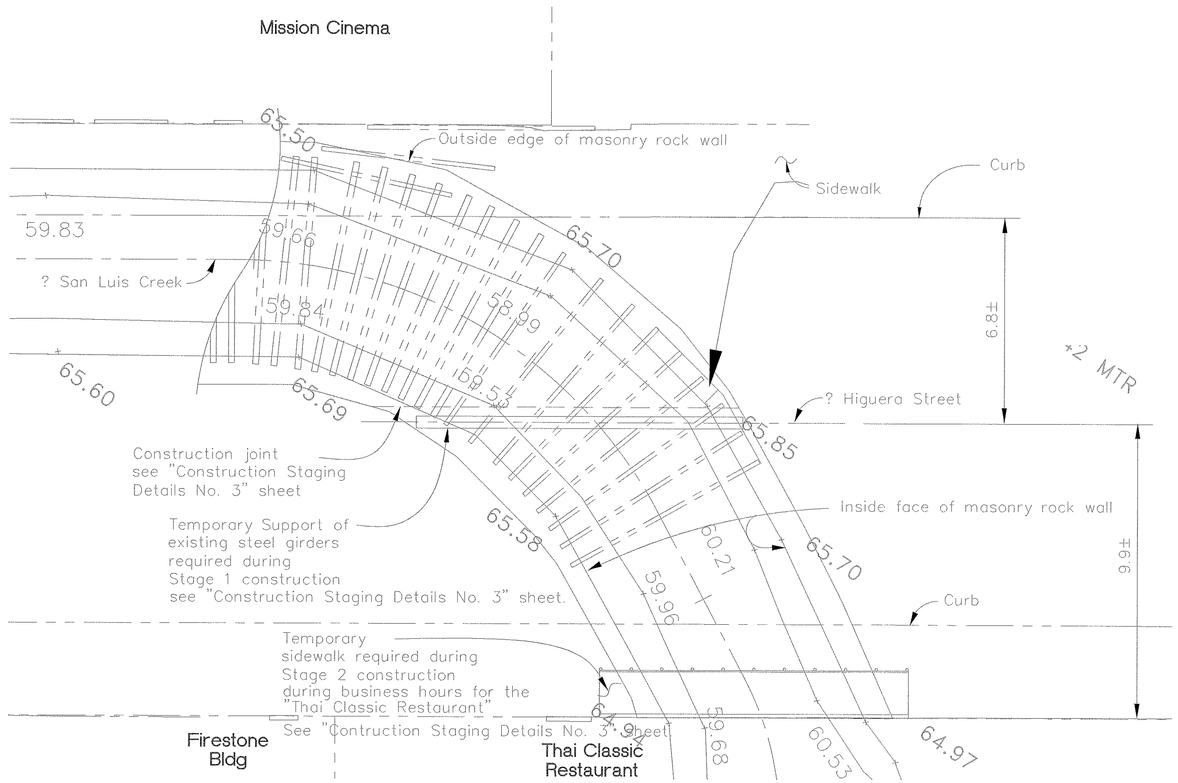

PART PLAN
Scale: 1:100

Note: For clarity not all existing steel girders are shown.

CCO #5 REVISED NOTE 5

INSTALLATION PROCEDURE FOR TIEDOWN ANCHORS

1. Install pipe sleeve collar from top of masonry rock wall to above sidewalk/street grade to control and direct water up to the surface during the drilling operation.
2. Drill 100 mm diameter shafts at 2.5 meters minimum to 3.0 meters maximum on center (in between existing beams), or as directed by Engineer.
3. Shafts to be drilled alternately in "A" and "B" sequence. "A" shafts must be drilled and filled prior to start of drilling "B" shafts located immediately adjacent to "A" shaft.
4. Drilling of "A" shafts shall be performed with the diamond-core drill bit into the masonry wall to maximize spread of grout. Use only the tri-cone drill bit into bedrock soil beneath the wall in order to vacate cuttings in shafts by flushing with water. Drilling of "B" shafts may be with the use of tri-cone drill bit the full depth of the shaft. (Note: masonry wall may be drilled with diamond core for every shaft.)
5. Embedment depth into bedrock to be ~~3.0~~ 5.0 meters minimum. **or directed by the Engineer**
6. Place rod into shaft as soon as shaft is drilled and cleaned out. Provide centralizers at 3.0 meters o.c. maximum and one within 0.6 meters of bottom of shaft.
7. Provide PVC bond breaker sheathing to the portion of the rod in masonry rock wall. Ends of pvc sheathing to be sealed prior to grouting to prevent contamination.
8. Encase full length of shaft with 20.6 MPa neat cement/grout, with an approved fluidifier as required.
9. Test for compression strength when cement/grout has cured a minimum of 3 days.
10. After 20.6 MPa strength is obtained, tension test anchor rods per Specifications and Geotechnical Engineer's recommendations. The test set-up apparatus may bear on top of existing masonry wall. Proof test load shall be 150% of design load in increasing increments of 25% (cycling not required) up to test load. After successful testing release load on rod.
11. Repeat until all anchors are tested and certified.
12. Form, place rebar and provide stressing pocket in new concrete cap beam at top of existing wall.
13. After concrete cap beam has attained its design strength, stress anchor rods to design load and lock-off.
14. Grout annular space between rod and sheathing fully.
15. Fill anchor pocket in concrete cap beam with concrete/non-shrink grout.

The contractor shall verify all controlling field dimensions before ordering or fabricating any materials.

RECORD DRAWING
DATE: 3/1/02 BY: SR

All dimensions are in meters unless otherwise noted.

N:\MKSRVR1\WK PROJECTS\1997\97017.00 HIGUERA STREET BRIDGE REHAB\100% Submittal\97017-TS.dwg 3-17-00

city of san luis obispo

HIGUERA STREET BRIDGE REPLACEMENT

FOR REDUCED PLANS ORIGINAL SCALE IS IN MILLIMETERS 0 20 40 60 80 100

APPROVED BY
CITY ENGINEER

DATE	3/2000
SCALE	As Noted
DESIGNED BY	R.F.
DRAWN BY	R.D., K.W.
CHECKED BY	R.R.
APPROVED BY UTILITIES DEPARTMENT	

TEMPORARY SUPPORT DETAILS

SPECIFICATION NO. 9367
FILE NO./LOCATION 0060 B
SHEET 29R OF 41

DIST	COUNTY	ROUTE	POST MILES TOTAL PROJECT	SHEET NO.	TOTAL SHEETS
5	SLO		–	30	41

Ronald L. Rivett
REGISTERED CIVIL ENGINEER

4/5/00
PLANS APPROVAL DATE

REGISTERED PROFESSIONAL ENGINEER Ronald L. Rivett No. 31,269 EXP. 12/31/00 CIVIL STATE OF CALIFORNIA

MARTIN & KANE, Inc.
2200-B DOUGLAS BLVD, #150
ROSEVILLE • CA 95661

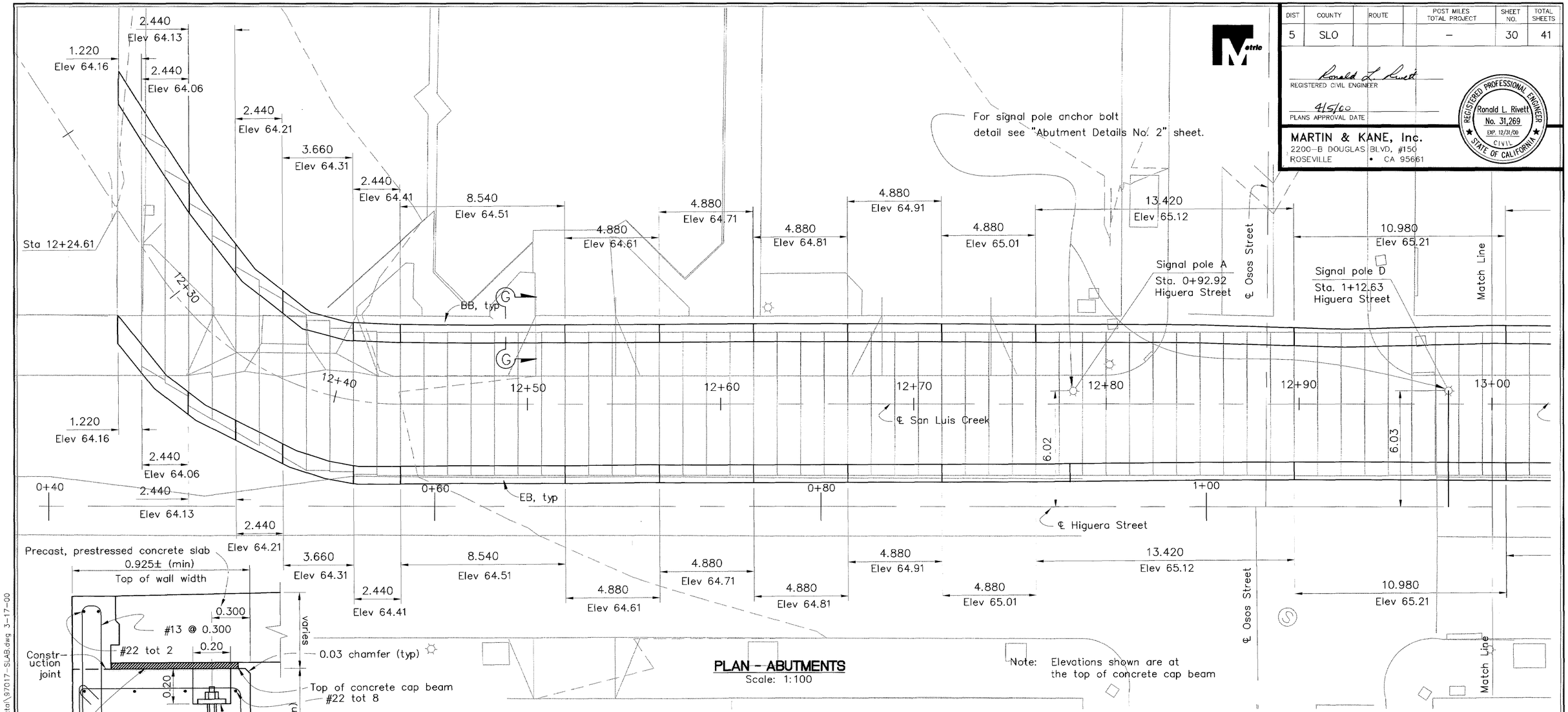

PLAN – ABUTMENTS
Scale: 1:100

Note: Elevations shown are at the top of concrete cap beam

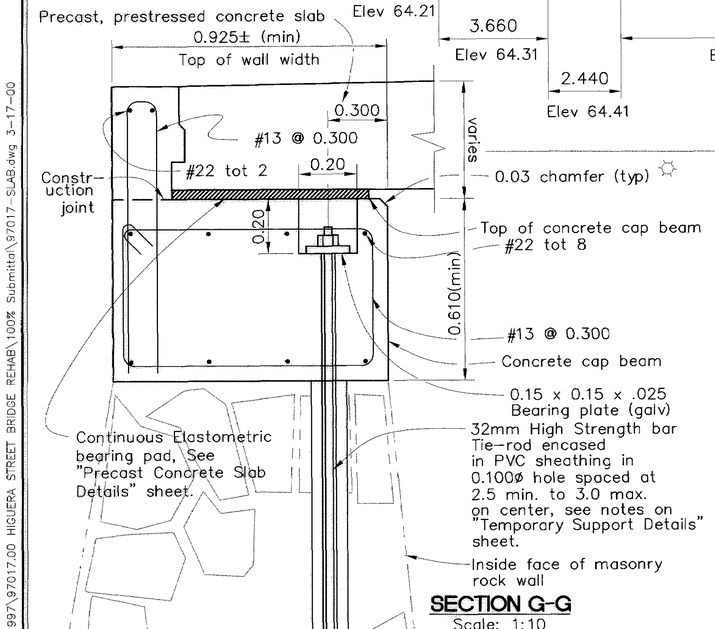

SECTION G-G
Scale: 1:10

The contractor shall verify all controlling field dimensions before ordering or fabricating any materials.

All dimensions are in meters unless otherwise noted

City of San Luis Obispo

HIGUERA STREET BRIDGE REPLACEMENT

APPROVED BY
CITY ENGINEER

DATE	3/2000
SCALE	As Noted
DESIGNED BY	R.F.
DRAWN BY	R.D., K.W.
CHECKED BY	R.R.
APPROVED BY UTILITIES DEPARTMENT	

ABUTMENT DETAILS NO. 1

SPECIFICATION NO. 9367
FILE NO./LOCATION 0060 B
SHEET 30 OF 41

MKSERVER\PROJECTS\1997\97017.00 HIGUERA STREET BRIDGE REHAB\100% Submittal\97017-SLAB.dwg 3-17-00

DIST	COUNTY	ROUTE	POST MILES TOTAL PROJECT	SHEET NO.	TOTAL SHEETS
5	SLO		–	30	41

REGISTERED CIVIL ENGINEER

PLANS APPROVAL DATE

REGISTERED PROFESSIONAL ENGINEER Ronald L. Rivett No. 31,269 EXP. 12/31/00 CIVIL STATE OF CALIFORNIA

MARTIN & KANE, Inc.
2200-B DOUGLAS BLVD, #150
ROSEVILLE • CA 95661

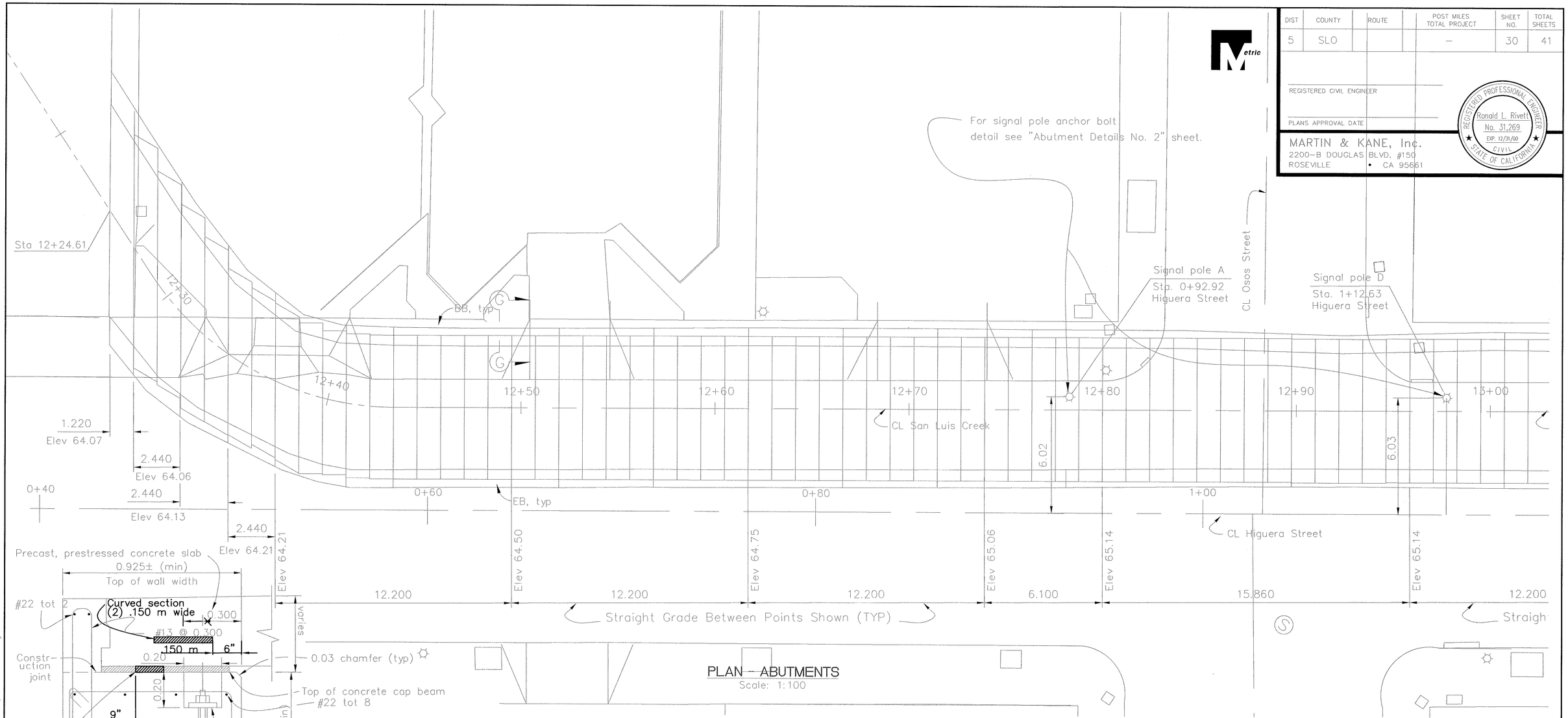

PLAN – ABUTMENTS
Scale: 1:100

NOTE: ELEVATIONS SHOWN ARE AT THE TOP OF CONCRETE CAP BEAM

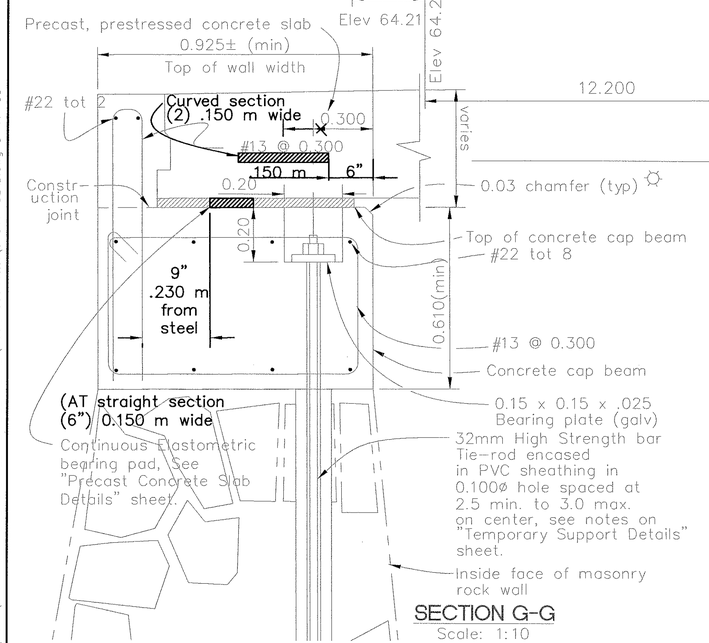

SECTION G-G
Scale: 1:10

THIS SHEET REFLECTS REVISED ELEV. FOR CCO 11

REVISION DATE: AUGUST 15, 2000

The contractor shall verify all controlling field dimensions before ordering or fabricating any materials.

RECORD DRAWING
DATE 3/1/02 BY SR

All dimensions are in meters unless otherwise noted

city of san luis obispo

HIGUERA STREET BRIDGE REPLACEMENT

APPROVED BY
CITY ENGINEER

DATE	3/2000
SCALE	As Noted
DESIGNED BY	R.F.
DRAWN BY	R.D., K.W.
CHECKED BY	R.R.
APPROVED BY UTILITIES DEPARTMENT	

ABUTMENT DETAILS NO. 1

SPECIFICATION NO. 9367
FILE NO./LOCATION 0060 B
SHEET 30R OF 41

M:\SERVER\PROJECTS\1997\97017.00 HIGUERA STREET BRIDGE REHAB\100% Submittal\97017-SLAB.dwg 3-17-00

DIST	COUNTY	ROUTE	POST MILES TOTAL PROJECT	SHEET NO.	TOTAL SHEETS
5	SLO		–	31	41

REGISTERED CIVIL ENGINEER

4/5/00
PLANS APPROVAL DATE

REGISTERED PROFESSIONAL ENGINEER Ronald L. Rivett No. 31,269 EXP. 12/31/00 CIVIL STATE OF CALIFORNIA

MARTIN & KANE, Inc.
2200-B DOUGLAS BLVD, #150
ROSEVILLE • CA 95661

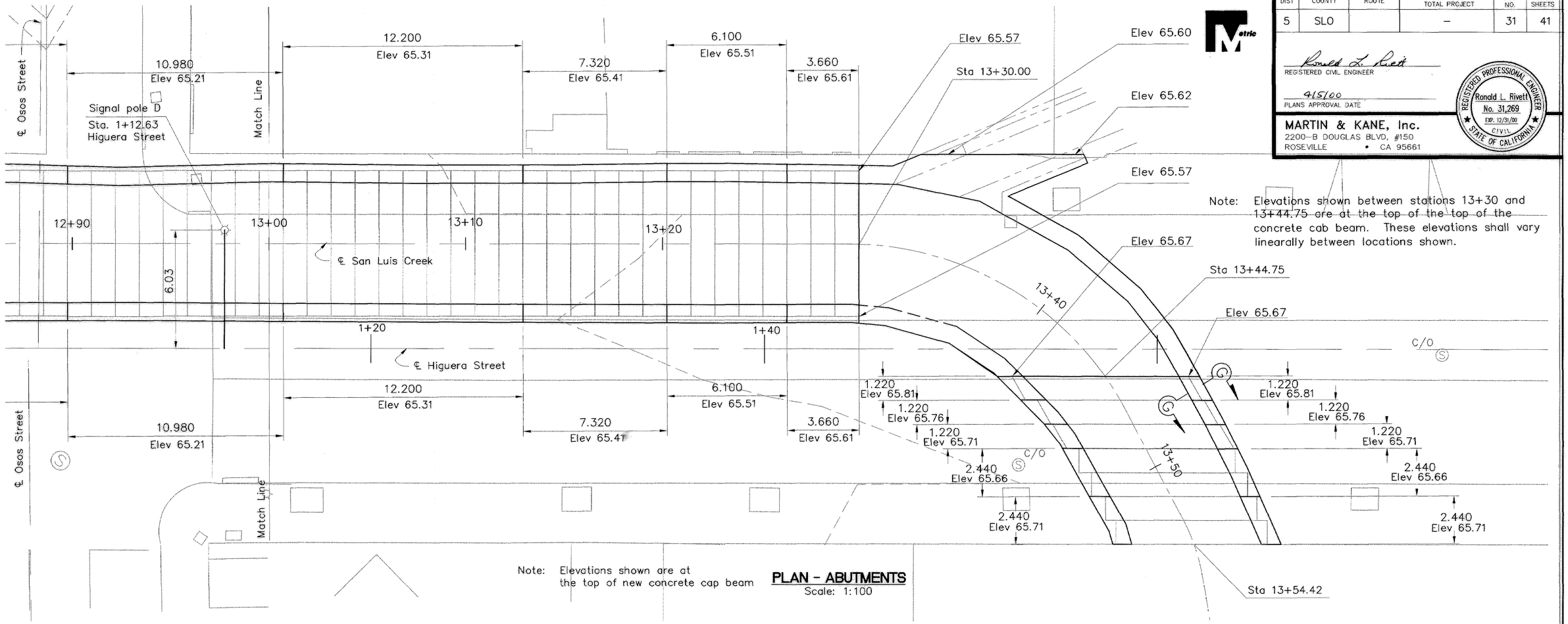

Note: Elevations shown between stations 13+30 and 13+44.75 are at the top of the top of the concrete cab beam. These elevations shall vary linearally between locations shown.

Note: Elevations shown are at the top of new concrete cap beam

PLAN - ABUTMENTS
Scale: 1:100

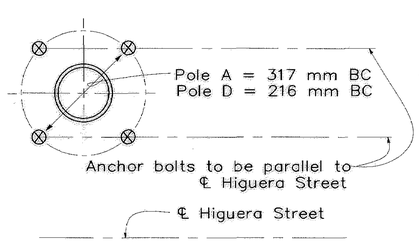

ANCHOR BOLT LAYOUT
No Scale

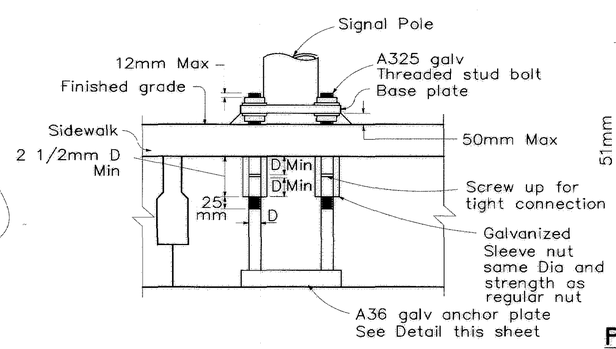

SIGNAL POLES A AND D ANCHOR BOLT DETAIL
No Scale

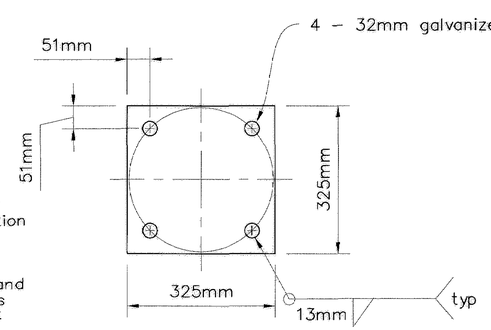

POLE A ANCHOR PLATE DETAIL
Mat'l: Galvanized Steel A36 Anchor Plate, 13mm thick
No Scale

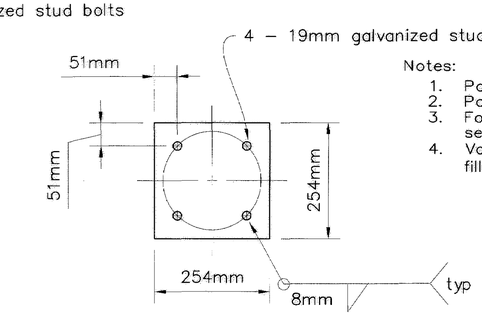

POLE D ANCHOR PLATE DETAIL
Mat'l: Galvanized Steel A36 Anchor Plate, 13mm thick
No Scale

Notes:
1. Pole A has 4 – 32mm A325 anchor bolts.
2. Pole D has 4 – 19mm A325 anchor bolts.
3. For location and details of signal poles A and D see "Traffic Signal and Lighting Plan" sheet.
4. Voids in "Precast Prestressed Slab" unit to be filled within 0.6m of "Anchor Plate".

The contractor shall verify all controlling field dimensions before ordering or fabricating any materials.

All dimensions are in meters unless otherwise noted

City of San Luis Obispo

HIGUERA STREET BRIDGE REPLACEMENT

APPROVED BY
CITY ENGINEER

DATE	3/2000
SCALE	As Noted
DESIGNED BY	R.F.
DRAWN BY	R.D., K.W.
CHECKED BY	R.R.
APPROVED BY UTILITIES DEPARTMENT	

ABUTMENT DETAILS NO. 2

SPECIFICATION NO. 9367
FILE NO./LOCATION 0060 B
SHEET 31 OF 41

MKSERVER\PROJECTS\1997\97017.00 HIGUERA STREET BRIDGE REHAB\100% Submittal\97017-SLAB.dwg 3-17-00

DIST	COUNTY	ROUTE	POST MILES TOTAL PROJECT	SHEET NO.	TOTAL SHEETS
5	SLO		–	31	41

REGISTERED CIVIL ENGINEER

PLANS APPROVAL DATE

REGISTERED PROFESSIONAL ENGINEER Ronald L. Rivett No. 31,269 EXP. 12/31/00 CIVIL STATE OF CALIFORNIA

MARTIN & KANE, Inc.
2200-B DOUGLAS BLVD. #150
ROSEVILLE • CA 95661

Metric

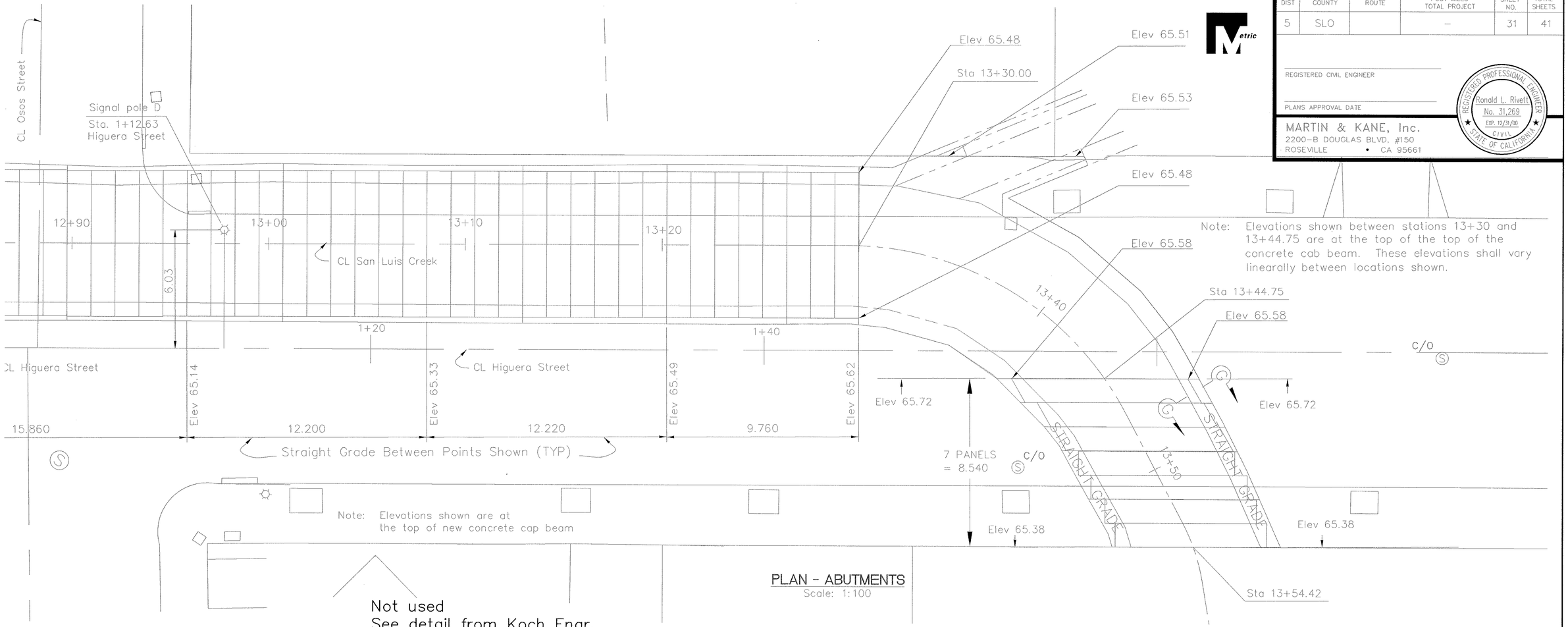

Note: Elevations shown between stations 13+30 and 13+44.75 are at the top of the top of the concrete cab beam. These elevations shall vary linearally between locations shown.

PLAN - ABUTMENTS
Scale: 1:100

Not used
See detail from Koch Engr.

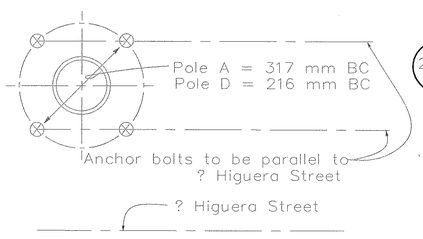

ANCHOR BOLT LAYOUT
No Scale

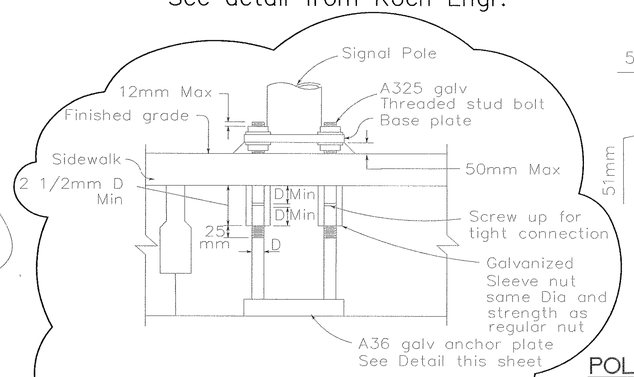

SIGNAL POLES A AND D ANCHOR BOLT DETAIL
No Scale

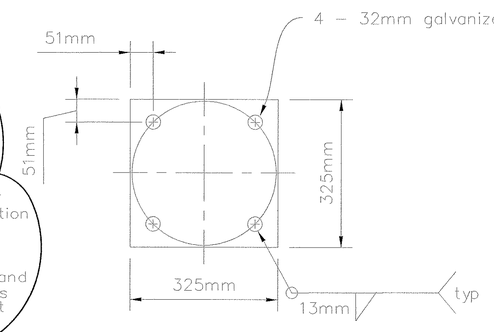

POLE A ANCHOR PLATE DETAIL
Mat'l: Galvanized Steel A36 Anchor Plate, 13mm thick
No Scale

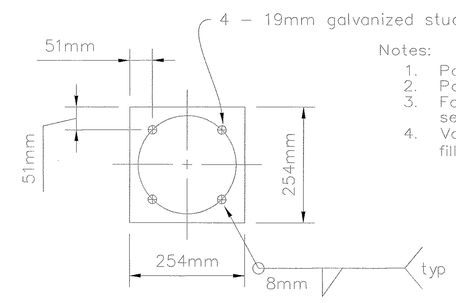

POLE D ANCHOR PLATE DETAIL
Mat'l: Galvanized Steel A36 Anchor Plate, 13mm thick
No Scale

Notes:
1. Pole A has 4 – 32mm A325 anchor bolts.
2. Pole D has 4 – 19mm A325 anchor bolts.
3. For location and details of signal poles A and D see "Traffic Signal and Lighting Plan" sheet.
4. Voids in "Precast Prestressed Slab" unit to be filled within 0.6m of "Anchor Plate".

The contractor shall verify all controlling field dimensions before ordering or fabricating any materials.

RECORD DRAWING
DATE: 3/1/02 BY: MR

REVISION DATE: JUNE 14, 2001

All dimensions are in meters unless otherwise noted

city of san luis obispo

HIGUERA STREET BRIDGE REPLACEMENT

APPROVED BY
CITY ENGINEER

DATE	3/2000
SCALE	As Noted
DESIGNED BY	R.F.
DRAWN BY	R.D., K.W.
CHECKED BY	R.R.
APPROVED BY	
UTILITIES DEPARTMENT	

ABUTMENT DETAILS NO. 2

SPECIFICATION NO. 9367
FILE NO./LOCATION 0060 B
SHEET 31R OF 41

MKSERVER\PROJECTS\1997\97017.00 HIGUERA STREET BRIDGE REHAB\100% Submittal\97017-SLAB.dwg 3-17-00

DIST	COUNTY	ROUTE	POST MILES TOTAL PROJECT	SHEET NO.	TOTAL SHEETS
5	SLO		–	32	41

REGISTERED CIVIL ENGINEER

4/5/00
PLANS APPROVAL DATE

REGISTERED PROFESSIONAL ENGINEER Ronald L. Rivett No. 31,269 EXP. 12/31/00 CIVIL STATE OF CALIFORNIA

MARTIN & KANE, Inc.
2200-B DOUGLAS BLVD, #150
ROSEVILLE • CA 95661

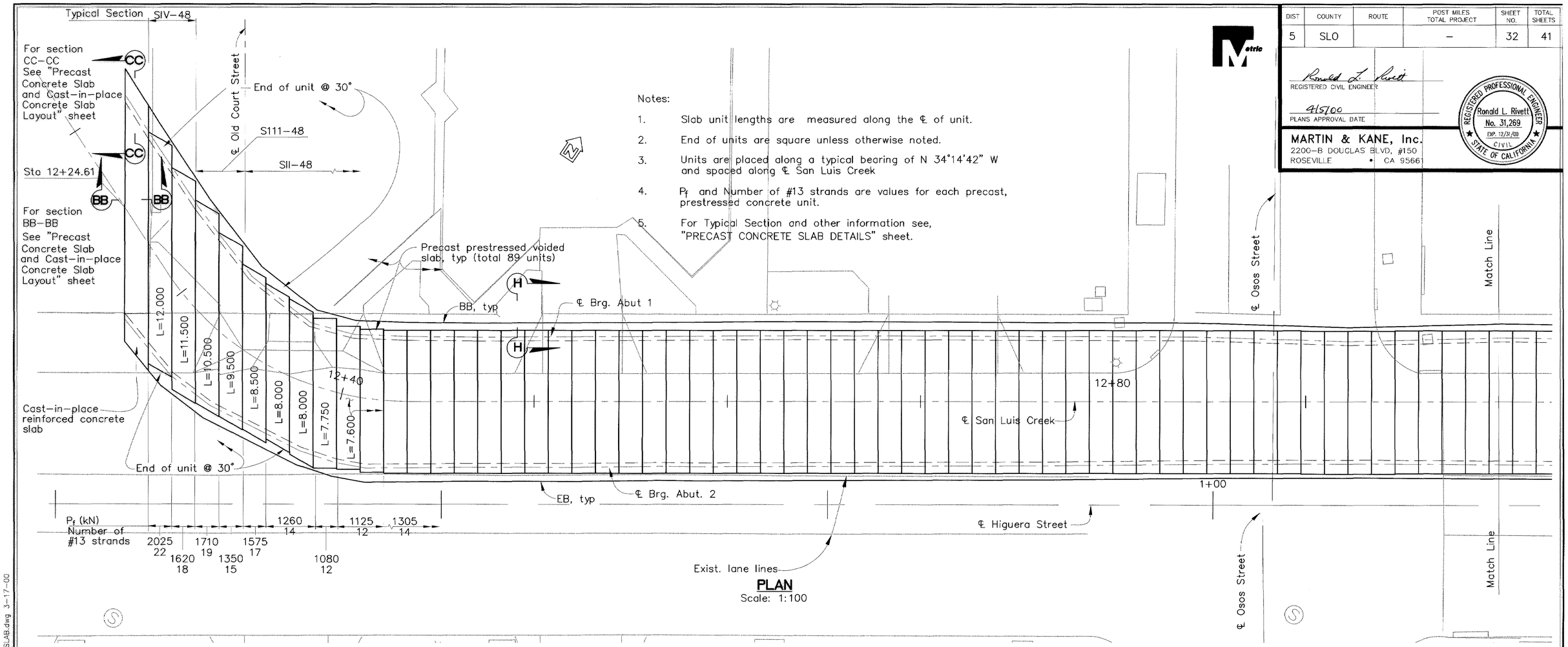

Notes:

1. Slab unit lengths are measured along the ℄ of unit.
2. End of units are square unless otherwise noted.
3. Units are placed along a typical bearing of N 34°14'42" W and spaced along ℄ San Luis Creek
4. P_f and Number of #13 strands are values for each precast, prestressed concrete unit.
5. For Typical Section and other information see, "PRECAST CONCRETE SLAB DETAILS" sheet.

PLAN
Scale: 1:100

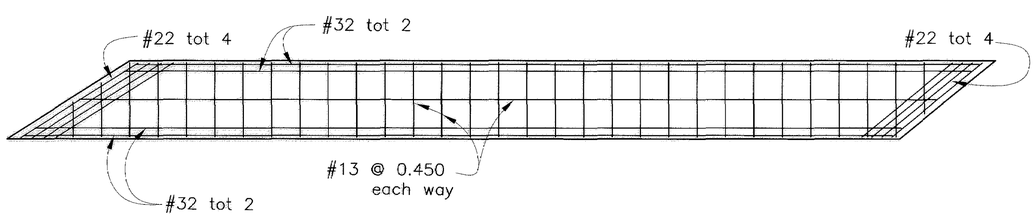

TOP SLAB REINFORCEMENT
Rotated 90° CCW

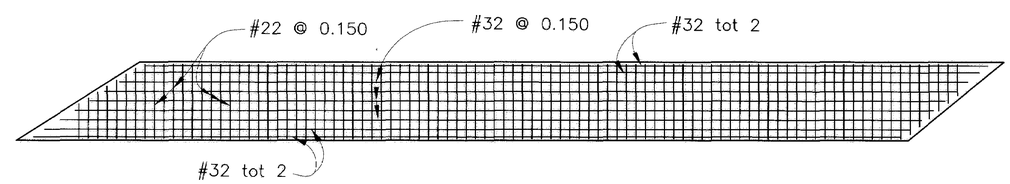

BOTTOM SLAB REINFORCEMENT
Rotated 90° CCW

REINFORCED CONCRETE SLAB AT MOE'S RESTAURANT
Scale: 1:50

The contractor shall verify all controlling field dimensions before ordering or fabricating any materials.

All dimensions are in meters unless otherwise noted

N:\MKSRVR1\PROJECTS\1997\97017.00 HIGUERA STREET BRIDGE REHAB\100% Submittal\97017-7-SLAB.dwg 3-17-00

CITY OF SAN LUIS OBISPO

HIGUERA STREET BRIDGE REPLACEMENT

FOR REDUCED PLANS ORIGINAL SCALE IS IN MILLIMETERS 0 20 40 60 80 100

APPROVED BY

CITY ENGINEER

DATE	3/2000
SCALE	As Noted
DESIGNED BY	R.F.
DRAWN BY	R.D., K.W.
CHECKED BY	R.R.
APPROVED BY	
UTILITIES DEPARTMENT	

PRECAST CONCRETE SLAB LAYOUT

SPECIFICATION NO. 9367

FILE NO./LOCATION 0060 B

SHEET 32 OF 41

DIST	COUNTY	ROUTE	POST MILES TOTAL PROJECT	SHEET NO.	TOTAL SHEETS
5	SLO		–	33	41

Ronald L. Rivett
REGISTERED CIVIL ENGINEER

4/5/00
PLANS APPROVAL DATE

REGISTERED PROFESSIONAL ENGINEER Ronald L. Rivett No. 31,269 EXP. 12/31/00 CIVIL STATE OF CALIFORNIA

MARTIN & KANE, Inc.
2200-B DOUGLAS BLVD, #150
ROSEVILLE • CA 95661

Notes:

1. Slab unit lengths are measured along the ℄ of unit.
2. End of units are square unless otherwise noted.
3. Units are placed along a typical bearing of N 34°14'42" W and spaced along ℄ San Luis Creek
4. Units are placed parallel to ℄ Higuera Street.
5. P_f and Number of #13 strands are values for each precast, prestressed concrete unit.
6. For Typical Section and other information see, "PRECAST CONCRETE SLAB DETAILS" sheet.

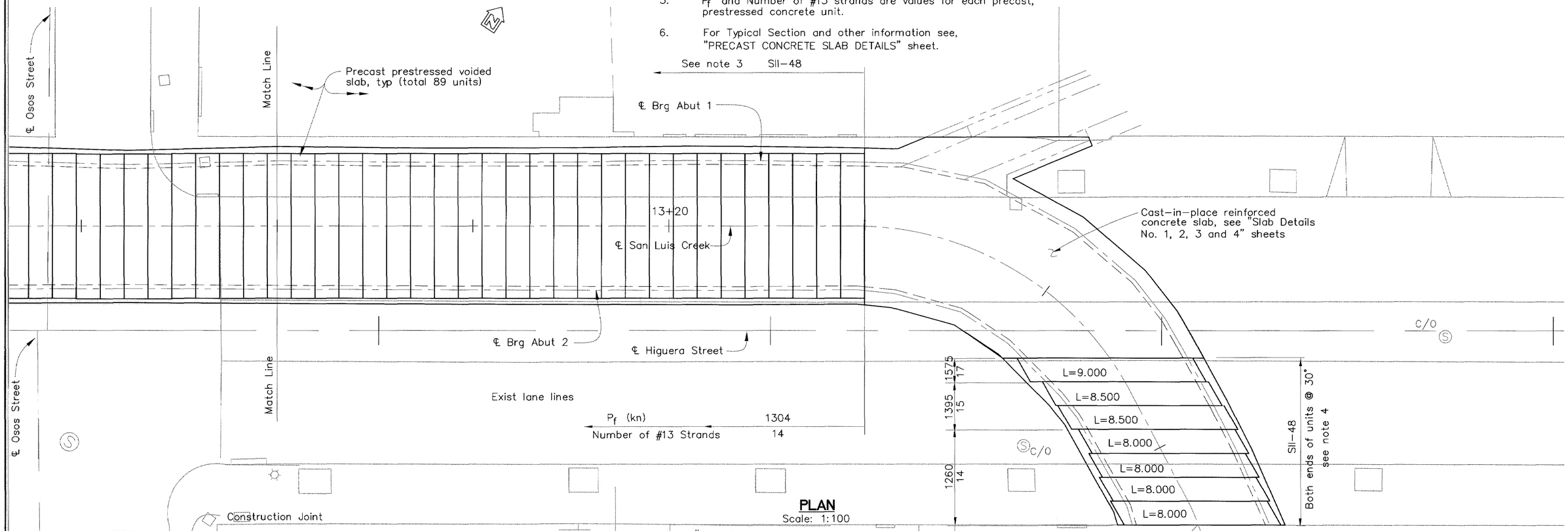

PLAN
Scale: 1:100

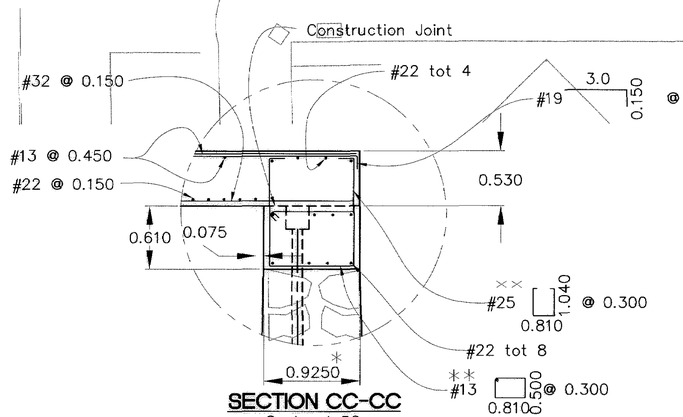

SECTION CC-CC
Scale: 1:50

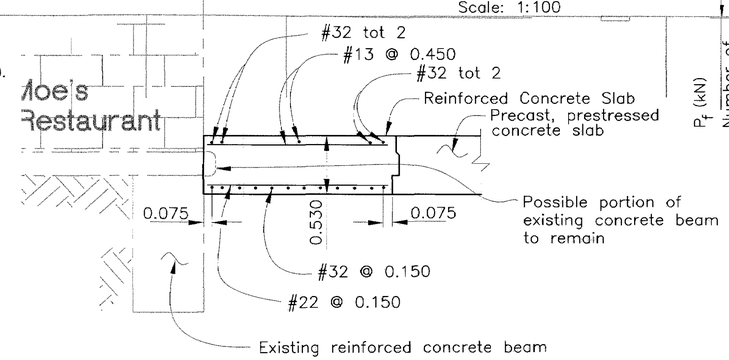

SECTION BB-BB
Scale: 1:50

The contractor shall verify all controlling field dimensions before ordering or fabricating any materials.

All dimensions are in meters unless otherwise noted

City of San Luis Obispo

HIGUERA STREET BRIDGE REPLACEMENT

FOR REDUCED PLANS ORIGINAL SCALE IS IN MILLIMETERS 0 20 40 60 80 100

APPROVED BY

CITY ENGINEER

DATE	3/2000
SCALE	As Noted
DESIGNED BY	R.F.
DRAWN BY	R.D., K.W.
CHECKED BY	R.R.
APPROVED BY	
UTILITIES DEPARTMENT	

PRECAST CONCRETE SLAB AND CAST-IN-PLACE CONCRETE SLAB LAYOUT

SPECIFICATION NO. 9367
FILE NO./LOCATION 0060 B
SHEET 33 OF 41

N:\MKSR\R1\PROJECTS\1997\97017.00 HIGUERA STREET BRIDGE REHAB\100% Submittal\97017-7-SLAB.dwg 3-17-00

DIST	COUNTY	ROUTE	POST MILES TOTAL PROJECT	SHEET NO.	TOTAL SHEETS
5	SLO		–	33	41

REGISTERED CIVIL ENGINEER

PLANS APPROVAL DATE

REGISTERED PROFESSIONAL ENGINEER
Ronald L. Rivets
No. 31,269
EXP. 12/31/00
CIVIL
STATE OF CALIFORNIA

MARTIN & KANE, Inc.
2200-B DOUGLAS BLVD. #150
ROSEVILLE • CA 95661

Metric

Notes:

1. Slab unit lengths are measured along the ? of unit.
2. End of units are square unless otherwise noted.
3. Units are placed along a typical bearing of N 34?14'42" W and spaced along ? San Luis Creek
4. Units are placed parallel to ? Higuera Street.
5. P_f and Number of #13 strands are values for each precast, prestressed concrete unit.
6. For Typical Section and other information see, "PRECAST CONCRETE SLAB DETAILS" sheet.

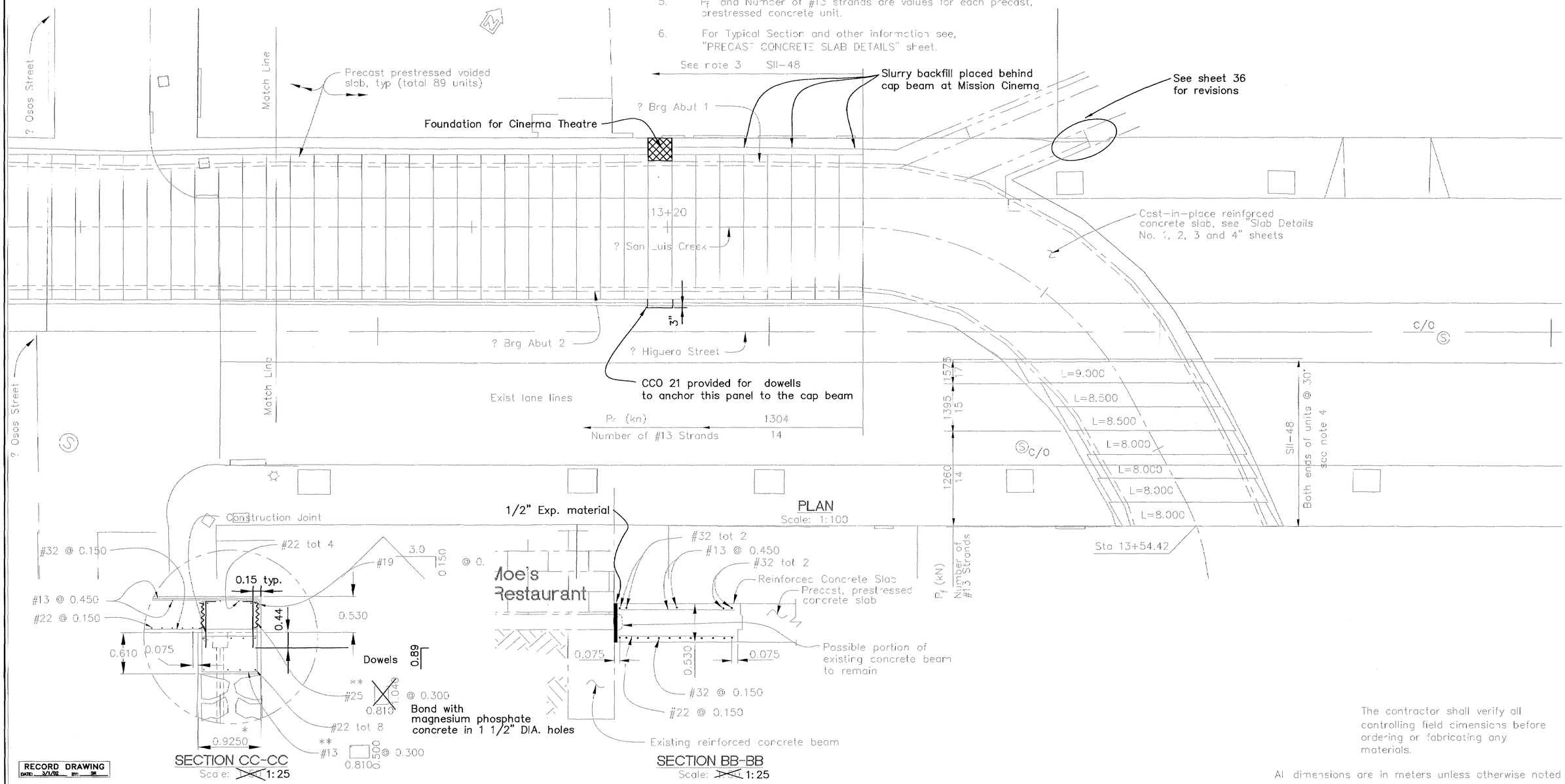

RECORD DRAWING
DATE: 3/1/02 BY: SR

The contractor shall verify all controlling field dimensions before ordering or fabricating any materials.

All dimensions are in meters unless otherwise noted

city of san luis obispo

HIGUERA STREET BRIDGE REPLACEMENT

FOR REDUCED PLANS ORIGINAL SCALE IS IN MILLIMETERS 0 20 40 60 80 100

APPROVED BY

CITY ENGINEER

DATE	3/2000
SCALE	As Noted
DESIGNED BY	R.F.
DRAWN BY	R.D., K.W.
CHECKED BY	R.R.
APPROVED BY	
UTILITIES DEPARTMENT	

PRECAST CONCRETE SLAB AND CAST-IN-PLACE CONCRETE SLAB LAYOUT

SPECIFICATION NO. 9367

FILE NO./LOCATION 0060 B

SHEET 33 R OF 41

N:\MKSRVR1\PROJECTS\1997\97017.00 HIGUERA STREET BRIDGE REHAB\100% Submittal\97017-7-SLAB.dwg 3-17-00

DIST	COUNTY	ROUTE	POST MILES TOTAL PROJECT	SHEET NO.	TOTAL SHEETS
5	SLO		–	34	41

Ronald L. Rivett
REGISTERED CIVIL ENGINEER

4/5/00
PLANS APPROVAL DATE

REGISTERED PROFESSIONAL ENGINEER
Ronald L. Rivett
No. 31,269
EXP. 12/31/00
CIVIL
STATE OF CALIFORNIA

MARTIN & KANE, Inc.
2200-B DOUGLAS BLVD, #150
ROSEVILLE • CA 95661

Note:

1. ⊗ denotes bundled bars
2. For additional info see "Slab Details No. 3 and 4 sheets
3. All #29 bundles not shown

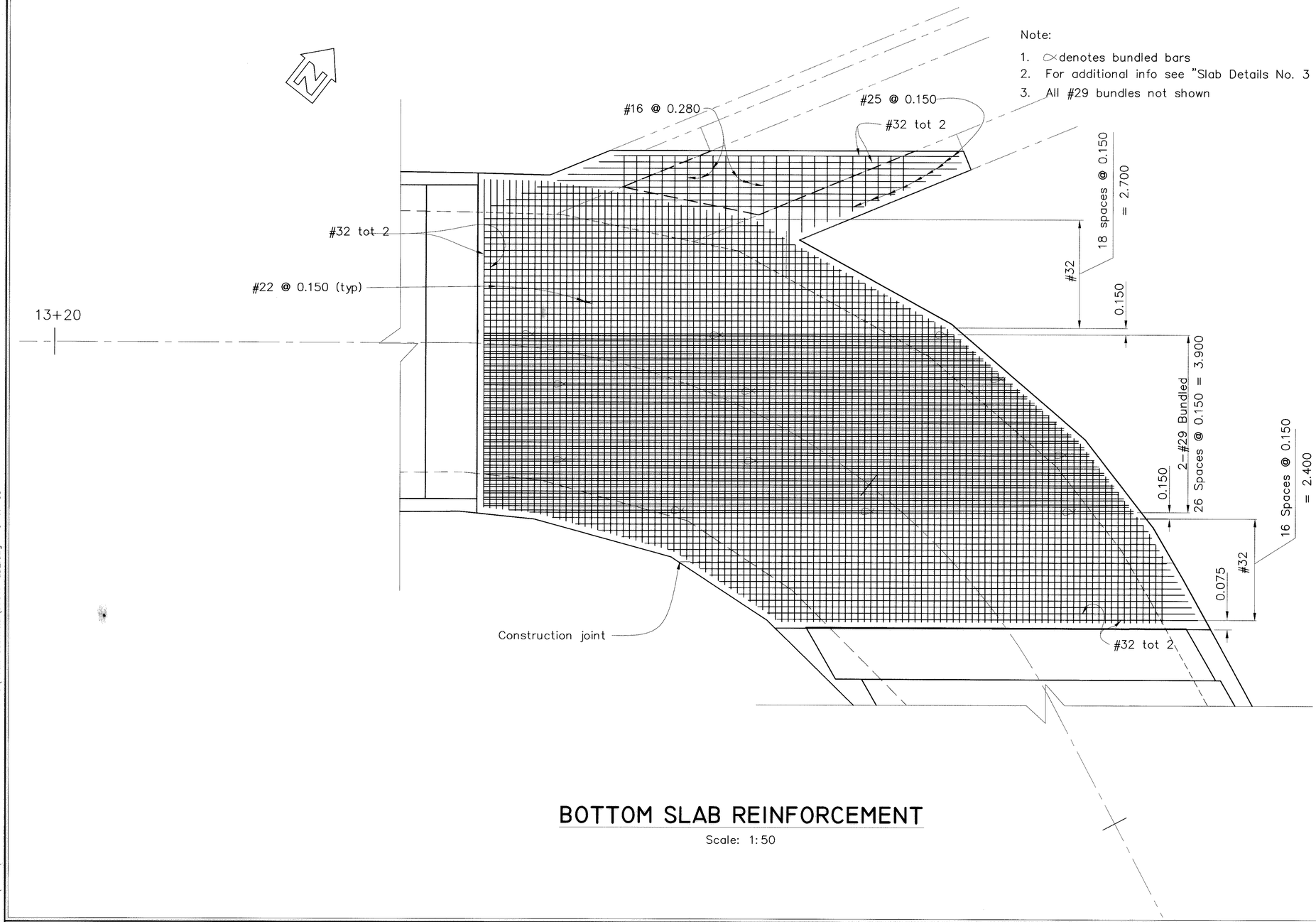

BOTTOM SLAB REINFORCEMENT

Scale: 1:50

The contractor shall verify all controlling field dimensions before ordering or fabricating any materials.

All dimensions are in meters unless otherwise noted

CITY OF SAN LUIS OBISPO

HIGUERA STREET BRIDGE REPLACEMENT

FOR REDUCED PLANS ORIGINAL SCALE IS IN MILLIMETERS 0 20 40 60 80 100

APPROVED BY

CITY ENGINEER

DATE	3/2000
SCALE	1:50
DESIGNED BY	R.F.
DRAWN BY	R.D., K.W.
CHECKED BY	R.R.
APPROVED BY	
UTILITIES DEPARTMENT	

SLAB DETAILS NO. 1

SPECIFICATION NO. 9367

FILE NO./LOCATION 0060 B

SHEET 34 OF 41

N:\MKSRVR1\MK PROJECTS\1997\97017.00 HIGUERA STREET BRIDGE REHAB\100% Submittal\97017-SD2.dwg 3-17-00

DIST	COUNTY	ROUTE	POST MILES TOTAL PROJECT	SHEET NO.	TOTAL SHEETS
5	SLO		–	34	41

REGISTERED CIVIL ENGINEER

PLANS APPROVAL DATE

REGISTERED PROFESSIONAL ENGINEER Ronald L. Rivett No. 31,269 EXP. 12/31/00 CIVIL STATE OF CALIFORNIA

MARTIN & KANE, Inc.
2200-B DOUGLAS BLVD. #150
ROSEVILLE • CA 95661

Note:

1. ⊗ denotes bundled bars
2. For additional info see "Slab Details No. 3 and 4 sheets
3. All #29 bundles not shown

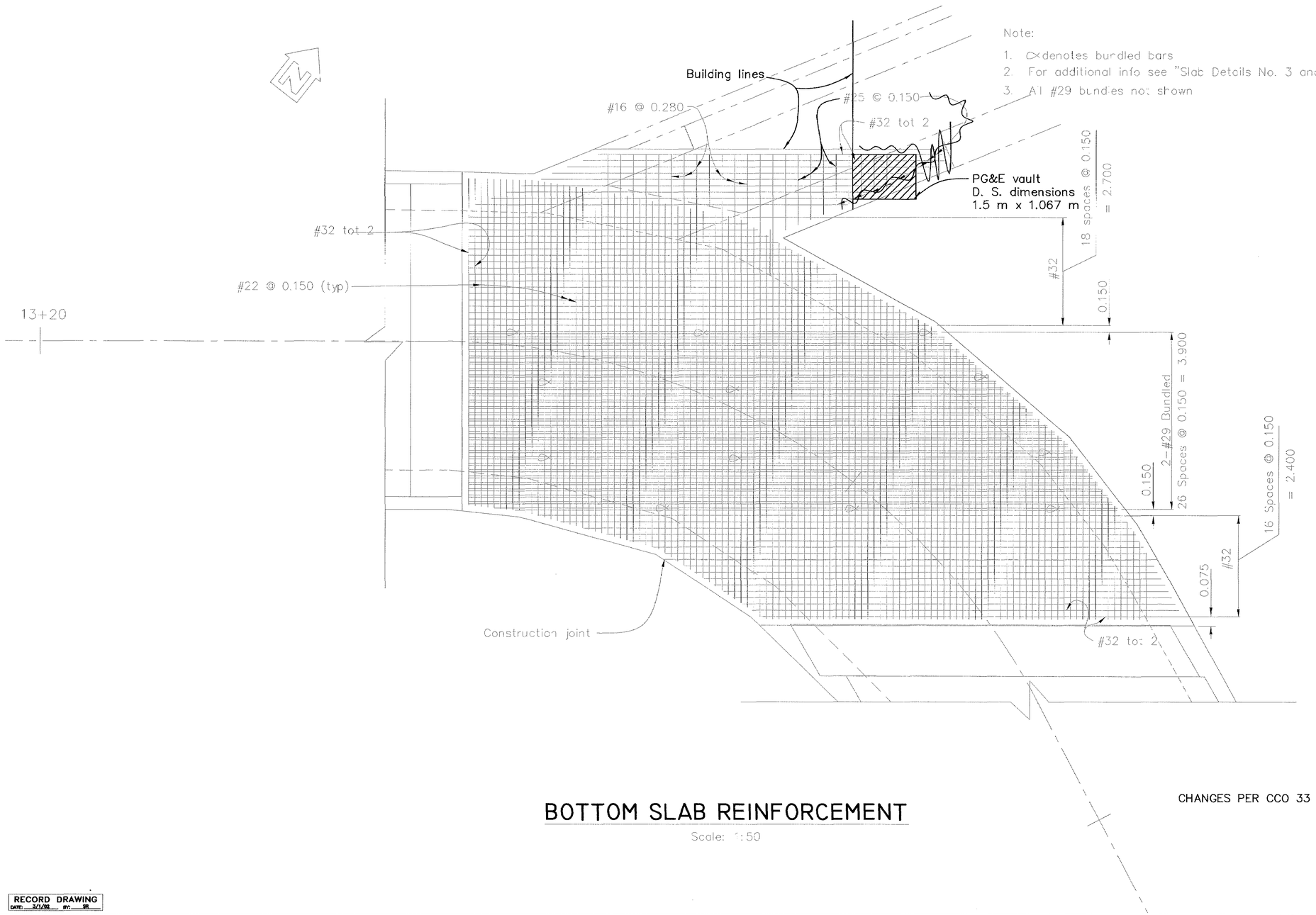

CHANGES PER CCO 33

BOTTOM SLAB REINFORCEMENT

Scale: 1:50

The contractor shall verify all controlling field dimensions before ordering or fabricating any materials.

All dimensions are in meters unless otherwise noted

RECORD DRAWING
DATE: 3/1/02 BY: SR

N:\MKSRVR1\MK PROJECTS\1997\97017.00 HIGUERA STREET BRIDGE REHAB\100% Submittal\97017-S02.dwg 3-17-00

city of san luis obispo

HIGUERA STREET BRIDGE REPLACEMENT

FOR REDUCED PLANS ORIGINAL SCALE IS IN MILLIMETERS 0 20 40 60 80 100

APPROVED BY

CITY ENGINEER

DATE	3/2000
SCALE	1:50
DESIGNED BY	R.F.
DRAWN BY	R.D., K.W.
CHECKED BY	R.R.
APPROVED BY	
UTILITIES DEPARTMENT	

SLAB DETAILS NO. 1

SPECIFICATION NO. 9367

FILE NO./LOCATION 0060 B

SHEET 34R OF 41

DIST	COUNTY	ROUTE	POST MILES TOTAL PROJECT	SHEET NO.	TOTAL SHEETS
5	SLO		–	35	41

Ronald L. Rivett
REGISTERED CIVIL ENGINEER

4/5/00
PLANS APPROVAL DATE

REGISTERED PROFESSIONAL ENGINEER
Ronald L. Rivett
No. 31,269
EXP. 12/31/00
CIVIL
STATE OF CALIFORNIA

MARTIN & KANE, Inc.
2200-B DOUGLAS BLVD, #150
ROSEVILLE • CA 95661

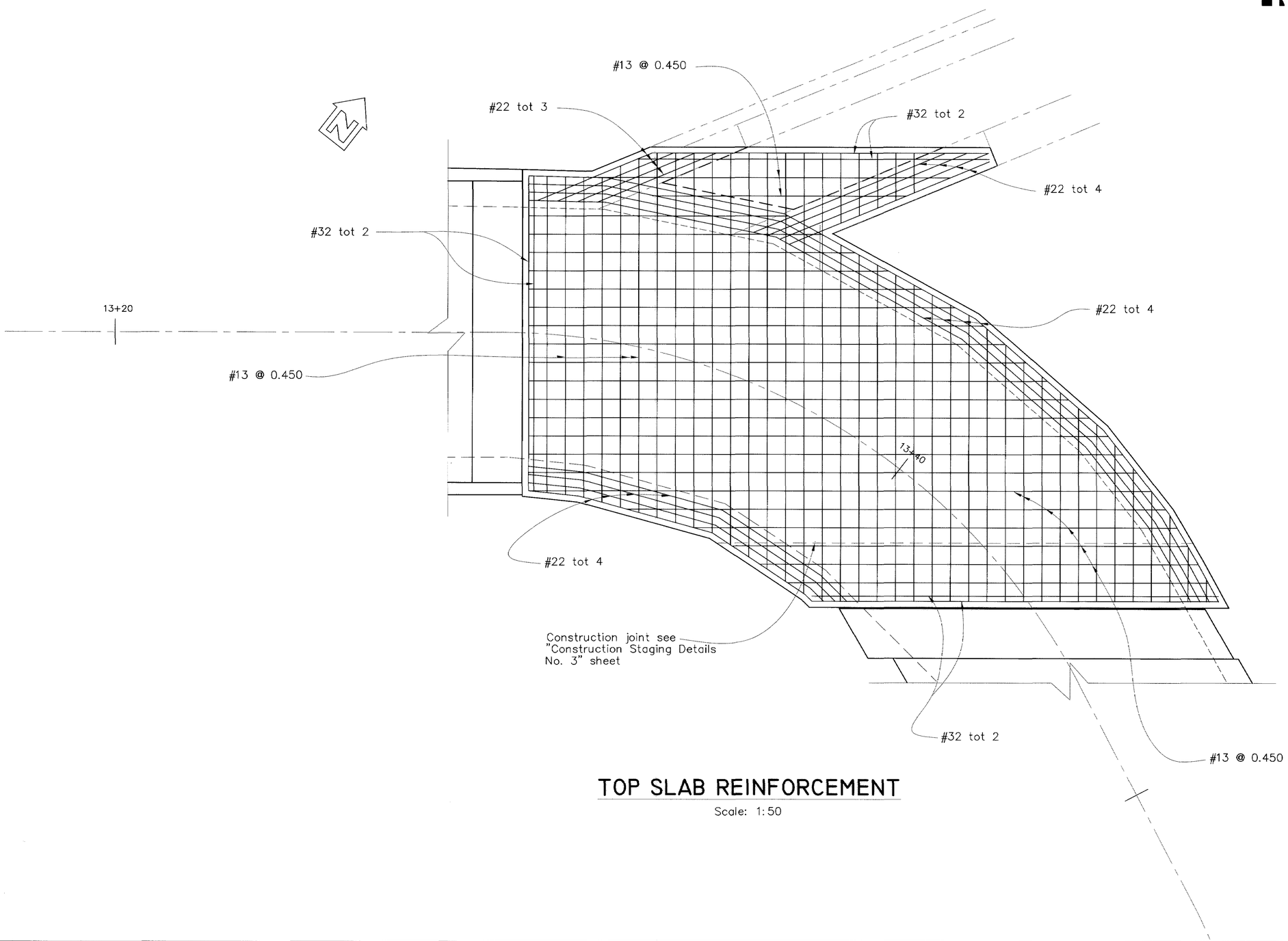

TOP SLAB REINFORCEMENT

Scale: 1:50

Note:
For additional info
see "Slab Details No.3 and 4" sheets

The contractor shall verify all controlling field dimensions before ordering or fabricating any materials.

All dimensions are in meters unless otherwise noted

N:\MKSRVR1\MK PROJECTS\1997\97017.00 HIGUERA STREET BRIDGE REHAB\100% Submittal\97017-S02.dwg 3-17-00

City of San Luis Obispo

HIGUERA STREET BRIDGE REPLACEMENT

FOR REDUCED PLANS ORIGINAL SCALE IS IN MILLIMETERS 0 20 40 60 80 100

APPROVED BY

CITY ENGINEER

DATE	3/2000
SCALE	1:50
DESIGNED BY	R.F.
DRAWN BY	R.D., K.W.
CHECKED BY	R.R.
APPROVED BY	
UTILITIES DEPARTMENT	

SLAB DETAILS NO. 2

SPECIFICATION NO. 9367

FILE NO./LOCATION 0060 B

SHEET 35 OF 41

DIST	COUNTY	ROUTE	POST MILES TOTAL PROJECT	SHEET NO.	TOTAL SHEETS
5	SLO		–	35	41

REGISTERED CIVIL ENGINEER

PLANS APPROVAL DATE

REGISTERED PROFESSIONAL ENGINEER Ronald L. Rivett No. 33269 EXP. 12/31/00 CIVIL STATE OF CALIFORNIA

MARTIN & KANE, Inc.
2200-B DOUGLAS BLVD. #150
ROSEVILLE • CA 95661

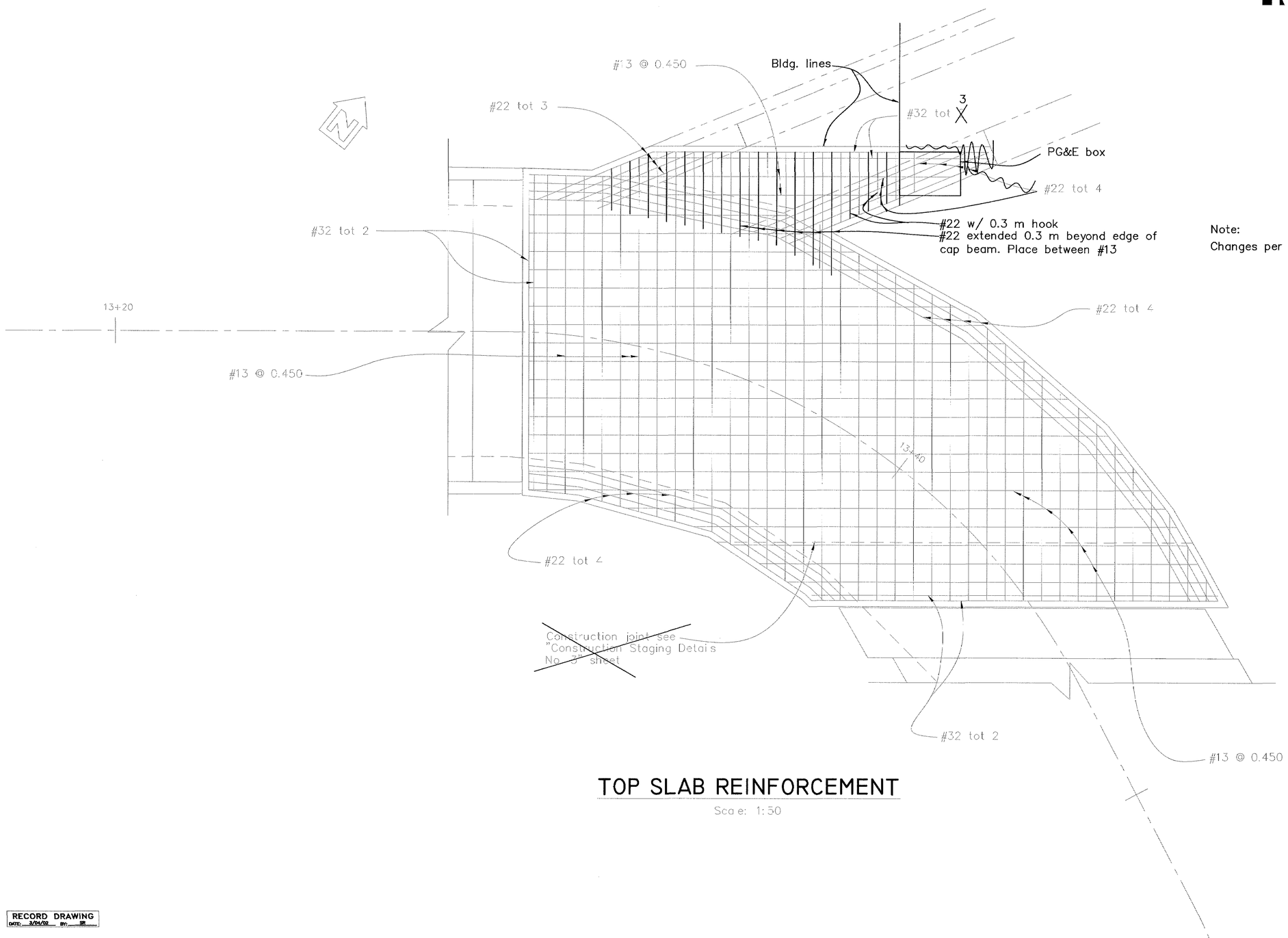

Note:
Changes per CCO 33

Note:
For additional info see "Slab Details No.3 and 4" sheets

TOP SLAB REINFORCEMENT

Scale: 1:30

The contractor shall verify all controlling field dimensions before ordering or fabricating any materials.

All dimensions are in meters unless otherwise noted

RECORD DRAWING
DATE: 3/24/02 BY: SR

N:\MKSRVR1\MK PROJECTS\1997\97017.00 HIGUERA STREET BRIDGE REHAB\100% Submittal\97017-SD2.dwg 3-17-00

city of san luis obispo

HIGUERA STREET BRIDGE REPLACEMENT

FOR REDUCED PLANS ORIGINAL SCALE IS IN MILLIMETERS 0 20 40 60 80 100

APPROVED BY

CITY ENGINEER

DATE	3/2000
SCALE	1:50
DESIGNED BY	R.F.
DRAWN BY	R.D., K.W.
CHECKED BY	R.R.
APPROVED BY	
UTILITIES DEPARTMENT	

SLAB DETAILS NO. 2

SPECIFICATION NO. 9367

FILE NO./LOCATION 0060 B

SHEET 35R OF 41

DIST	COUNTY	ROUTE	POST MILES TOTAL PROJECT	SHEET NO.	TOTAL SHEETS
5	SLO		–	36	41

Ronald L. Rivett
REGISTERED CIVIL ENGINEER

4/5/00
PLANS APPROVAL DATE

REGISTERED PROFESSIONAL ENGINEER Ronald L. Rivett No. 31,269 EXP. 12/31/00 CIVIL STATE OF CALIFORNIA

MARTIN & KANE, Inc.
2200-B DOUGLAS BLVD. #150
ROSEVILLE • CA 95661

Note: For sections O–O and P–P
see "Slab Details No. 4" sheet

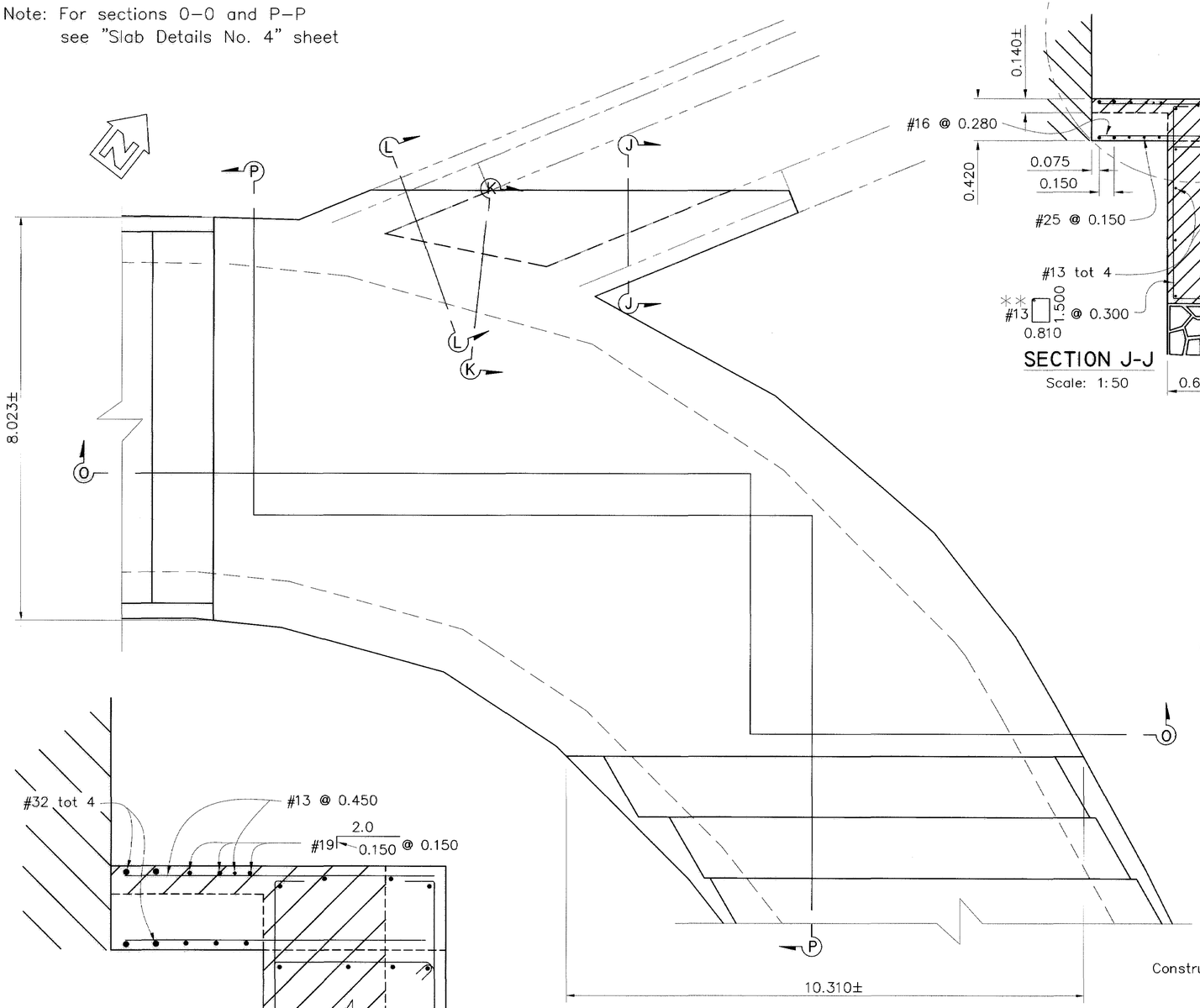

PLAN VIEW
Scale: 1:50

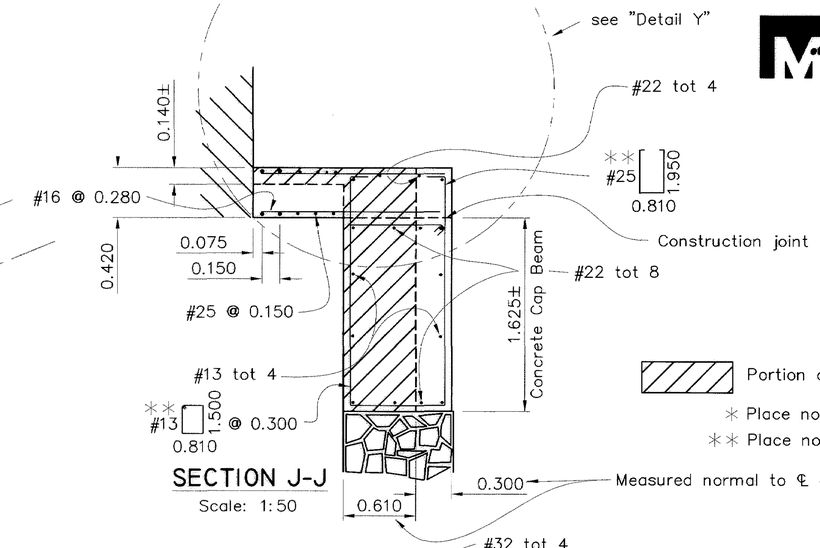

SECTION J-J
Scale: 1:50

Portion of existing bridge to be removed.
* Place normal to ℄ Higuera Street.
** Place normal to ℄ Concrete Cap Beam.

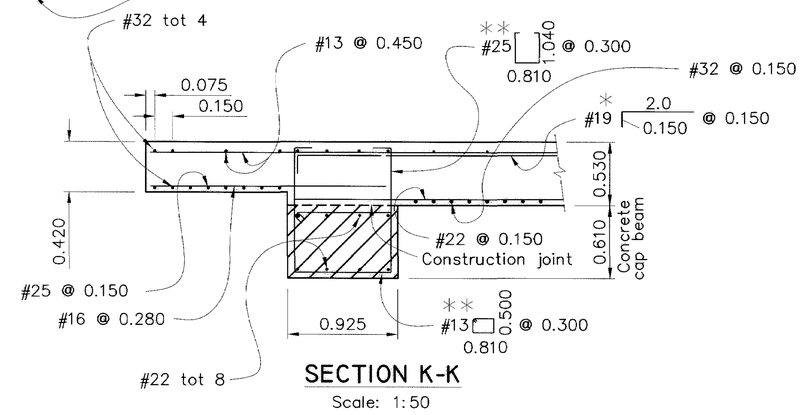

SECTION K-K
Scale: 1:50

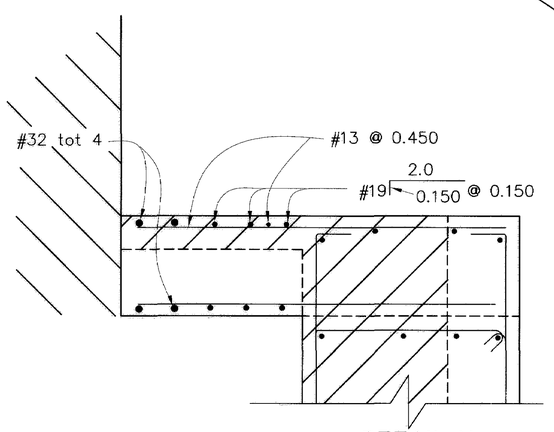

DETAIL Y
Scale: 1:50

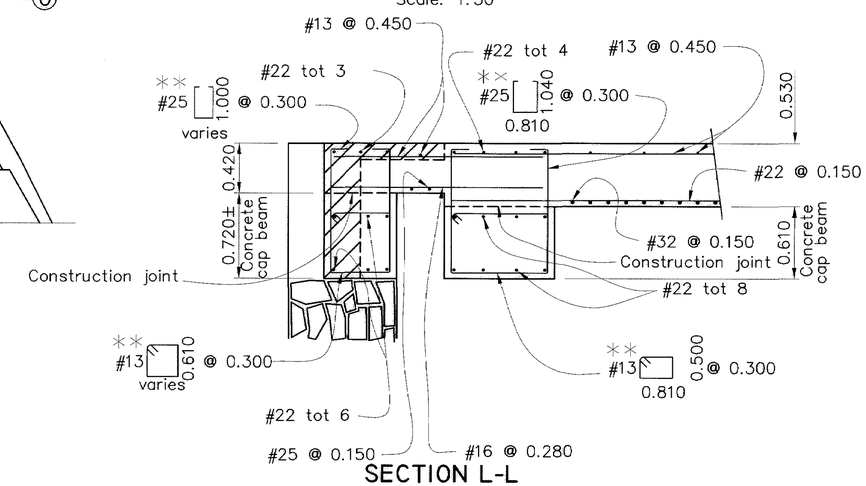

SECTION L-L
Scale: 1:50

The contractor shall verify all controlling field dimensions before ordering or fabricating any materials.

All dimensions are in meters unless otherwise noted

City of San Luis Obispo

HIGUERA STREET BRIDGE REPLACEMENT

FOR REDUCED PLANS ORIGINAL SCALE IS IN MILLIMETERS 0 20 40 60 80 100

APPROVED BY
CITY ENGINEER

DATE	3/2000
SCALE	As Noted
DESIGNED BY	R.F.
DRAWN BY	R.D., K.W.
CHECKED BY	R.R.
APPROVED BY	
UTILITIES DEPARTMENT	

SLAB DETAILS NO. 3

SPECIFICATION NO. 9367
FILE NO./LOCATION 0060 B
SHEET 36 OF 41

N:\MKSRVR1\MK PROJECTS\1997\97017.00 HIGUERA STREET BRIDGE REHAB\100% Submittal\97017-SD2.dwg 3-17-00

DIST	COUNTY	ROUTE	POST MILES TOTAL PROJECT	SHEET NO.	TOTAL SHEETS
5	SLO		–	36	41

REGISTERED CIVIL ENGINEER

PLANS APPROVAL DATE

REGISTERED PROFESSIONAL ENGINEER Ronald L. Rivett No. 31,269 EXP. 12/31/00 CIVIL STATE OF CALIFORNIA

MARTIN & KANE, Inc.
2200-B DOUGLAS BLVD, #150
ROSEVILLE • CA 95661

Metric

Note: For sections O–O and P–P see "Slab Details No. 4" sheet

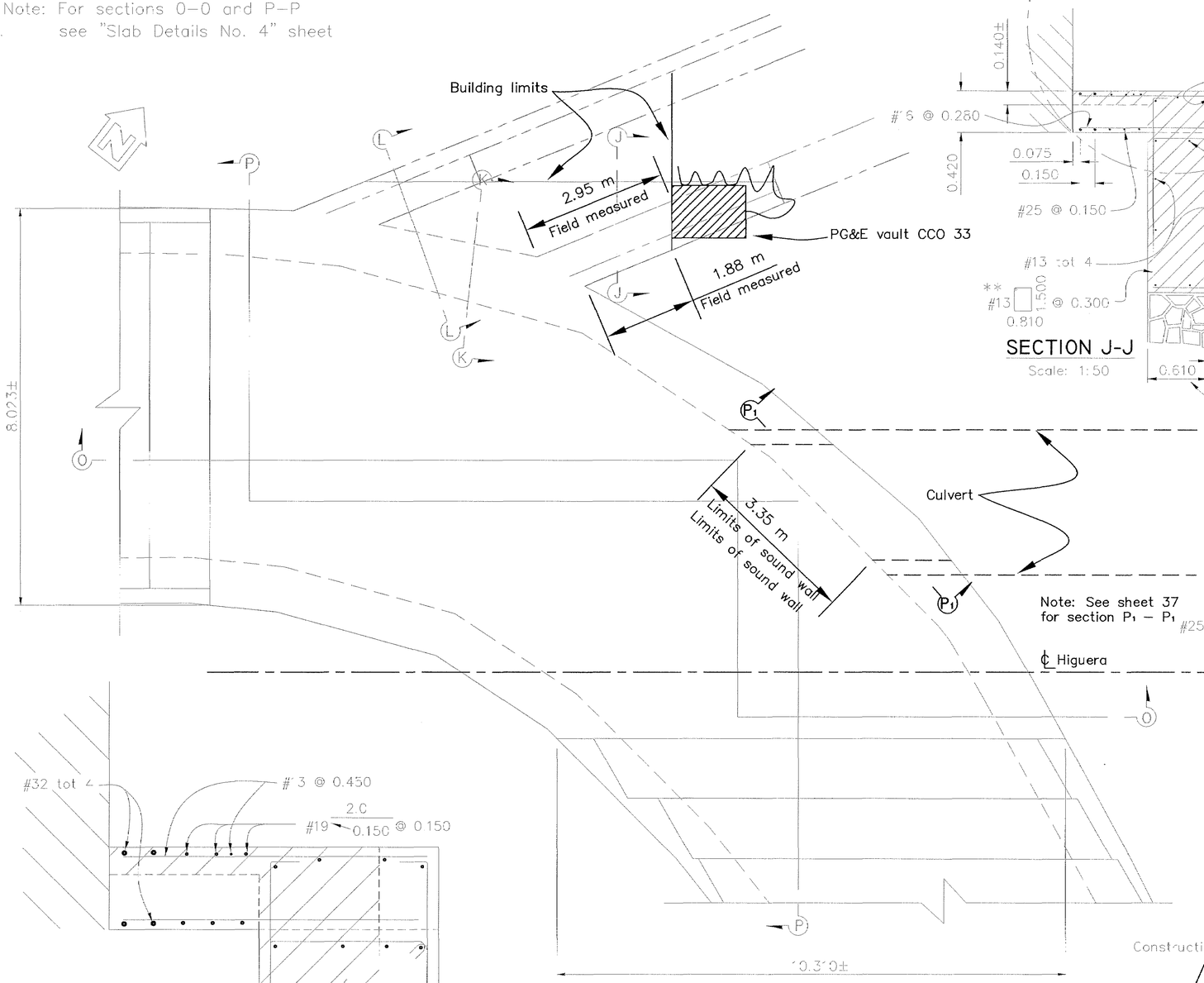

PLAN VIEW
Scale: 1:50

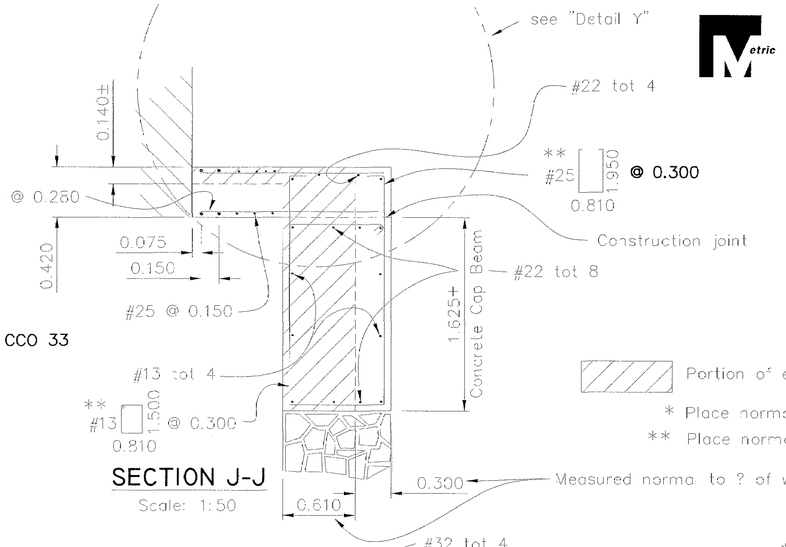

SECTION J-J
Scale: 1:50

Portion of existing bridge to be removed.
* Place normal to ? Higuera Street.
** Place normal to ? Concrete Cap Beam.

Stirrup legs shortened to obtain 2" clearance for deck steel.

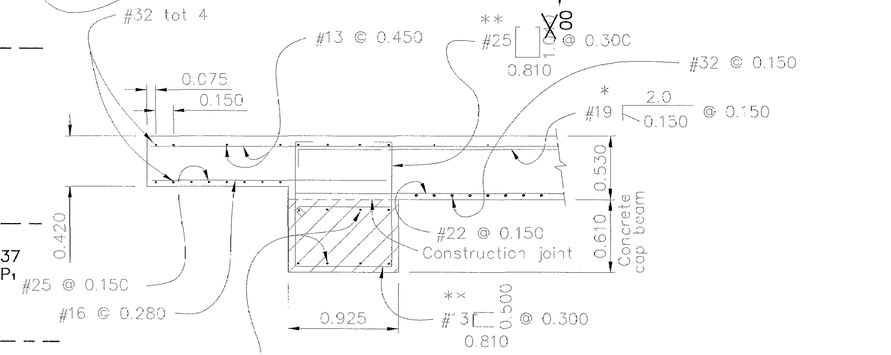

SECTION K-K
Scale: 1:50

DETAIL Y
Scale: 1:50

CCO 29 revised leg dimensions of stirrups (#25)

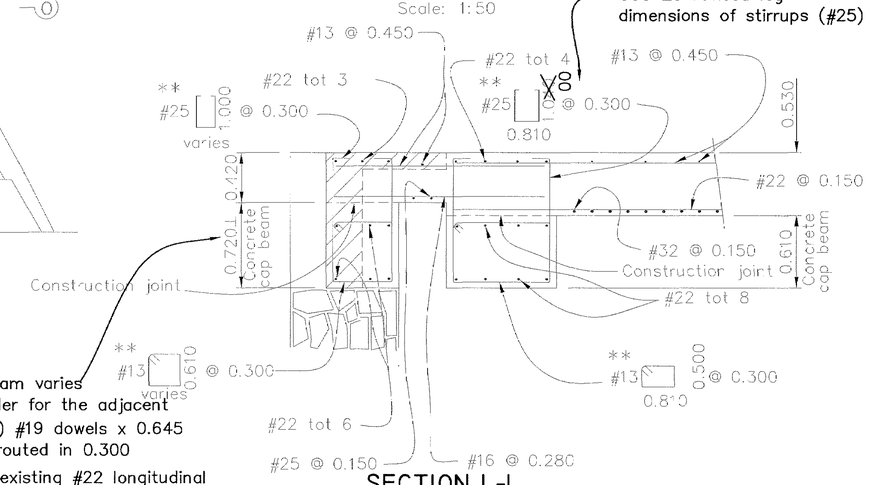

SECTION L-L
Scale: 1:50

The contractor shall verify all controlling field dimensions before ordering or fabricating any materials.

By CCO 32, the depth of cap beam varies 1 m± adjacent to a support girder for the adjacent bldg. was cast w/the deck. (4) #19 dowels x 0.645 long at 0.300 m spacing were grouted in 0.300 deep holes by 32 mm DIA.. The existing #22 longitudinal bars were extended to the bldg. foundation by lap splicing.

All dimensions are in meters unless otherwise noted

RECORD DRAWING DATE: 3/04/02 BY: SR

city of san luis obispo

HIGUERA STREET BRIDGE REPLACEMENT

FOR REDUCED PLANS ORIGINAL SCALE IS IN MILLIMETERS 0 20 40 60 80 100

APPROVED BY

CITY ENGINEER

DATE	3/2000
SCALE	As Noted
DESIGNED BY	R.F.
DRAWN BY	R.D., K.W.
CHECKED BY	R.R.
APPROVED BY	
UTILITIES DEPARTMENT	

SLAB DETAILS NO. 3

SPECIFICATION NO. 9367

FILE NO./LOCATION 0060 B

SHEET 36R OF 41

N:\MKSRVR1\MK PROJECTS\1997\97017.00 HIGUERA STREET BRIDGE RC\AB\100% Submittal\97017-S02.dwg 3-17-00

DIST	COUNTY	ROUTE	POST MILES TOTAL PROJECT	SHEET NO.	TOTAL SHEETS
5	SLO		–	37	41

Ronald L. Rivett
REGISTERED CIVIL ENGINEER

4/5/00
PLANS APPROVAL DATE

REGISTERED PROFESSIONAL ENGINEER Ronald L. Rivett No. 31,269 Exp. 12/31/00 CIVIL STATE OF CALIFORNIA

MARTIN & KANE, Inc.
2200-B DOUGLAS BLVD. #150
ROSEVILLE • CA 95661

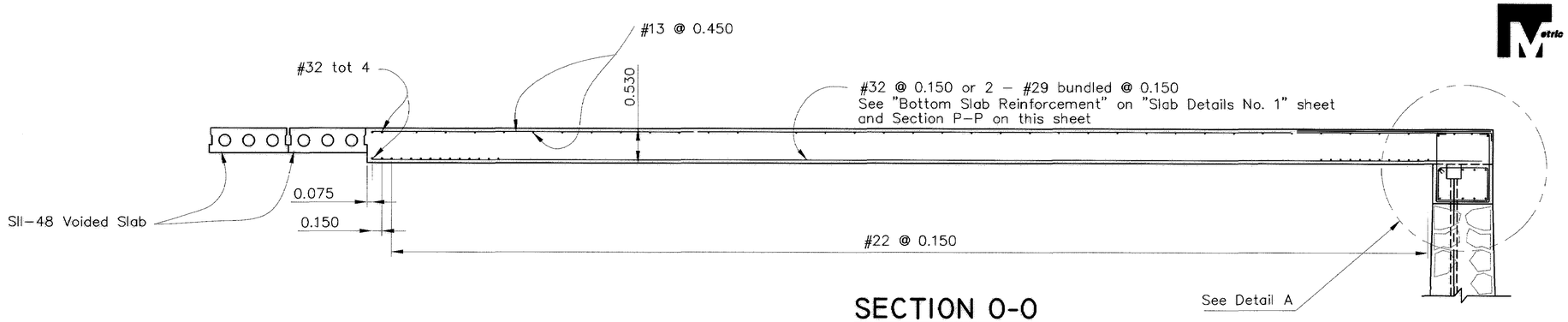

SECTION O-O
Scale: 1:200

Note: For locations of sections O-O and P-P see "Slab Details No. 3" sheet

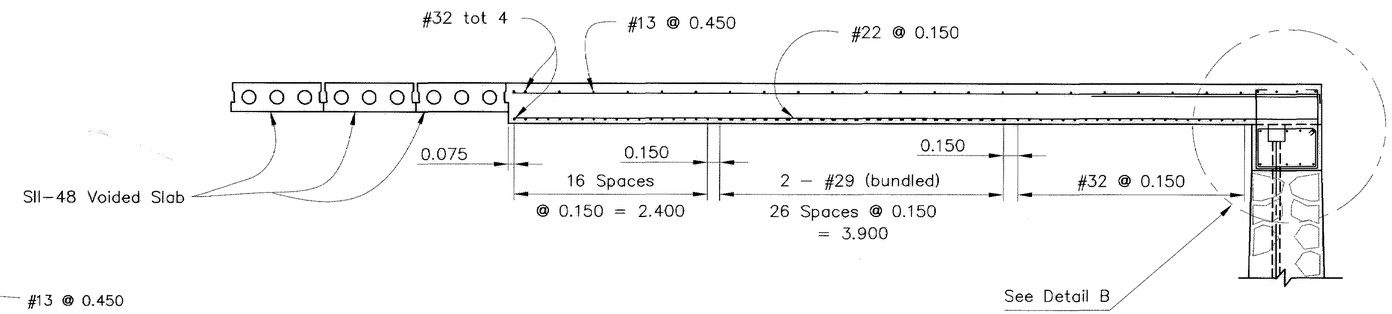

SECTION P-P
Scale: 1:200

The contractor shall verify all controlling field dimensions before ordering or fabricating any materials.

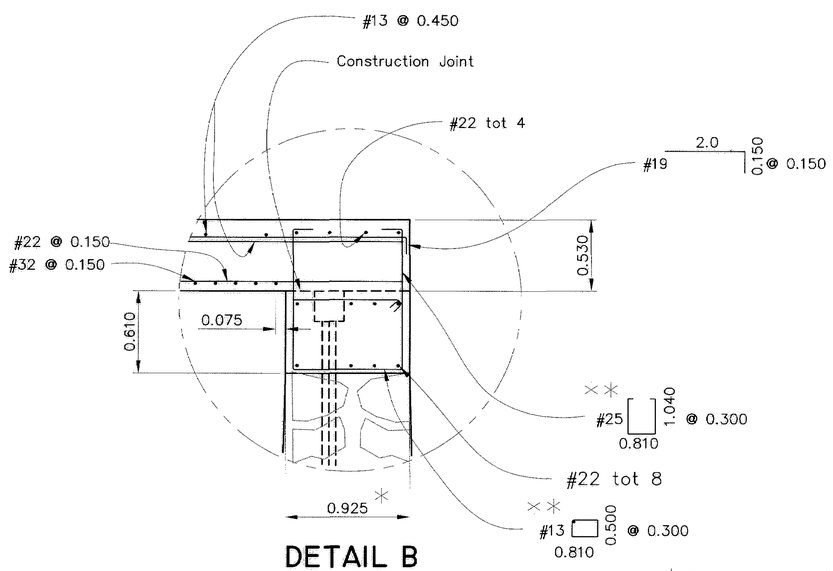

DETAIL B
Scale: 1:100

✳ Place normal to ℄ Higuera Street.
✳✳ Place normal to ℄ Concrete Cap Beam.

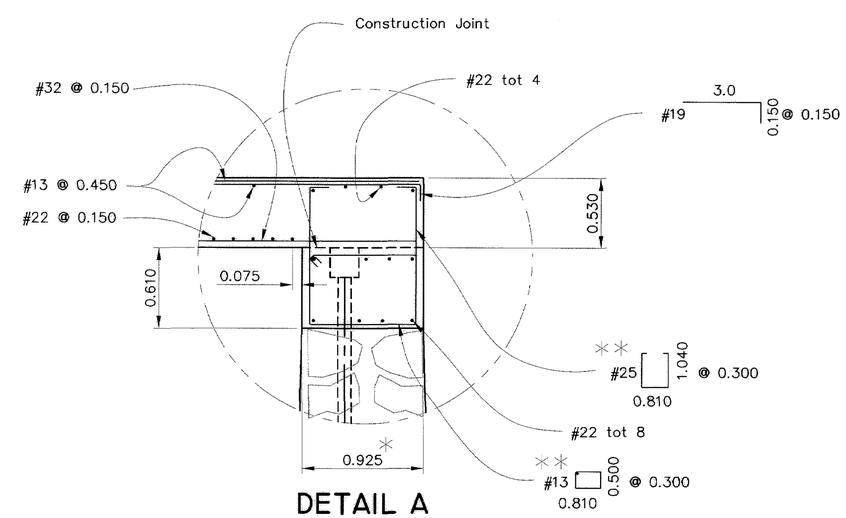

DETAIL A
Scale: 1:100

All dimensions are in meters unless otherwise noted

N:\MKSRVR1\MK PROJECTS\1997\97017.00 HIGUERA STREET BRIDGE REHAB\100% Submittal\97017-S02.dwg 3-17-00

City of San Luis Obispo

HIGUERA STREET BRIDGE REPLACEMENT

FOR REDUCED PLANS ORIGINAL SCALE IS IN MILLIMETERS 0 20 40 60 80 100

APPROVED BY
CITY ENGINEER

DATE	3/2000
SCALE	As Noted
DESIGNED BY	R.F.
DRAWN BY	R.D., K.W.
CHECKED BY	R.R.
APPROVED BY UTILITIES DEPARTMENT	

SLAB DETAILS NO. 4

SPECIFICATION NO. 9367
FILE NO./LOCATION 0060 B
SHEET 37 OF 41

DIST	COUNTY	ROUTE	POST MILES TOTAL PROJECT	SHEET NO.	TOTAL SHEETS
5	S_O		–	37	41

REGISTERED CIVIL ENGINEER

PLANS APPROVAL DATE

REGISTERED PROFESSIONAL ENGINEER Ronald L. Rivett No. 31,269 EXP 12/31/00 CIVIL STATE OF CALIFORNIA

MARTIN & KANE, Inc.
2200-B DOUGLAS BLVD. #150
ROSEVILLE • CA 95661

Metric

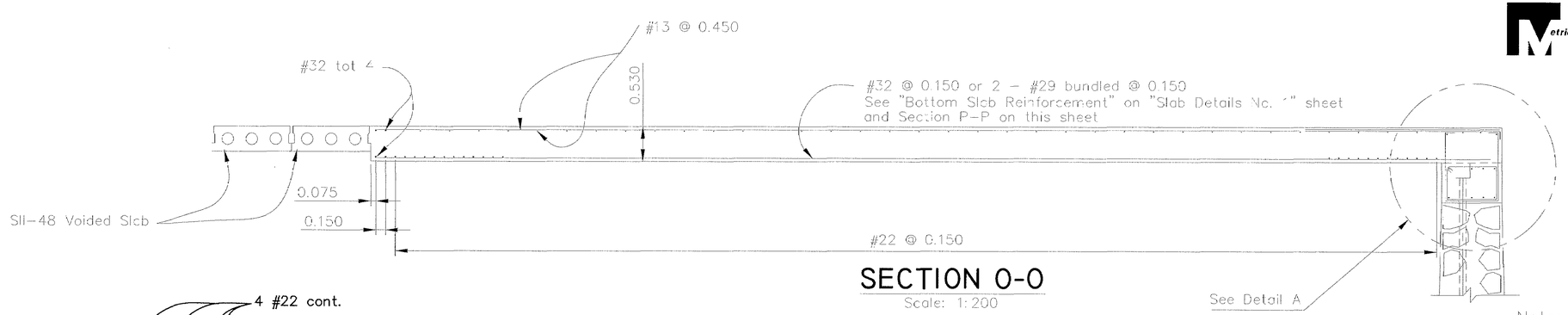

SECTION O-O

Scale: 1:200

Note: For locations of sections O-O and P-P see "Slab Details No. 3" sheet

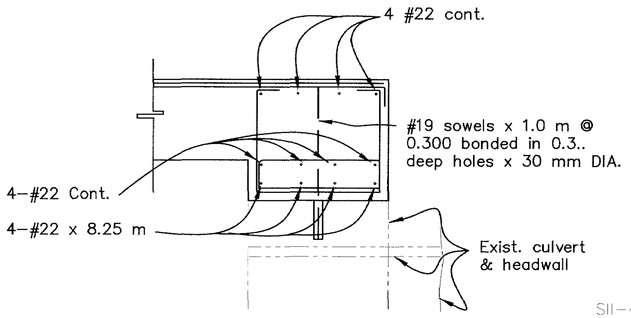

SECTION K1 - K1

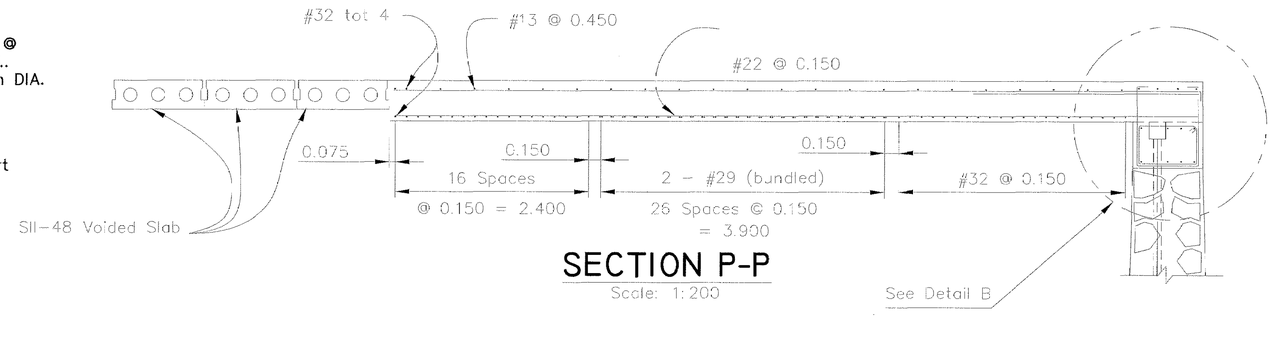

SECTION P-P

Scale: 1:200

The contractor shall verify all controlling field dimensions before ordering or fabricating any materials.

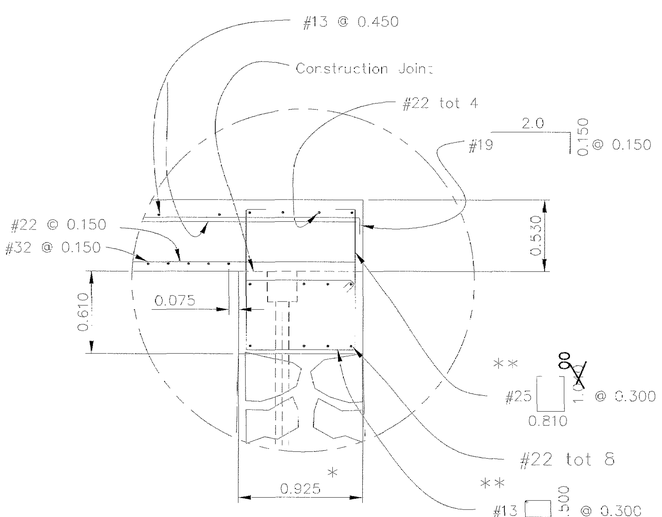

DETAIL B

Scale: 1:100

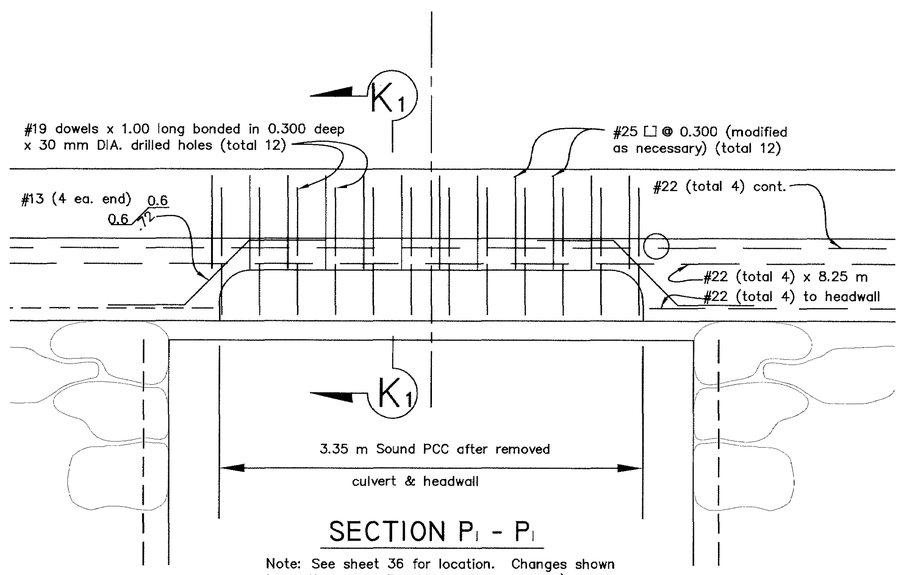

SECTION P1 - P1

Note: See sheet 36 for location. Changes shown in sections P1 – P1 & K1 – K1 are per CC) 33

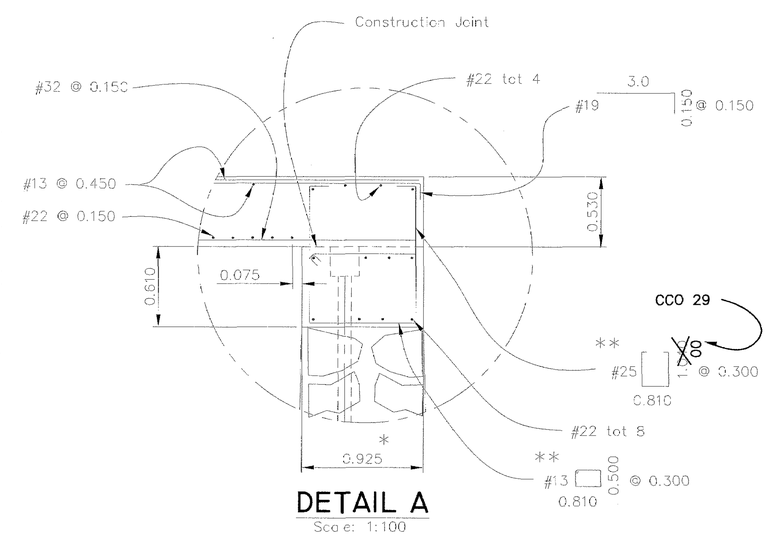

DETAIL A

Scale: 1:100

* Place normal to ? Higuera Street.

** Place normal to ? Concrete Cap Beam.

RECORD DRAWING
DATE: 3/04/02 BY: SR

All dimensions are in meters unless otherwise noted

city of san luis obispo

HIGUERA STREET BRIDGE REPLACEMENT

FOR REDUCED PLANS ORIGINAL SCALE IS IN MILLIMETERS 0 20 40 60 80 100

APPROVED BY

CITY ENGINEER

DATE	3/2000
SCALE	As Noted
DESIGNED BY	R.F.
DRAWN BY	R.D., K.W.
CHECKED BY	R.R.
APPROVED BY	
UTILITIES DEPARTMENT	

SLAB DETAILS NO. 4

SPECIFICATION NO. 9367

FILE NO./LOCATION 0060 B

SHEET 37R OF 41

DIST	COUNTY	ROUTE	POST MILES TOTAL PROJECT	SHEET NO.	TOTAL SHEETS
5	SLO		–	38	41

REGISTERED CIVIL ENGINEER

4/5/00
PLANS APPROVAL DATE

REGISTERED PROFESSIONAL ENGINEER Ronald L. Rivett No. 31,269 EXP. 12/31/00 CIVIL STATE OF CALIFORNIA

MARTIN & KANE, Inc.
2200-B DOUGLAS BLVD, #150
ROSEVILLE • CA 95661

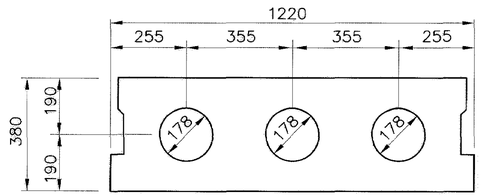

SII-48
1:10

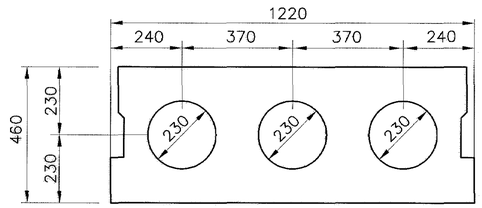

SIII-48
1:10

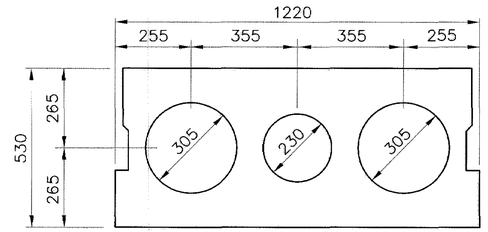

SIV-48
1:10

TYPICAL SECTION
1:10

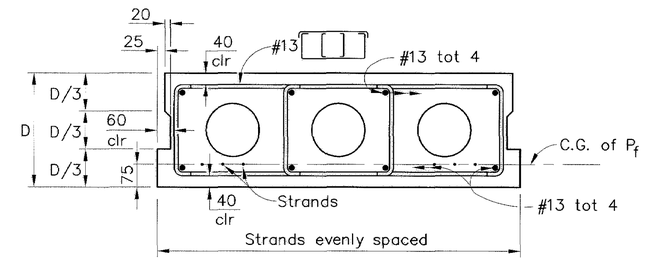

TYPICAL REINFORCEMENT
1:10

Prestressing General Notes:

1. P_f is the force required at center of span after all losses. for P_f and the number of strands per unit see "Precast Concrete Slab Layout" and "Precast Concrete Slab and Cast-in-Place Concrete Slab Layout" sheets.
2. Slabs designed for pretensioning.
3. Concrete strength at time of stressing 28 MPa, f'_c = 28 MPa at 28 days.
4. Live loading = HS 20-44, Alternative and permit Design load.
5. Design load varies for surfacing.
6. Keyways to be filled with mortar.

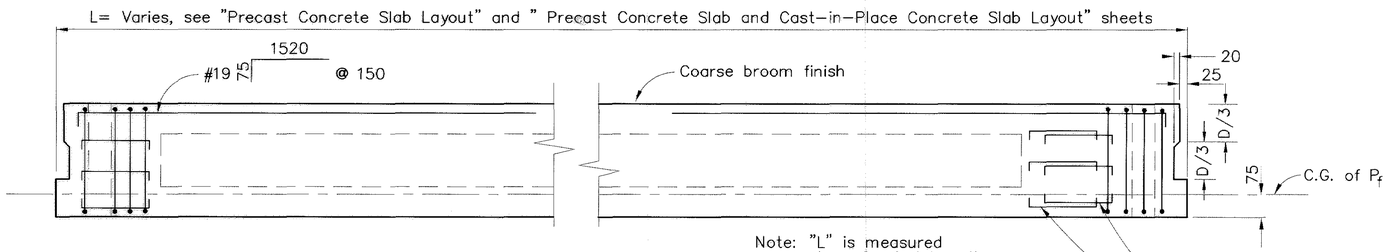

Note: "L" is measured along ℄ of slab unit

ELEVATION
1:10

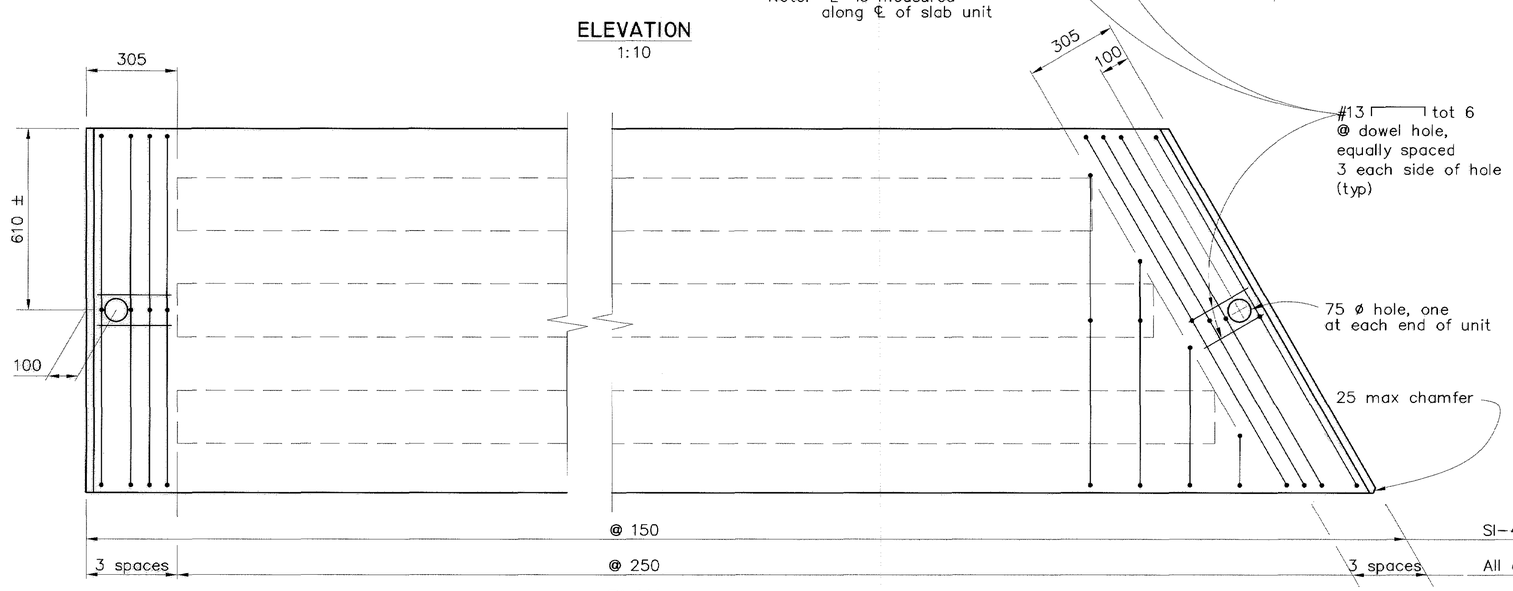

PLAN
1:10

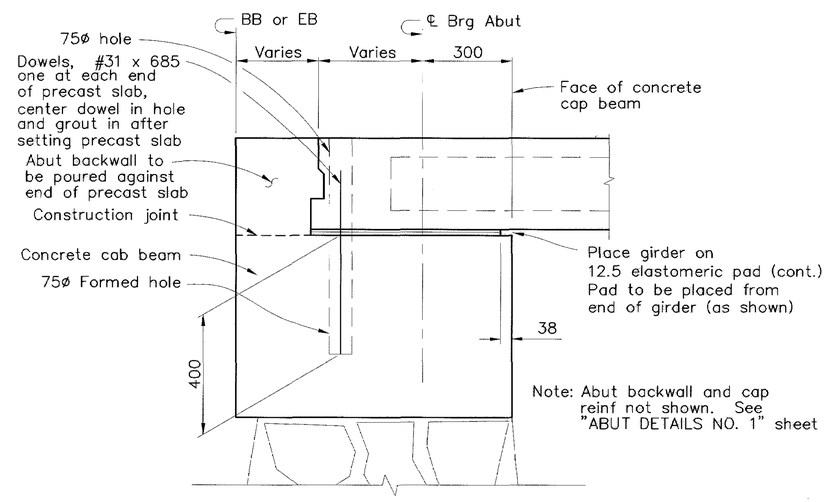

SUPPORT DETAIL AT ABUTMENT
1:10

The contractor shall verify all controlling field dimensions before ordering or fabricating any materials.

All dimensions are in millimeters unless otherwise noted.

N:\MKSRVR1\MK PROJECTS\1997\97017.00 HIGUERA STREET BRIDGE REHAB\100% Submittal\97017-S0.dwg 3/17/00

CITY OF SAN LUIS OBISPO

HIGUERA STREET BRIDGE REPLACEMENT

FOR REDUCED PLANS ORIGINAL SCALE IS IN MILLIMETERS 0 20 40 60 80 100

APPROVED BY

CITY ENGINEER

DATE	3/2000
SCALE	As Noted
DESIGNED BY	R.F.
DRAWN BY	R.D., K.W.
CHECKED BY	R.R.
APPROVED BY	
UTILITIES DEPARTMENT	

PRECAST CONCRETE SLAB DETAILS

SPECIFICATION NO. 9367

FILE NO./LOCATION 0060 B

SHEET 38 OF 41

DIST	COUNTY	ROUTE	POST MILES TOTAL PROJECT	SHEET NO.	TOTAL SHEETS
5	SLO		–	38	41

REGISTERED CIVIL ENGINEER

PLANS APPROVAL DATE

REGISTERED PROFESSIONAL ENGINEER Ronald L. Rivett No. 31,269 EXP. 12/31/00 Civil STATE OF CALIFORNIA

MARTIN & KANE, Inc.
2200-B DOUGLAS BLVD. #150
ROSEVILLE • CA 95661

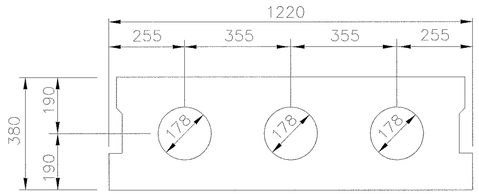

SII-48
1:10

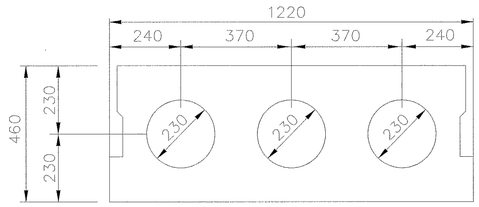

SIII-48
1:10

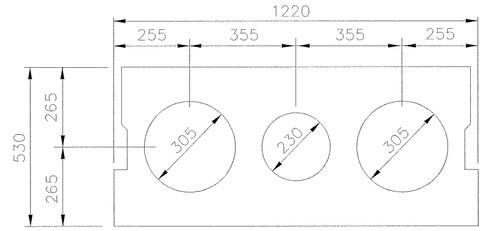

SIV-48
1:10

TYPICAL SECTION
1:10

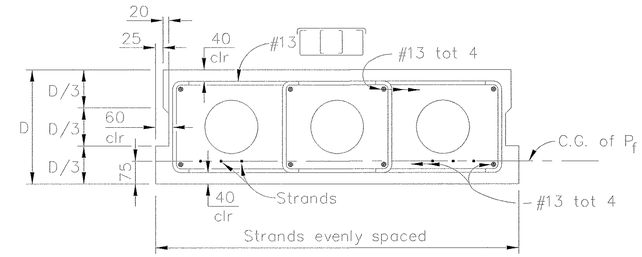

TYPICAL REINFORCEMENT
1:10

Prestressing General Notes:

1. P_f is the force required at center of span after all losses. for P_f and the number of strands per unit see "Precast Concrete Slab Layout" and "Precast Concrete Slab and Cast-in-Place Concrete Slab Layout" sheets.
2. Slabs designed for pretensioning.
3. Concrete strength at time of stressing 28 MPa, f'_c = 28 MPa at 28 days.
4. Live loading = HS 20-44, Alternative and permit Design load.
5. Design load varies for surfacing.
6. Keyways to be filled with mortar.

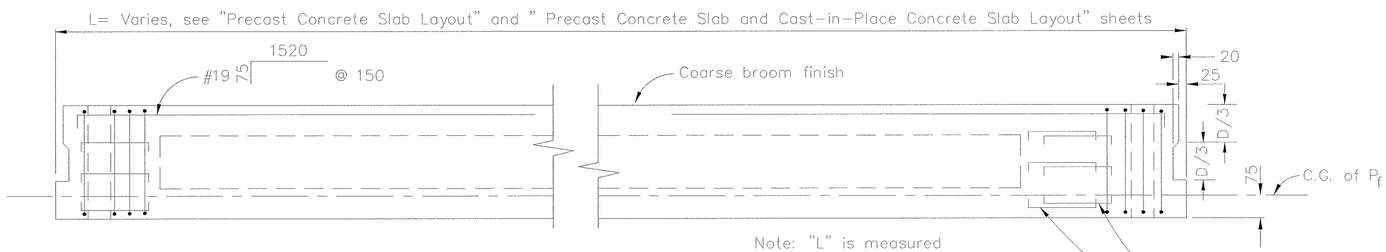

ELEVATION
1:10

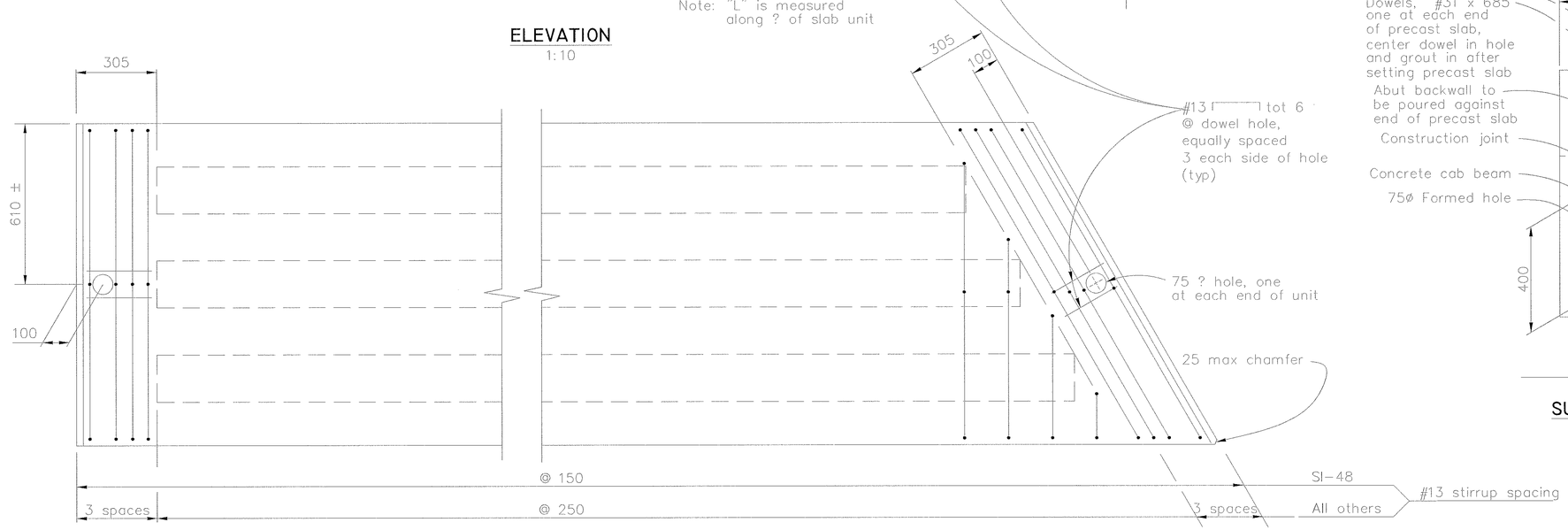

PLAN
1:10

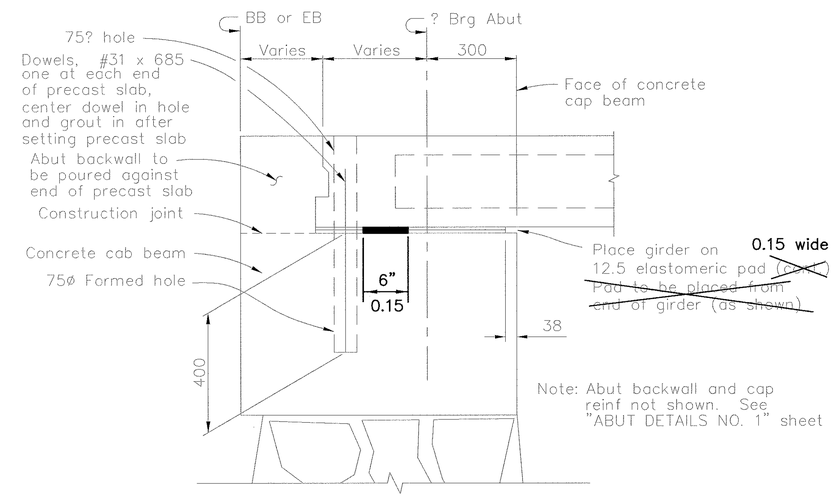

SUPPORT DETAIL AT ABUTMENT
1:10

The contractor shall verify all controlling field dimensions before ordering or fabricating any materials.

All dimensions are in millimeters unless otherwise noted.

RECORD DRAWING
DATE: 3/8/02 BY: SR

N:\MKSRVR1\MK PROJECTS\1997\97017.00 HIGUERA STREET BRIDGE REHAB\100% Submittal\97017-SD.dwg 3/17/00

city of san luis obispo

HIGUERA STREET BRIDGE REPLACEMENT

FOR REDUCED PLANS ORIGINAL SCALE IS IN MILLIMETERS 0 20 40 60 80 100

APPROVED BY

CITY ENGINEER

DATE	3/2000
SCALE	As Noted
DESIGNED BY	R.F.
DRAWN BY	R.D., K.W.
CHECKED BY	R.R.
APPROVED BY	
UTILITIES DEPARTMENT	

PRECAST CONCRETE SLAB DETAILS

SPECIFICATION NO. 9367

FILE NO./LOCATION 0060 B

SHEET 38R OF 41

DIST	COUNTY	ROUTE	POST MILES TOTAL PROJECT	SHEET NO.	TOTAL SHEETS
5	SLO		–	39	41

Ronald L. Rivett
REGISTERED CIVIL ENGINEER

4/5/00
PLANS APPROVAL DATE

REGISTERED PROFESSIONAL ENGINEER
Ronald L. Rivett
No. 31,269
EXP. 12/31/00
CIVIL
STATE OF CALIFORNIA

MARTIN & KANE, Inc.
2200-B DOUGLAS BLVD. #150
ROSEVILLE • CA 95661

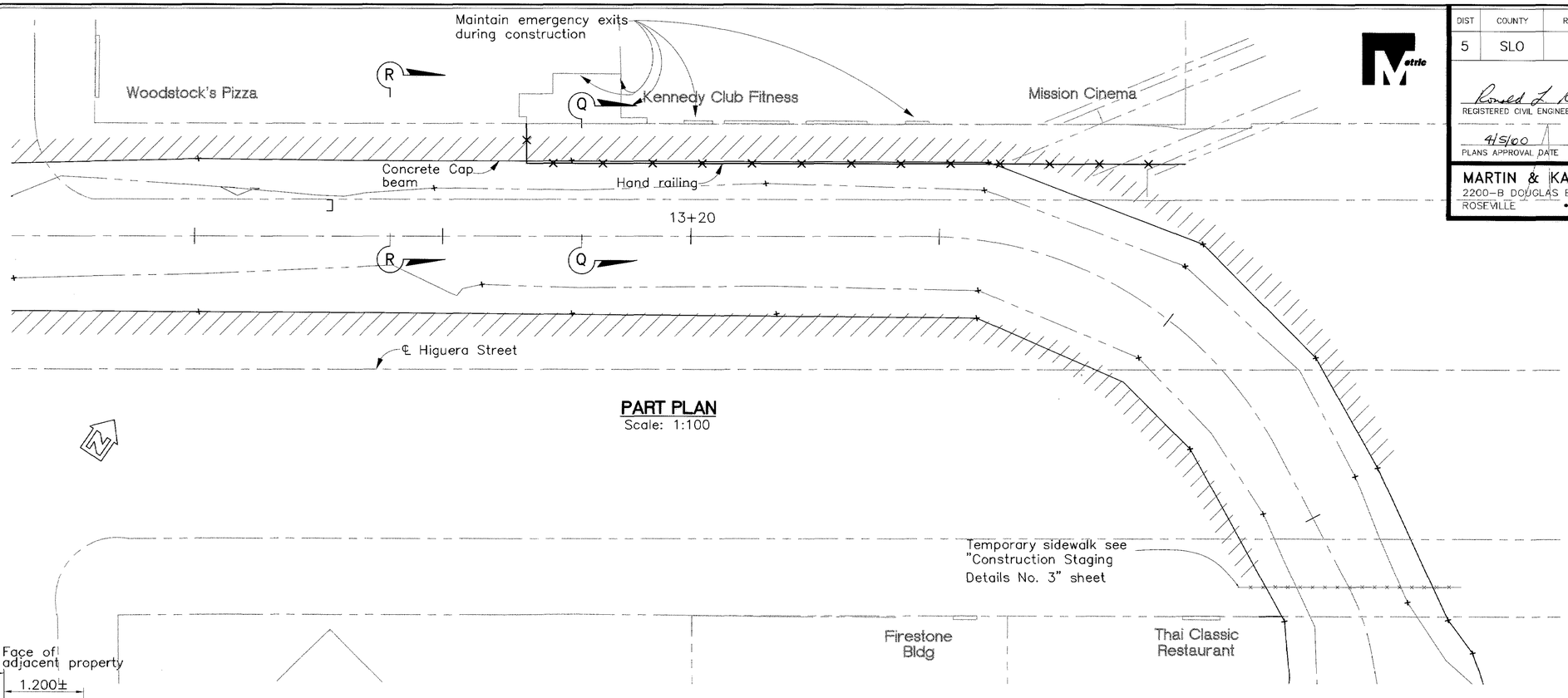

PART PLAN
Scale: 1:100

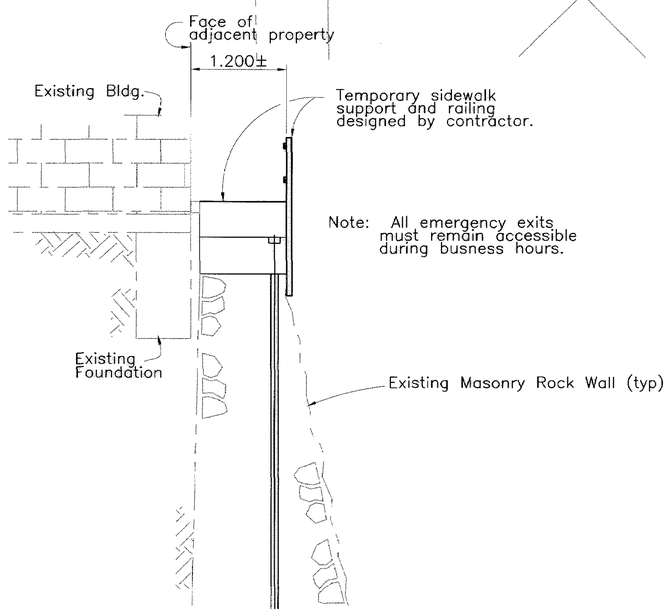

SECTION Q-Q
Scale: 1:50

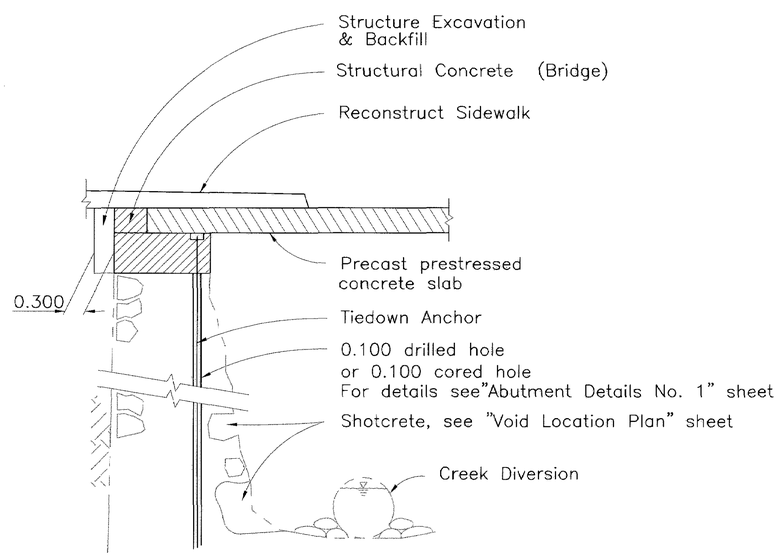

SECTION R-R
Scale: 1:50

LEGEND:

Temporary sidewalk hand railing

Masonry rock wall

The contractor shall verify all controlling field dimensions before ordering or fabricating any materials.

All dimensions are in meters unless otherwise noted.

N:\MKSRVR1\MK PROJECTS\1997\97017.00 HIGUERA STREET BRIDGE REHAB\100& Submittal\97017-MD.dwg 3-17-00

city of san luis obispo

HIGUERA STREET BRIDGE REPLACEMENT

FOR REDUCED PLANS ORIGINAL SCALE IS IN MILLIMETERS 0 20 40 60 80 100

APPROVED BY

CITY ENGINEER

DATE	3/2000
SCALE	As Noted
DESIGNED BY	R.F.
DRAWN BY	R.D., K.W.
CHECKED BY	R.R.
APPROVED BY	
UTILITIES DEPARTMENT	

CONSTRUCTION DETAILS

SPECIFICATION NO. 9367

FILE NO./LOCATION 0060 B

SHEET 39 OF 41

DIST	COUNTY	ROUTE	POST MILES TOTAL PROJECT	SHEET NO.	TOTAL SHEETS
5	SLO		-	40	41

REGISTERED CIVIL ENGINEER

4/5/00
PLANS APPROVAL DATE

REGISTERED PROFESSIONAL ENGINEER Ronald L. Rivett No. 31,269 EXP. 12/31/00 CIVIL STATE OF CALIFORNIA

MARTIN & KANE, INC.
2200-B DOUGLAS BLVD, #150
ROSEVILLE • CA 95661

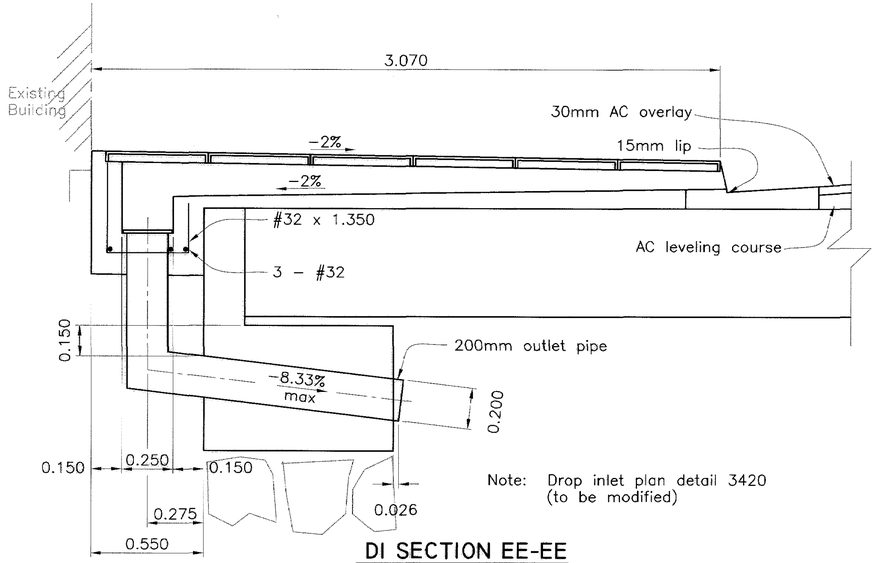

Note: Drop inlet plan detail 3420 (to be modified)

DI SECTION EE-EE
No Scale

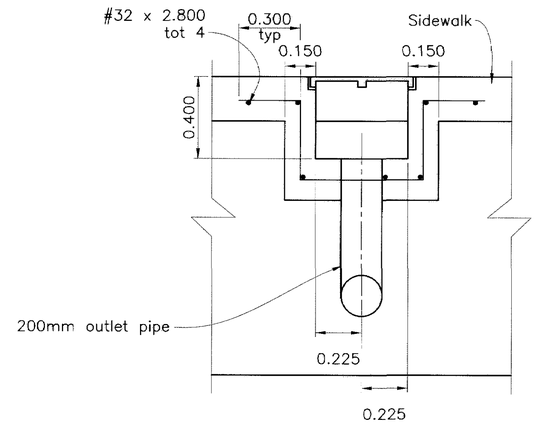

DI SECTION DD-DD
No Scale

For "Section FF-FF" see "Utility Details No.2" sheet

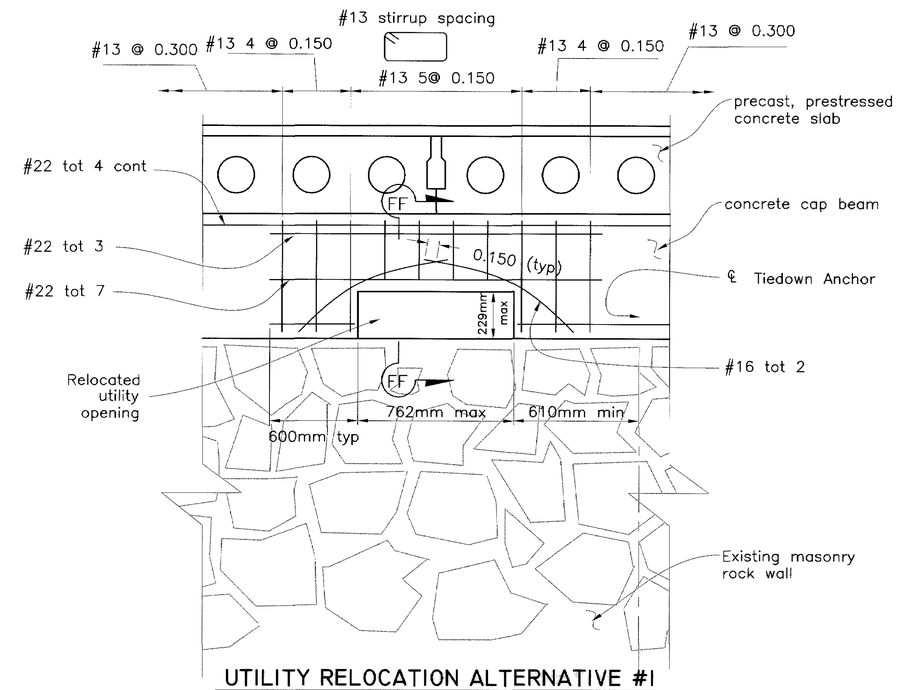

UTILITY RELOCATION ALTERNATIVE #1
No Scale

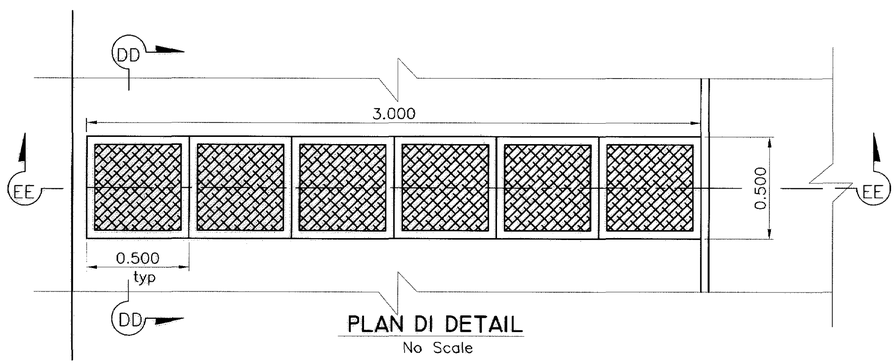

PLAN DI DETAIL
No Scale

Note: plan view and sections DD-DD, and EE-EE are for drop inlet (modified sidewalk underdrain) at Station 1+19±.

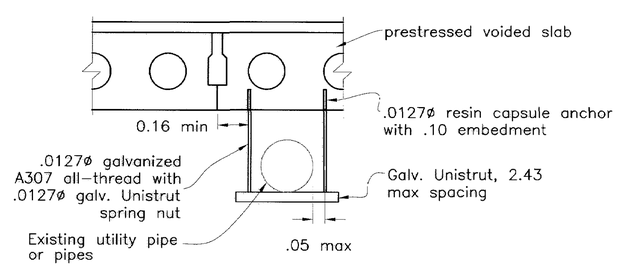

UTILITY PIPE SUPPORT DETAIL
No Scale

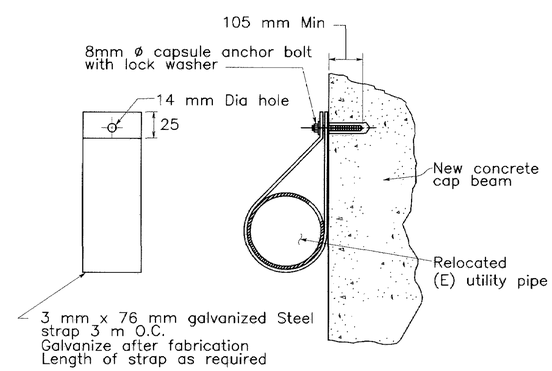

(E) UTILITY PIPE ANCHOR DETAIL
No Scale

Notes:

1. For Utility Relocation Alternative #2 see "Utility Details No.2" sheet.
2. Either Alternative #1 or Alternative #2 to be used for utility relocation as needed.
3. Utilities cannot be relocated so that they penetrate the top of the concrete cap beam.

The contractor shall verify all controlling field dimensions before ordering or fabricating any materials.

All dimensions are in meters unless otherwise noted.

NETWORK NEIGHBORHOOD\MKSERVER\PROJECTS\1997\97017.00 HIGUERA STREET BRIDGE REHAB\100% Submittal\97017-UD1.dwg 3-17-00

City of San Luis Obispo

HIGUERA STREET BRIDGE REPLACEMENT

APPROVED BY
CITY ENGINEER

DATE	3/2000
SCALE	As Noted
DESIGNED BY	R.F.
DRAWN BY	R.D., K.W.
CHECKED BY	R.R.
APPROVED BY UTILITIES DEPARTMENT	

UTILITY DETAILS NO. 1

SPECIFICATION NO. 9367
FILE NO./LOCATION 0060 B
SHEET 40 OF 41

DIST	COUNTY	ROUTE	POST MILES TOTAL PROJECT	SHEET NO.	TOTAL SHEETS
5	SLO		-	40	41

REGISTERED CIVIL ENGINEER

PLANS APPROVAL DATE

REGISTERED PROFESSIONAL ENGINEER Ronald L. Rivetz No. 31,269 EXP. 12/31/06 CIVIL STATE OF CALIFORNIA

MARTIN & KANE, INC.
2200-B DOUGLAS BLVD, #150
ROSEVILLE • CA 95661

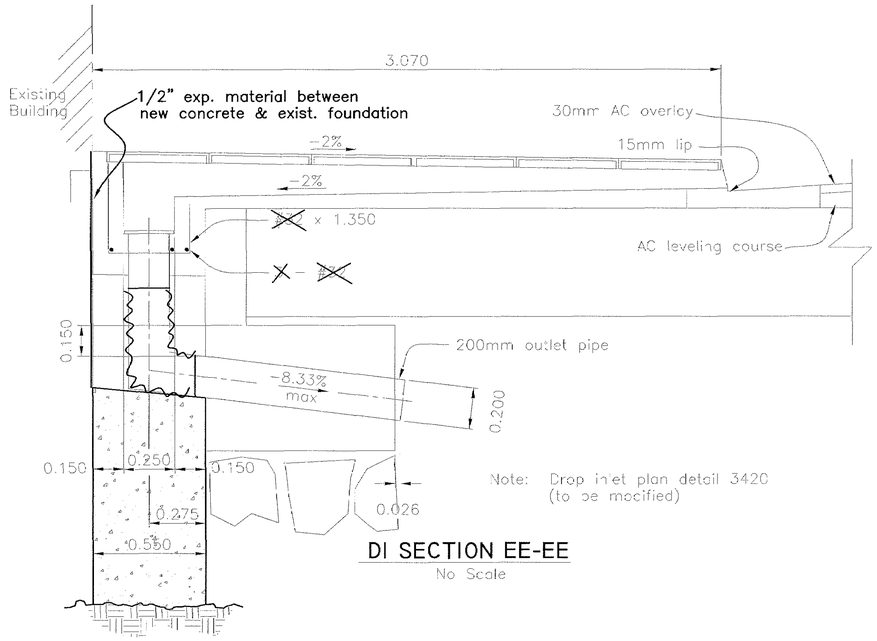

Note: Drop inlet plan detail 3420 (to be modified)

DI SECTION EE-EE

No Scale

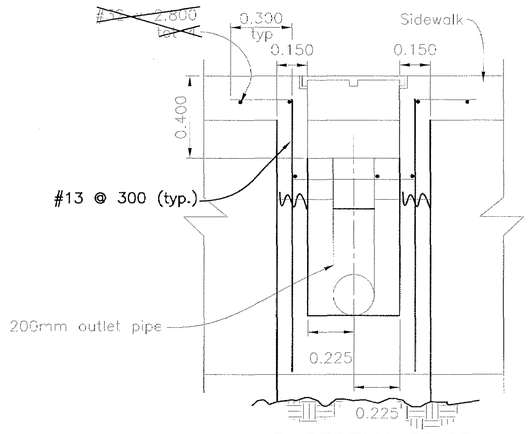

DI SECTION DD-DD

No Scale

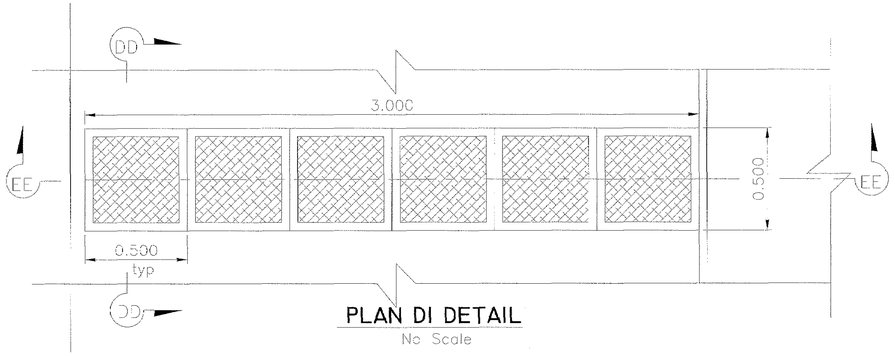

PLAN DI DETAIL

No Scale

Note: plan view and sections DD-DD, and EE-EE are for drop inlet (modified sidewalk underdrain) at Station 1+19±.

For "Section FF-FF" see "Utility Details No.2" sheet

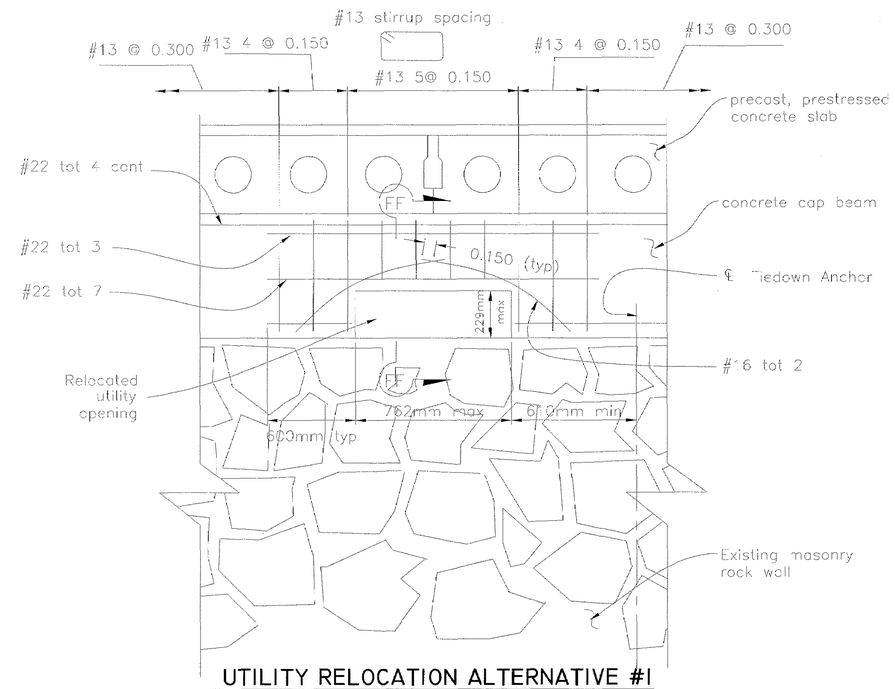

UTILITY RELOCATION ALTERNATIVE #1

No Scale

Note: Punch list item check all utilities in tunnel for supports

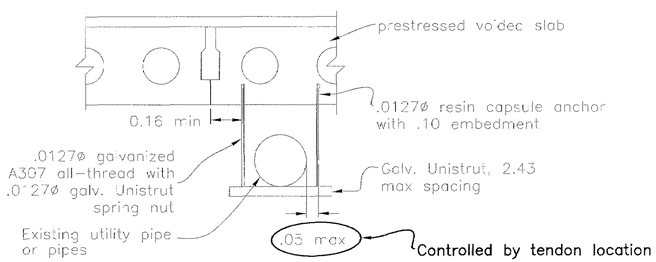

UTILITY PIPE SUPPORT DETAIL

No Scale

NOT USED

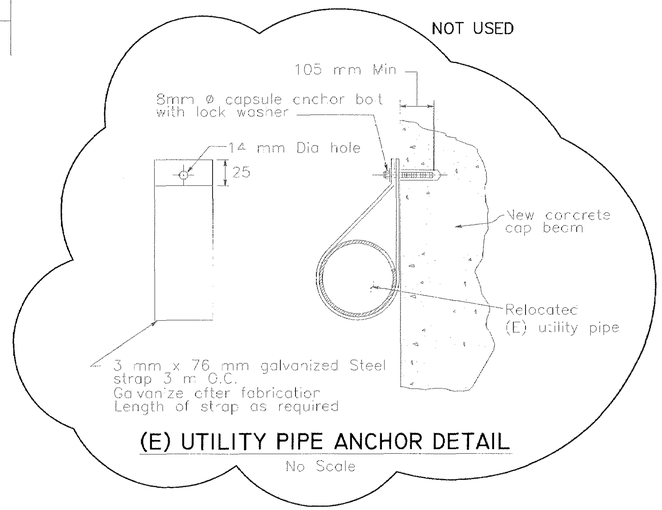

(E) UTILITY PIPE ANCHOR DETAIL

No Scale

Notes:

1. For Utility Relocation Alternative #2 see "Utility Details No.2" sheet.
2. Either Alternative #1 or Alternative #2 to be used for utility relocation as needed.
3. Utilities cannot be relocated so that they penetrate the top of the concrete cap beam.

The contractor shall verify all controlling field dimensions before ordering or fabricating any materials.

All dimensions are in meters unless otherwise noted.

RECORD DRAWING DATE: 3/3/02 BY: SR

city of san luis obispo

HIGUERA STREET BRIDGE REPLACEMENT

APPROVED BY

CITY ENGINEER

DATE	3/2000
SCALE	As Noted
DESIGNED BY	R.F.
DRAWN BY	R.D., K.W.
CHECKED BY	R.R.
APPROVED BY	
UTILITIES DEPARTMENT	

UTILITY DETAILS NO. 1

SPECIFICATION NO. 9367

FILE NO./LOCATION 0060 B

SHEET 40R OF 41

NETWORK NEIGHBORHOOD\MKSERVER\PROJECTS\1997\97017.00 HIGUERA STREET BRIDGE REHAB\100% Submittal\97017-UD1.dwg 3-17-00

DIST	COUNTY	ROUTE	POST MILES TOTAL PROJECT	SHEET NO.	TOTAL SHEETS
5	SLO		-	41	41

Ronald L. Rivett
REGISTERED CIVIL ENGINEER

4/5/00
PLANS APPROVAL DATE

REGISTERED PROFESSIONAL ENGINEER Ronald L. Rivett No. 31,269 EXP. 12/31/00 CIVIL STATE OF CALIFORNIA

MARTIN & KANE, INC.
2200-B DOUGLAS BLVD, #150
ROSEVILLE • CA 95661

Notes:

1. For Utility Relocation Alternative #1 see "Utility Details No.1" sheet.
2. Either Alternative #1 or Alternative #2 to be used for utility relocation as needed.
3. Utilities cannot be relocated so that they penetrate the top of the concrete cap beam.

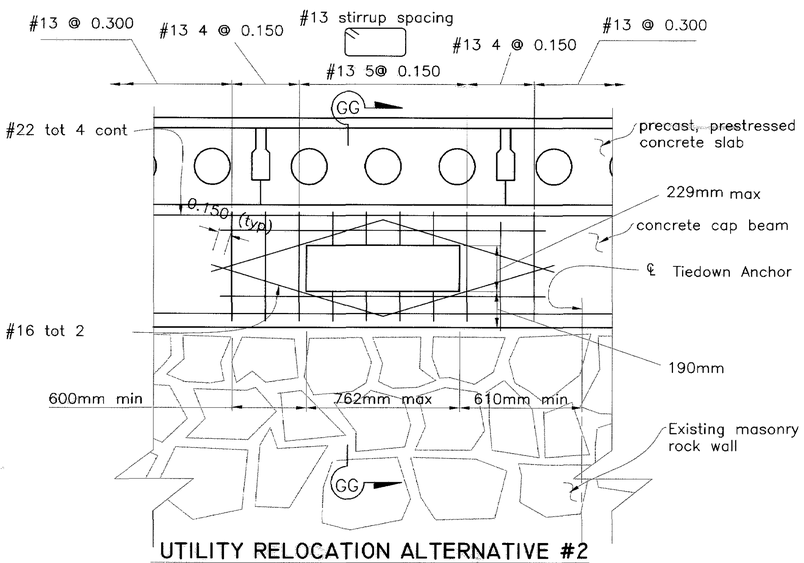

UTILITY RELOCATION ALTERNATIVE #2
No Scale

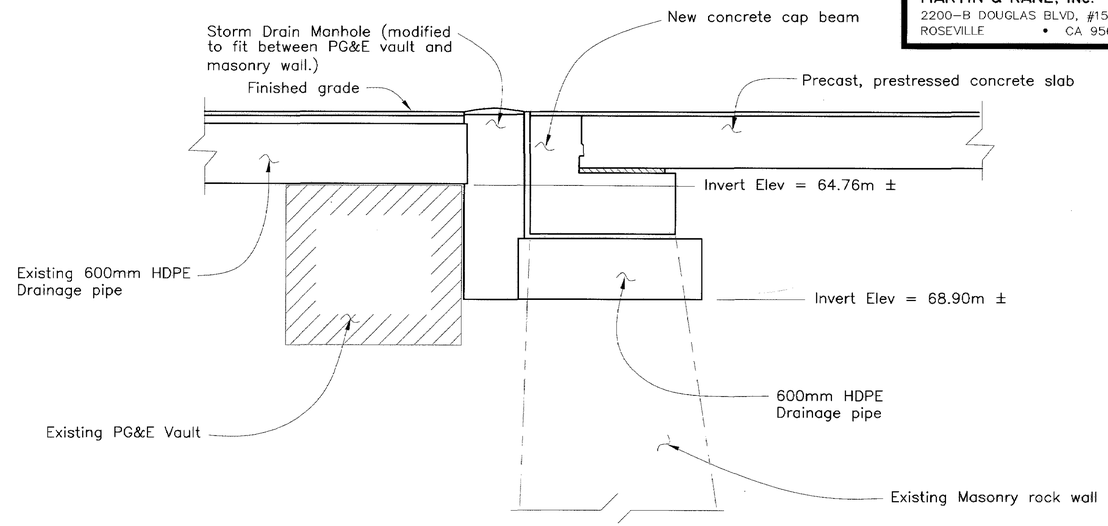

STORM DRAIN MANHOLE DETAIL
No Scale

NOTES:

1. Storm drain manhole per City Standard Plan Detail 3520 (to be modified).
2. Location and elevations are approximate, exact location to be determined by the Engineer.
3. 600mm HDPE Drainage pipe to be placed below new concrete cap beam.

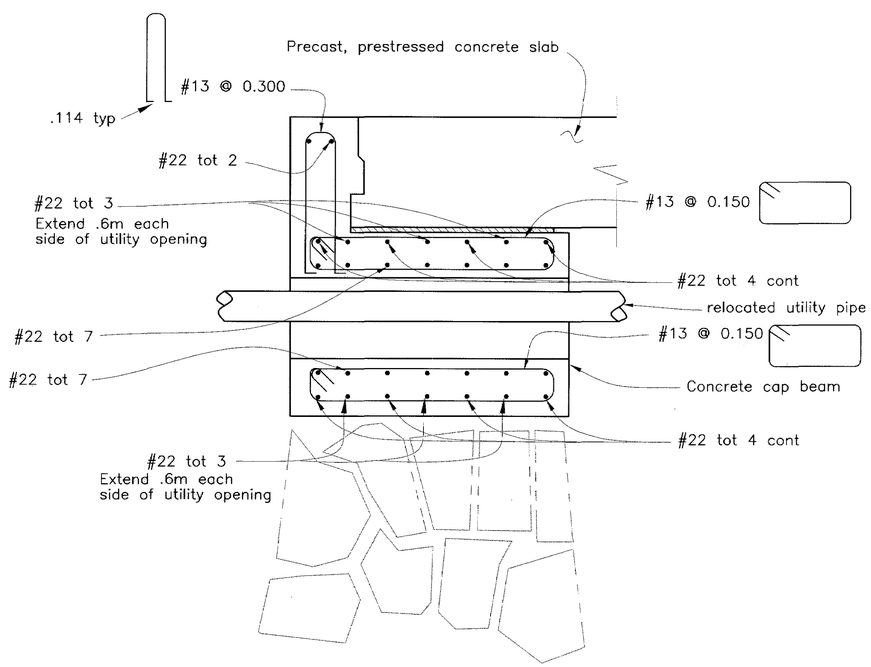

SECTION GG-GG
No Scale

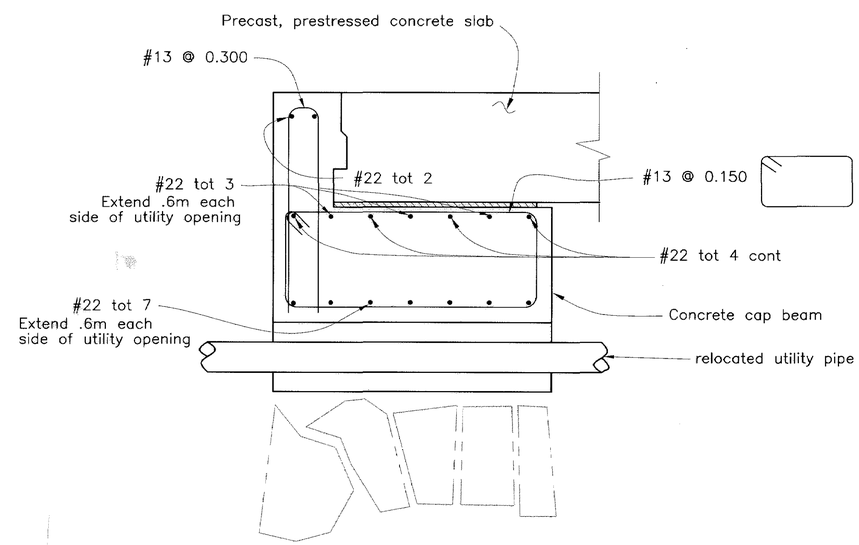

SECTION FF-FF
No Scale
For "Section FF-FF" see "Utility Details No. 1" sheet

The contractor shall verify all controlling field dimensions before ordering or fabricating any materials.

All dimensions are in meters unless otherwise noted.

City of San Luis Obispo

HIGUERA STREET BRIDGE REPLACEMENT

APPROVED BY
CITY ENGINEER

DATE	3/2000
SCALE	As Noted
DESIGNED BY	R.F.
DRAWN BY	R.D., K.W.
CHECKED BY	R.R.
APPROVED BY	UTILITIES DEPARTMENT

UTILITY DETAILS NO. 2

SPECIFICATION NO. 9367
FILE NO./LOCATION 0060 B
SHEET 41 OF 41

NETWORK NEIGHBORHOOD\MKSERVER\PROJECTS\1997\97017.00 HIGUERA STREET BRIDGE REHAB\100% Submittal\97017-UD2.dwg 3-17-00

64.06
0.61
63.45M = 208.18'
BOTT. OF CAP BEAM

No. 5505
Engineer's Computation Pad

SEWER LINE NEAR MO'S

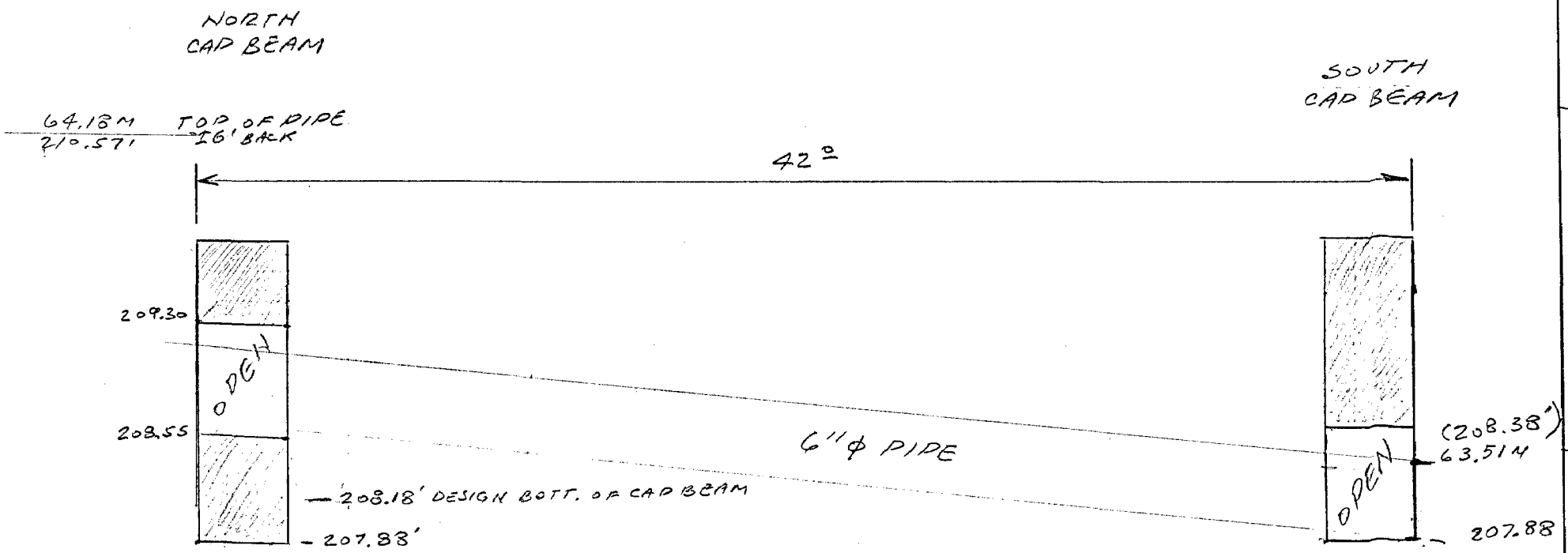

1'

8'

208.55
207.88
0.67' = 8"

MAX. GRADE = $\frac{8''}{42'}$ = 0.19"/FT = 3/16"/FT (MIN)

SEWER LINE

(S)
@ RT. ABUT — 63.51 — 4"φ

Δ = 0.37 M

(N)
LT. ABUT — 64.18 — 4"φ

FROM BILL 8-30-00
DISTANCE BACK OF FTGS = 42"

10-13-00
FROM BILL

CURB P-LINE @ WOODSTOCK PIZZA

			AS BUILT	
			65.50	DESIGN
+5.33	220.23		214.90	TBM 0+92.8
1+08.07	-5.16	215.07	65.55	(65.53) @ C/F PROD.
1+10.46	-5.15	215.08	65.556	(65.53) @ BLD FACE
1+17.07	-4.88	215.35	65.64	(65.63)
1+24.69	-4.52	215.71	65.75	(65.74)

ELEV CHECK @ CF E-2118 10-6-00 Bill Gary

			AS BUILT		PLAN GRADE			
℄ Hovern	+7.48	219.25			211.80	TBM	CP	MOES
0+52		-7.19	212.09	64.65	64.21 + 0.39 = 6	4.60		∴ 2" HIGH
0+54.73		-6.98	212.30	64.71	64.27 + 0.39 = 6	4.66		∴ 2" HIGH
0+62.35		-6.37	212.91	64.89	64.45 + 0.39 = 6	4.84		∴ 2" HIGH
0+69.97		-5.90	213.38	65.04 = 65.01				
0+77.59		-5.35	213.93	65.21	64.78 + 0.39 =	65.17		∴ 1½" HIGH
0+85.21		-4.75	214.53	65.39	64.97 + 0.39 =	65.36		∴ 1½" HIGH
0+92.83		-4.38	214.90	65.50	65.11 + 0.39 =	65.50		✓

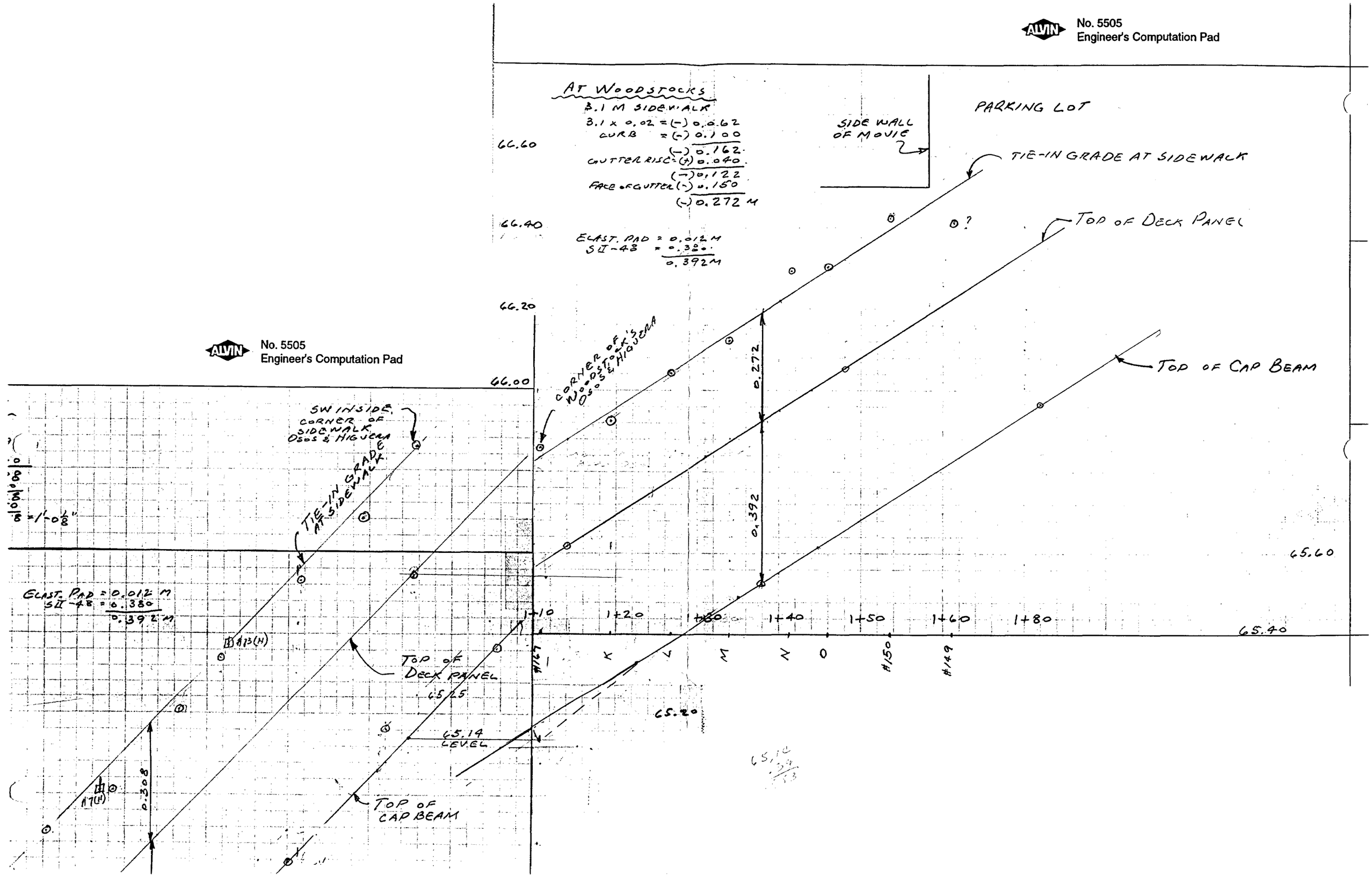

ALVIN No. 5505
Engineer's Computation Pad

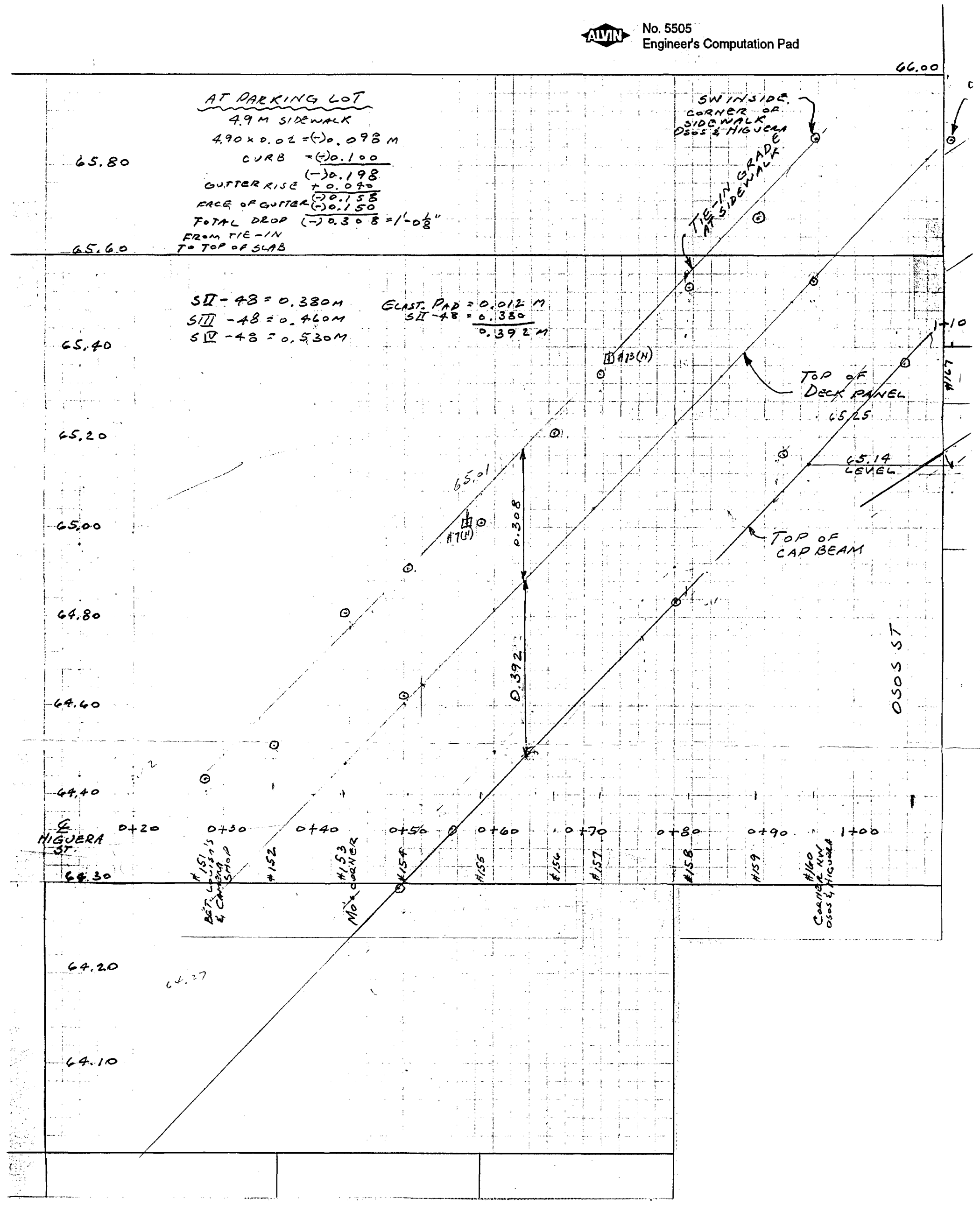
66.00
AT PARKING LOT
4.9 M SIDEWALK
4.90 x 0.02 = (-)0.098 M
CURB = (-)0.100
(-)0.198
GUTTER RISE + 0.040
(-)0.158
FACE OF GUTTER (-)0.150
TOTAL DROP (-)0.308 = 1'-0 1/8"
FROM TIE-IN TO TOP OF SLAB
65.80
65.60
SW INSIDE CORNER OF SIDEWALK OSOS & HIGUERA
TIE-IN GRADE AT SIDEWALK
SII - 48 = 0.380M
SIII - 48 = 0.460M
SIV - 48 = 0.530M
ELAST. PAD = 0.012 M
SII - 48 = 0.380
0.392 M
65.40
#13(H)
TOP OF DECK PANEL
65.25
65.20
65.01
65.14 LEVEL
65.00
#7(H)
0.308
TOP OF CAP BEAM
64.80
0.392
OSOS ST
64.60
64.40
℄ HIGUERA ST.
0+20
0+30
0+40
0+50
0+60
0+70
0+80
0+90
1+00
#151
#152
#153
#154
#155
#156
#157
#158
#159
#160
BET. LOUISA'S & CAMERA SHOP
MO'S CORNER
CORNER NW OSOS & HIGUERA
64.30
64.20
64.27
64.10

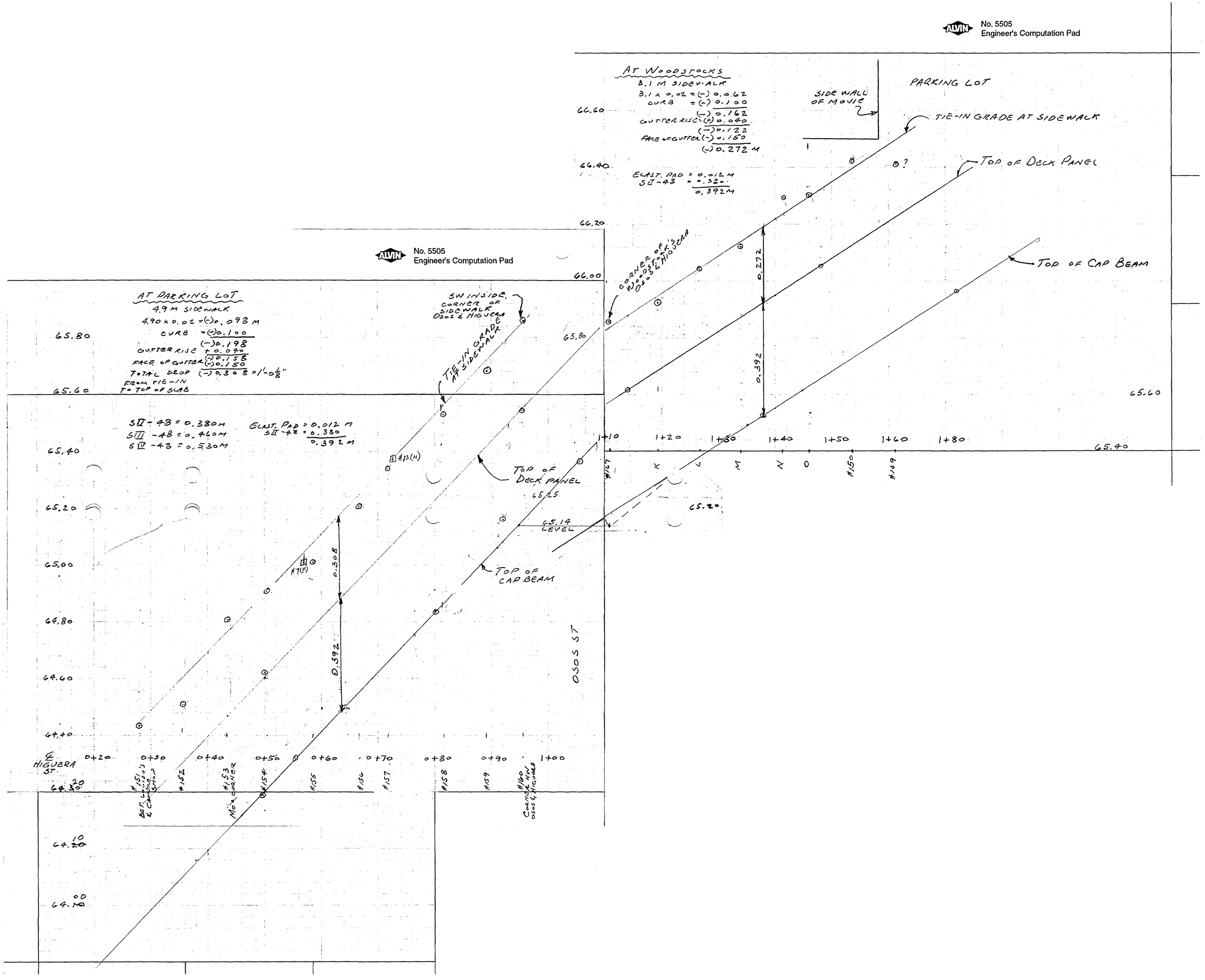

No. 5505
Engineer's Computation Pad